U.S. DEPARTMENT OF COMMERCE / Environmental Science Services Administration

WEATHER BUREAU ENGINEERING HANDBOOK NO.10

Hydrologic Equipment

WEATHER BUREAU ENGINEERING HANDBOOK (EHB-10)

UNITED STATES DEPARTMENT OF COMMERCE
National Oceanic and Atmospheric Administration
NATIONAL WEATHER SERVICE
Silver Spring, Md. 20910

March 14, 1979

OA/W514/TWD

TO: All NWS Regional Headquarters, Engineering Divisions, Area Electronics Supervisors, and Electronics Technicians

FROM: OA/W51 - J. M. St. Clair

SUBJECT: Transmittal Memorandum for Engineering Handbook No. 10, Issuance 79-1

1. Material Transmitted:

Revised Indexes for Engineering Handbook No. 10.

2. Summary:

The revised indexes should be inserted in the appropriate places in EBB-10 and the replaced indexes discarded. The only deletion of this issuance is that of Hydrologic Gaging Maintenance Note No. 11, "Damage of Scanner Boards While in Transit," dated April 29, 1965. Discard this deleted maintenance note. The dates of some maintenance notes, modifications, and maintenance schedules have been changed to reflect the previous dates of the notes, mods, and schedules. The previous dates on these publications were those of transmittal memorandums associated with them, and are not to be used for reference.

3. Effect on Other Instructions:

Replaces all previous EHB-10 Indexes.

NATIONAL WEATHER SERVICE
OFFICE OF SYSTEMS OPERATIONS
ENGINEERING DIVISION
SILVER SPRING, MARYLAND

HYDROLOGIC EQUIPMENT

ENGINEERING HANDBOOK NO. 10

HYDROLOGIC EQUIPMENT

Table of Contents

		Page	Section
1.	Equipment Manuals	1	1.0
	River Gages	1	1.1
	Precipitation Gages	1	1.2
	Tide Gages	1	1.3
	Deleted	1	1.4
	ARC System	1	1.5
	LARC System	1	1.6
2.	Equipment Maintenance Notes	1	2.0
	Hydrologic Gaging	1	2.1
	Tide Gaging	1	2.2
	Automatic Hydrologic Observing System (AHOS)	1	2.3
3.	Equipment Modification Notes	1	3.0
	Hydrologic Gaging	1	3.1
	Tide Gaging	1	3.2
	Automatic Hydrologic Observing System (AHOS)	1	3.3
	Deleted	1	3.4
	Deleted	1	3.5
4.	Equipment Maintenance Schedules	1	4.0
	River Gages	1	4.1
	Precipitation Gages	1	4.2
	Tide Gages	1	4.3
	Deleted	1	4.4
	Automatic Hydrologic Observing System (AHOS)	1	4.5

PART I HYDROLOGIC EQUIPMENT (EHB-10)

1. Equipment Manuals. Equipment or systems manuals are provided with each piece of operational equipment used in the National Weather Service (NWS). Each manual includes sufficient instructions so that technicians not familiar with the equipment can satisfactorily accomplish installation, necessary adjustments and calibration, activation, routine and emergency maintenance, and can easily identify components for ordering replacements. As a minimum, manuals contain information regarding (a) description and characteristics of the equipment; (b) siting and installation requirements; (c) activation, adjustment, and operation; (d) description of circuits utilized; (e) preventive and troubleshooting maintenance procedures, including resistance and voltage measurements and mechanical adjustments; (f) detailed circuit diagrams; (g) detailed parts list indicating parts numbers, together with electrical and mechanical descriptions.

Manuals are issued by the NWS Office of Systems Operations Engineering Division whenever new equipment is installed, when sufficient changes in manual material require a complete revision, or by request from authorized personnel whose responsibilities have changed, thus requiring their having access to additional technical material. Manuals will normally be revised when sufficient change in the material is brought about through equipment modification, change in technical procedures and from suggestions obtained from the field requesting clarification of vague or erroneous information.

Distribution of equipment manuals in the hydrologic equipment area is made on a selective basis. Normally only those electronics technicians actually maintaining the equipment will be issued manuals. One copy is provided with the equipment and remains in the custody of the station.

All equipment manuals will be numerically coded so as to be keyed to the appropriate program area handbook. The indexes contained in Part I for the various systems and equipment manuals indicate the numbers assigned to a particular manual.

As new manuals are obtained, they will carry the coded number on the cover as a reference.

The recipient of equipment manuals will be responsible for their upkeep as regards filing of revised material and ensuring that they are current. Area electronics supervisors will periodically check electronics technicians' manuals for completeness and have them request any revisions that are missing. Request for manuals should be made through the regional headquarters to the NWS Office of Systems Operations Engineering Division (ATTN: W/OSO32). Manuals should be requested only for equipment under the technician's responsibility.

U.S DEPARTMENT OF COMMERCE
National Oceanic and Atmospheric Administration
NATIONAL WEATHER SERVICE
Silver Spring, Md. 20910

W/OTS141 - BGM

OCT 1 1983

TO: Addressees List Below

FROM: W/OTS1 - J. Michael St. Clair

SUBJECT: AHOS-S Satellite Channel Reassignment and Equipment Replacement

REF: 1. W/OTS141:GW memorandum, dated July 20, 1983; similar subject
2. W/OTS141:RWB memorandum, dated May 11, 1983; similar subject

ACTION: Complete AHOS-S Satellite Equipment Replacement Installations by July 1, 1984

The Handar Multiple Access Data Acquisition System, Model 540A, has been procured to meet new frequency, time slot, and satellite channel realignment requirements of NESDIS. This procurement will also eliminate chronic logistics problems with the aging Magnavox Data Collection Platform.

The attached Technical Information Package (TIP) provides useful information for the AHOS-S Satellite equipment replacement installations. Publication of a modification note containing hardware and programming instructions will be distributed to all holders of EHB-10. Handar systems are being delivered by the manufacturer directly to field sites. These systems can easily be installed using the Handar manual and training material. The TIP provides supplementary information.

This TIP is being sent to all AES's responsible for Handar sites. The AES should forward this information to the appropriate el tech(s) in his area.

Please ensure that the Handar systems are installed by July 1, 1984.

Addressees:
W/ER72 - A. Simpkins
W/SR72 - D. Blevins (acting)
W/CR72 - J.Taylor
W/WR72 - D.Wilson
W/AR72 - D. Hobart
W/PR72 - M. Keyes
AT/GSM42 - J. Houston
All AES's with AHOS-S Sites

cc:
W/OTS11 - M. Nikolaiev
W/OTS13 - H. Hoppe
W/OTS14 - S. Loring
W/OTS21x3 - J. Schiesl
W/OTS41 - T. Titus
W/TC - R.Brauch

TECHNICAL INFORMATION PACKAGE

FOR

HANDAR MULTIPLE ACCESS DATA ACQUISITION SYSTEM

November 1983
NWS - W/OTS
Engineering Division
Field Engineering Support Branch

TECHNICAL INFORMATION PACKAGE
FOR
HANDAR MULTIPLE ACCESS DATA ACQUISITION SYSTEM

Page

A. Introduction 1

B. Distribution, Installation, and Sparing 2

1. AHOS-S Installation 2
2. RAMOS Installation-Programming Set Distribution 2

C. Documentation 24

1. Instruction Manual 24
2. Special Drawings 24
3. Replacement Parts Information 42
4. EMRS Reporting 42
5. Special Reporting 45

D. Regional Training 45

E. Maintenance Policies 45

1. Maintenance Responsibility 45
2. On-Site-Repair 46
3. Station Sparing 46
4. Maintenance Schedule 46
5. Equipment Warranty 46
6. Test Equipment and Special Tools 47
7. Disposition of Old Equipment 47

F. Staffing Policies 47

1. Workforce Requirements 47

A. INTRODUCTION

The NESDIS schedule for realignment of satellite channel and time slot assignments is July 1, 1984. Realignment of satellite channel and time slot assignments are necessary due to an increase in the number of users and additional user requirements. Also, additional changes in policy and technology have eliminated the need for interrogated stations, greatly increased equipment capabilities, and allowed integration of separate equipment functions.

The NWS has initiated the replacement of AHOS-S equipment to avoid expensive factory retrofits necessary to comply with NESDIS requirements and to upgrade the AHOS-S equipment to more current technology. Existing Magnavox Data Collection Platform Radio Sets (DCPRS'S) and their Devices for Automatic Remote Data Collection (DARDC'S) will be replaced by the Handar Multiple Access Data Acquisition System, Model 540A. A new stainless steel interface enclosure replaces the old (DARDC) enclosure. A new Handar incremental encoder will replace all NWS-owned ADR river gages. The encoder will also be slaved to other agency (e.g., USGS) ADR river gages when applicable.

B. DISTRIBUTION, INSTALLATION, AND SPARING

1. AHOS-S Distribution

The Handar AHOS-S systems and programming sets are being delivered by the manufacturer directly to the field sites.

The auxiliary equipment consisting of cables, platform mounting brackets, sensor wiring enclosure, incremental encoder with interface card, mounting bracket, mounting hardware, gears and gear chains, and solar panel will be distributed to each field El Tech station as this equipment is received from various vendors.

2. AHOS-S Installation

Site requirements for Data Collection Platform (DCP) replacements were solicited in the memorandum provided in Figure 1. At the time of TIP publication, specific requirements weren't yet received from Regions 1 and 3. DCP replacement requirements for other regions, estimated shipping dates and local sparing provisions are shown in Table 1. Installation drawings are provided in the documentation section of this TIP. The site requirements survey also provided additional "site information files" which are contained as general information in Table 2.

3. RAMOS Installation - Programming SET Distribution

Stations maintaining both AHOS-S and RAMOS installations will receive a Programming Set under the AHOS-S distribution of Table 1. Stations maintaining RAMOS installations only will receive a programming set as indicated in Table 3.

UNITED STATES DEPARTMENT OF COMMERCE
National Oceanic and Atmospheric Administration
NATIONAL WEATHER SERVICE
Sliver Spring, Md 20910

May 11, 1983 W/OTS141:RWB

TO: Chiefs, Electronics Branches, NWS Eastern, Southern , Central, Western, and Alaska Regions

FROM: W/OTS14 William J. Von Feldt

SUBJECT: Required Station Authorization Information for AHOS-S Magnavox-Handar DCP Replacement

ACTION: Return completed forms to W/OTS141-RWB by July 1, 1983

The IRAC, NESS, and AHOS-S maintenance and equipment information forms (Attachment 5) for each of the highlighted Data Collection Platform (DCP) sites listed on-Attachment 1, must be completed and returned to W/OTS141 to obtain the necessary station authorizations prior to activating the new Handar DCP replacements. Please provide, where highlighted, the following:

1. missing information,
2. verification of information, and make necessary corrections.

We will calculate (IRAC FORM) the antenna azimuth and elevation from the site coordinates furnished by you.

Attachments: (5)
NESS Listing of Assigned Frequencies and Reporting Times
2: EMRS AHOS-S Information
3. B-44 Station Information
4. Sample of Forms
5. IRAC, NESS, AHOS-S Forms

cc:(w/o attachment)
W/OTS13 - H. Hoppe
W/OTS21x3 - J. Schiesl

Figure 1

TABLE 1 - DCP Requirements	DCP	SPARE DCP	ADR PCB	SPARE PCB	F&P PRECIP	ENCODER PCB	SPARE ENCODER PCB	TBG PRECIP	ENCODER	SPARE ENCODER	INTERFACE BOX	PROGRAMMER	RAMOS OVERLAP	SHIPPING DATE & RAMOS OVERLAP
Region 2														
Albuquerque N M		S					S			S		X	X	
Albuquerque	X					X			X		X			
Carlsbad Dam 3	X					X		X	X		X			
Gila 7NE	X					X		X	X		X			
Jarosa Co/NM State Line	X					X			X		X			
Marathon	X					X		X			X			
Pecos 9N	X					X		X	X		X			
Del Rio TX		S					S			S		X		
Bagget Ranch	X					X		X			X			
Bisset Ranch	X					X		X			X			
Bud Cox Ranch	X					X		X			X			
Comstock 22NE	X					X		X	X		X			
Dreyden 14S	X					X		X	X		X			
Joe Chandler Ranch	X					X		X	X		X			
Juno 5s	X					X		X	X		X			
Pandale Crossing	X					X		X	X		X			
New Orleans (RAMOS) LA														
SR TOTALS	14	2				14	2	12	10	2	14	2	1	

TABLE 1 - DCP Requirements	DCP	SPARE DCP	ADR PCB	SPARE PCB	F&P PRECIP	ENCODER PCB	SPARE ENCODER PCB	TBG PRECIP	ENCODER	SPARE ENCODER	INTERFACE BOX	PROGRAMMER	RAMOS OVERLAP	SHIPPING DATE & RAMOS OVERLAP
Region 4														
Astoria OR		S		S								X		
Jewell	X		X		X						X			
Boise ID		S		S			S			S		X	X	
Centerville	X		X		X						X			
Hot Springs	X					X			X		X			
Great Falls MT		S		S								X		
Essex	X		X		X						X			
Medford OR		S		S								X		
Illahe	X		X		X						X			
Butte Falls	X		X		X						X			
Steamboat	X		X		X						X			
Pendleton OR		S		S			S			S		X		
Heppner	X		X		X						X			
Halfway	X		X		X						X			
Imnaha	X		X		X	X			X		X			
Joseph	X		X		X						X			
Phoenix AZ		S		S								X	X	
Cibeque	X		X		X						X			
Pocatello ID		S		S			S			S		X		
Topaz	X		X		X	X			X		X			

Region 4 (cont'd)		DCP	SPARE DCP	ADR PCB	SPARE PCB	F&P PRECIP	ENCODER PCB	SPARE ENCODER PCB	TBG PRECIP	ENCODER	SPARE ENCODER	INTERFACE BOX	PROGRAMMER	RAMOS OVERLAP	SHIPPING DATE & RAMOS OVERLAP
Salem	OR		S		S								X		
Valsetz		X		X		X						X			
Seattle	WA		S		S								X		
Snowqualmie Falls		X		X		X						X			
Upper Baker Dam		X		X		X						X			
Spokane	WA		S		S			S			S		X		
Pierce		X		X		X						X			
Prichard		X		X		X	X			X		X			
Yakima	WA		S					S			S		X		
Mazama		X					X			X		X			
Nighthawk		X					X			X		X			
WR Totals		20	11	17	10	17	6	5		6	5	20	11	2	

TABLE 1 - DCP Requirements	DCP	SPARE DCP	ADR PCB	SPARE PCB	F&P PRECIP	ENCODER PCB	SPARE ENCODER PCB	TBG PRECIP	ENCODER	SPARE ENCODER	INTERFACE BOX	PROGRAMMER	RAMOS OVERLAP	SHIPPING DATE & RAMOS OVERLAP
Region 5														
Anchorage AK		S					S			S		X	X	
Anchorage 7SE	X					X			X		X			
Anchorage 1ENE														
Eagle River 1s														
Fairbanks AK		S		S			S			S		X	X	
Fairbanks 39ENE	X		X		X	X			X		X			
Fairbanks 9ENE	X		X		X	X			X		X			
Harding Lake	X		X		X	X			X		X			
Nenana						X			X		X			
Salchaket						X			X		X			
Stevens Villaqe 26WSW						X			X		X			
Juneau (RAMOS)														
AR Totals	4	2	3	1	3	7	2		7	2	7	2	2	

TABLE 1 - DCP Requirements	DCP	SPARE DCP	ADR PCB	SPARE PCB	F&P PRECIP	ENCODER PCB	SPARE ENCODER PCB	TBG PRECIP	ENCODER	SPARE ENCODER	INTERFACE BOX	PROGRAMMER	RAMOS OVERLAP	SHIPPING DATE & RAMOS OVERLAP
Support Functions														
NWSTC	X	X	X		X							X		
NLSC	X											X		
T&ED	X				X	X			X			X		
NRC	X													
Engineering	X	X	X	X		X	X			X	X			

REGION	STATION NAME	STATE	ORG CODE	SID	AES AREA
2	ALBUQUERQUE	NM	WP9365	ABQ	A

MAILING ADDRESS

NATL. WEATHER SERV. FORECAST OFF
MUNICIPAL AIRPORT
P. 0. BOX 9025
ALBUQUERQUE, NM 87119

SHIPPING ADDRESS

NAT. WEATHER SERV. FORECAST OFF
NWS/FAA BLDG.
MUNICIPAL AIRPORT
ALBUQUERQUE, NM 87119

AES	REED WILLIRM R	PNONE: 8-474-2170
ELTEC	FRANCO ROBERT L	PHONE: 8-474-2170
ELTEC	LYONS JOE M	PHONE: 8-474-2170

REGION LOCATION	REMOTE S810	ELEVATION (FEET)	COURDINATES		PLATFORM	TRANSLATOR	SATELL I TE	REPORT TIME	PARAMETER	SENSOR	OWNER
ALBUQUERQUE	ALQN5	4946	35:06N	106:42W	15CD57DO	HANDAR 540A	EAST	0046	RIVER	F&P ADR	USGS
CARLSBAD DAM 3	CSBN5	3171	32:31N	104:2OM	15CFE1AA	HANDAR 540A	EAST	0057	RIVER PRECIP	F&P ADR T B G	USGS NWS
GILA 7NE	GILN5	4655	33:04N	108:32W	I5CDC2B2	HANDAR 540A	EAST	0050	PRECIP RIVER	T B G F&P ADR	NWS USGS
JAROSA, CO	JSOC2	7390	37:00N	105:43W	15CDE45E	HANDAR 540A	EAST	0051	RIVER	F&P ADR	USGS
MARATHON	CBMN5	3820	32:27N	104:32W	15CC1620	HANDAR 540A	EAST	0043	PRECIP	T B G	NWS
PECOS 9N	PCON5	7512	35:42N	105:40W	15CD713C	HANDAR 540A	EAST	0047	PRECIP RIVER	T B G F&P ADR	NWS USGS

TABLE 2 SITE INFORMATION FILES

MEDIUM	STATION NAME	STATE			
2	DEL RIO	IX	WP9261	DRI	E

MAILING ADDRESS

NAT'L WEATHER SERVICE OFFICE
BOX I047
INTERNATIONAL AIRPORT
DEL RIO TX 78840

SHIPPING ADDRESS

NAT'L WEATHER SERVICE OFFICE
INTERNATIONAL AIRPORT
DEL RIO TX 78840

AES	FAIN EDGAN E	PHONE: 8-730-5025
SET	HARRISON W H IV	PHONE: 8-730-7238
ELTEC	VACANCY	PHONE 8-730-7238

REMOTE LOCATION	REMOTE SID	ELEVATION (FEET)	CORDINATES	PLATFORM	TRANSLATOR	SATELLITE	REPORT TIME	PARAMETER	SENSOR	OWNER
MAGGET RANCH	JNUT2	2100	30:2IN 101:02W	15CD8188	HANDAR 540A	EAST	0048	PRECIP	TBG	NWS
DISSET RANCH	BRHT2	2600	30:59N101:14W	15CCF5D2	HANDAR 540A	EAST	0045	PRECIP	TBG	NWS
BUD COX RANCH	PBCT2	2400	30:34N 101:28W	15CE7632	HANDAR 540A	EAST	0056	PRECIP	TBG	NWS
COMSTOCK 22NE	CTKT2	1500	29:52N100:53W	15CE7632	HANDAR540A	EAST	0052	PRECIP RIVER	TBG F&P ADR	OTHER OTHER
DREYDEN 148	UYN12	1500	29:49N 102:10W	15CF37C2	HANDAR540A	EAST	0054	PRECIP RIVER	TBG F&P ADR	OTHER OTHER
JOE CHANDLER RANCH	SF1T2	2000	30:28N101:43W	15009034	HANDAR540A	EAST	0044	PRECIP RIVER	TBG F&P ADR	NWS USGS
JUNO 58	JNXT2	1850	30:04NI01:06W	15CF0258	HANDAR540A	EAST	0053	PRECIP RIVER	TBG F&P ADR	OTHER OTHER
PANDALE CROSSING	PDAT2	1850	30:0/N 101:34W	15CF/4C8	HANDAR540A	EAST	0055	PRECIP RIVER	TBG F&P ADR	OTHER OTHER

TABLE 2 SITE INFORMATION FILES

REGION	STATION NAME	STATE	ORD CODE	SID	AES AREA
4	ASTORIA	OR	WT979 1	AST	2

MAILING ADDRESS

NAT'L WEATHER SERVICE OFFICE
ASTORIA
CLATSOP COUNTY AIRPORT
ROUTE 1, BOX 941
WARRENTON OR 97146

SHIPPING ADDRESS

NAT'L WEATHER SERVICE OFFICE
ASTOR I A
CLATSOP COUNTY AIRPORT
ROUTE 1
ASTORIA, OR 97146

AES	DIRD JACK R	PHONE: 8-424-4612
ELTEC	WATKINS WALTER E	PHONE: 503-861-2722

REMOTE LOCATION	REMOTE SID	ELEVATION (FEET)	COORDINATES	PLATFORM	TRANSLATOR	SATELLITE	REPORT TINE	PARAMETER	SENSOR	OWNER
JEWEL	JEL03	570	45:56N 123:31W	15D066B2	HANDAR 540A	WEST	0025	PRECIP	F&P	NWS

TABLE 2 SITE INFORMATION FILES

REGION	STATION NAME	STATE	ORG CODE	SID	AES AREA
4	DOISE	ID	WT9681	BOI	7

MAILING ADDRESS

NAT'L WEATHER SERV. FORECAST OFF
BOISE INTERAGENCY FIRE CENTER
ADMIN. BLDG.
3905 VISTA AVE.
BOISE, ID 83705

SHIPPING ADDRESS

NAT L. WEATHER SERV. FORECAST OFF
BOISE INTERAGENCY FIRE CENTER
ADMIN BLDG.
3905 VISTA AVE.
BOISE, ID 83705

AES	VACANCY	PHONE: 8-554-9865
SET	CARLSON PAUL R	PHONE: 8-554-9865
ELTEC	FLIEDER WILLIAM J	PNONE: 8-554-9865
ELTEC	BALANCE ELVIN H	PHONE: 8-554-9865

REMOTE LOCATION	REMOTE SID	ELEVATION (FEET)	COORDINATES		PLATFORM	TRANSLATOR	SATELLITE	REPORT TIME	PARAMETER	8ENSOR	OWNER
CENTERVILLE	CVAI1	4300	43:57N	115:50W	15CD07AC	HANDAR 540A	WEST	0011	PRECIP	F&P	NWS
HOT SPRINGS	HOT1	2599	42:26N	115:43W	15CCE6A4	HANDAR 54OA	MST	0010	RIVER	F&P ADR	USGS

TABLE 2 SITE INFORMATION FILES

REGION	STATE NAME	STATE	ORG CODE	SID	AES AREA
4	GREAT FALLS	MT	WT9775	GTF	5

MAILING ADDRESS

NATL.WEATHER SERV.METEOR.OBSER
INTERNATIONAL AIRPORT ADMIN. BLDG.
GREAT FALLS, MT 59404

SHIPPING ADDRESS

NATL.WEATHER SERV.METEOR.OBSER
INTERNATIONAL AIRPORT ADMIN. BLDG.
GREAT FALLS, MT 59404

AES COURCHESIE NORMAN H PHONE: 8-585-1311

REMOTE LOCATION	REMOTE SID	ELEVATION (FEET)	COORDINATES	PLATFORM	TRANSLATOR	SATELLITE	REPORT TIME	PARAMETER	SENSOR	OWNER
ESSEX	ESXMO	3870	48:15N 113:32W	15DOBODA	HANDAR 540A	WEST	0027	PRECIP	F & P	NWS

TABLE 2 SITE INFORMATION FILES

REGION	STATION NAME	STATE	ORG CODE	SID	AES AREA
4	MEDFORD	OR	WT9597	MFR	2

MAILING ADDRESS

NAT'L WEATHER SERVICE OFFICE
MEDFORD-JACKSON COUNTY AIRPORT
MEDFORD, OR 97501

SHIPPING ADDRESS

NAT'L WEATHER SERVICE OFFICE
MEDFORD-JACKSON COUNTY AIRPORT
MEDFORD, OR 97501

AES	BIRD JACK R	PHONE: 8-424-4612
SET	0' NEILL STEVEN J	PHONE: 8-424-4612
ELTEC	EDE RONALD E	PHONE: 8-424-4612
ELTEC	MCKINZIE JAMES	PHONE: 8-424-4612
ELTEC	HOFFMAN DEWAYNE I	PHONE: 8-424-4612

REMOTE LOCATION	REMOTE SID	ELEVATION (FEET)	COORDINATES	PLATFORM	TRANSLATOR	SATELLITE	REPORT TIME	PARAMETER	SENSOR	OWNER
BUTT FALLS 1SE	DUR03	2500	42:32N 122:33W	15CD14DA	HANDAR 540A	WEST	0012	PRECIP	F&P	NWS
ILLAHE	ILH03	348	42:37N 124:03W	15CD624A	HANDAR 540A	WEST	0015	PRECIP	F&P	NWS
STEAMBOAT RS	STE03	1200	43:20N 122:43W	15DO75CA	HANDAR 540A	WEST	0026	PRECIP	F&P	NWS

TABLE 2 SITE INFORMATION FILES

REGION	STATION NAME	STATE	ORG CODE	SID	AES AREA
4	PENDLETON	OR	WT9688	PDT	2

MAILING ADDRESS

NAT"L WEATHER SERVICE OFFICE
AIR TERMINAL BLDG.
MUNICIPAL AIRPORT
P. O. BOX 668
PENDLETON, OR 97801

SHIPPING ADDRESS

NAT"L WEATHER SERVICE OFFICE
AIR TERMINAL BLDG.
MUNICIPAL AIRPORT
PENDLETON, OR 97801

A E S	BIRD JACK R	PHONE: 8-424-4612
ELTEC	THEIS RODERICK E	PHONE: 8-420-3218

REMOTE LOCATION	REMOTE SID	ELEVATION (FEET)	COORDINATES	PLATFORM	TRANSLATOR	SATELLITE	REPORT TIME	PARAMETER	SENSOR	OWNER
HALFWAY	HWY03	2670	44:52N 117:06W	15CD2140	HANDAR 54OA	WEST	0013	PRECIP	F&P	NWS
REPPNER	HPR03	1885	45:17N 119:31W	15CD3236	HANDAR 54OA	WEST	0014	PRECIP	F&P	NWS
IMNAHA	IMN03	1968	45:33N 116:50W	15CF5224	HANDAR 540A	WEST	0022	PRECIP RIVER	F&P F&P ADR	NWS USOS
JOSEPH	JDS03	4020	45:12N 117::13W	15CDA754	HANDAR 540A	WEST	0016	PRECIP	F&P	NWS

TABLE 2 SITE INFORMATION FILES

REGION	STATION NAME	STATE	ORG CODE	SID	AES AREA
4	PHOENIX	AZ	WT9278	PHX	8

MAILING ADDRESS

NATL. WEATHER SER.FORECAST OFF
SKY HARBOR INTL. AIRPORT
2633 E. BUCKEYE RD.
PHOENIX, AZ 05034

SHIPPING ADDRESS

NATL . WEATHER SERV. FORECAST OFF
SKY HARBOR INTL. AIRPORT
2633 E. BUCKEYE ROAD
PHOENIX, AZ 85034

AES	RAINSBARGER GAYLORD	PHONE: 8-261-6349
SET	VACANCY	PHONE: 8-261-6849
ELTEC	MEACHAM AUGUSTINE	PHONE: 8-261-6849
ELTEC	COFFIN LEAVITT E	PHONE: 8-261-6842

REMOTE LOCATION	REMOTE SID	ELEVATION (FEET)	COORDINATES		PLATFOFM	TRANSLATOR	SATELLITE	REPORT TIME	PARAMETER	SENSOR	OWNER
CIDEQUE	CIXBA3	4940	3405N	110:3OW	15CD92CE	HANDAR 540A	EAST	0049	PRECIP	F&P	NWS

TABLE 2 SITE INFORMATION FILES

REGION	STATION NAME	STATE	ORG CODE	SID	AES AREA
4	POCATELLO	ID	WT9578	PIH	7

MAILING ADDRESS

NAT'L WEATHER SERVICE OFFICE
MUNICIPAL AIRPORT
STAR ROUTE
Box 28
POCATELLO, ID 83202

SHIPPING ADDRESS

NAT'L WEATHER SERVICE OFFICE
MUNICIPAL AIRPORT
STAR ROUTE
POCATELLO, ID 83202

AES	VACANCY	PHONE:	8-554-9865
ELTEC	CAIN DAVID W	PHONE:	8-554-6901

REMOTE LOCATION	REMOTE SID	ELEVATION (FEET)	COORDINATES	PLATFORM	TRANSLATOR	SATELLITE	REPORT TIME	PARAMETER	SENSOR	OWNER
TOPAZ	TOP 11	4920	42:38N 112:05W	15D00354	HANDAR 540A	WEST	0024	PRECIP	F&P	NWS
								RIVER	F&P ADR	USGS

TABLE 2 SITE INFORMATION FILES

REGION	STATION NAME	STATE	ORG CODE	SID	AES AREA
4	SALEM	OR	WT9694	SLE	2

MAILING ADDRESS

NAT'L WEATHER SERVICE OFFICE
MCNARY FIELD
3030 - 25TH STREET, S.E.
SALEM, OR 97302

SHIPPING ADDRESS

NAT'L WEATHER SERVICE OFFICE
MCNARY FIELD
3020-25TH STREET, S.E.
SALAM, OR 97302

AES	BIRD JACK R	PHONE: 8-424-4612
ELTEC	BLANSCET KENNETH H	PHONE: 8-422-5840
ELTEC	GOODS WILLIAM H	PHONE: 8-422-5840

REMOTE LOCATION	REMOTE SID	ELEVATION (FEET)	COORDINATES	PLATFORM	TRANSLATOR	SATELLITE	REPORT TIME	PARAMETER	SENSOR	OWNER
VALSETZ	VLZ03	1155	44:50N 123:39W	15CE264E	HANDOR 540A	WEST	0017	PRECIP	F&P	NWS

TABLE 2 SITE INFORMATION FILES

REGION	STATION NAME	STATE	ORG CODE	SID	AES AREA
4	SEATTLE	WA	WT2793	SEA	1

MAILING ADDRESS

NAT'L WEATHER SERVICE OFFICE
FOR AVIATION
ADMINISTRATION BLDG. ROOM 500
SEATTLE-TACOMA INT'L AIRPORT
SEATTLE, WA 98112

SHIPPING ADDRESS

NAT'L WEATHER SERVICE OFFICE
FOR AVIATION
ADMINISTRATION BLDG.,ROOM 500
SEATTLE-TACOMA AIRPORT
SEATTLE, WA 98112

AES DEWING JOHN C. PHONE: 8-399-5789

REMOTE LOCATION	REMOTE SID	ELEVATION (FEET)	COORDINATES		PLATFORM	TRANSLATOR	SATELLITE	REPORT TIME	PARAMETER	SENSOR	OWNER
SNOWQUALMIE FALLS	SQUW1	-10	47:32N	121:50W	15CE6544	HANDAR 54OA	WEST	0020	PRECIP	F&P	NWS
UPPER BAKER DAM	UBRW1	690	48:39N	121:3OW	15CEE350	HANDAR 540A	WEST	0021	PRECIP	F&P	NWS

TABLE 2 SITE INFORMATION FILES

REGION	STATION NAME	STATE	ORG CODE	SID	AES AREA
4	SPOKANE	WA	WT2785	GEG	1

MAILING ADDRESS

NAT'L WEATHER SERVICE OFFICE
SPOKANE INTERNAT'L AIRPORT. BOX 19165
MC FARLAND RD & AIRPORT RD
SHIPPING-INSIDE DELIVERY
SPOKANE, WA 99219

SHIPPING ADDRESS

NAT'L WEATHER SERVICE OFFICE
SPOKANE INTL. AIRPORT
MC FARLAND RD & AIRPORT RD
SHIPPING-INSIDE DELIVERY
SPOKANE, WA 99219

AES	DEWING JOHN C	PHONE: 8-399-5789
SET	ELLENTUCH HELVYN N	PHONE 8-439-3761
ELTEC	PEARSALL JAMES T	PHONE: 8-439-3761

REMOTE LOCATION	REMOTE SID	ELEVATION (FEET)	COORDINATES	PLATFORM	TRANSLATOR	SATELLITE	REPORT TIME	PARAMETER	SENSOR	OWNER
PICRCE ID	PIRI1	3185	46:29N 115:47W	15CC73C6	HANDAR 540A	WEST	0009	PRECIP	F&P	NWS
PRICHARD ID	PRCI1	2485	4742N 115:28W	15CF973A	HANDAR 540A	WEST	0023	PRECIP RIVER	F & P F&P ADR	NWS NWS

TABLE 2 SITE INFORMATION FILES

REGION	STATION NAME	STATE	ORG CODE	SID	AES AREA
4	YAKIMA	WA	WT9781	YKM	1

MAILING ADDRESS

NAT"L WEATHER SERVICE OFFICE
YAKIMA AIR TERMINAL
2406 W WASHINGTON AVE.
YAKIMA WA 90903

SHIPPING ADDRESS

NAT'L WEATHER SERVICE OFFICE
YAKIMA AIR TERMINAL
2406 W. WASHINGTON AVE.
YAKIMA WA 98903

A E S	DEWIND JOHN C	PHONE: 8-399-5789
ELTEC	MARKARIAN ARAN	PHONE: 8-446-5882

REMOTE LOCATION	REMOTE SID	ELEVATION (FEET)	COORDINATES	PLATFORM	TRANSLATOR	SATELLITE	REPORT TIME	PARAMETER	SENSOR	OWNER
MAZAMA	MZAW1	2150	48:35N 120:24W	15CE43A8	HANDAR 540A	WEST	0018	RIVER	F&P ADR	NWS
NIGHTHAWK 2S	NITW1	1137	48:59N 119:33W	15CE50DE	HANDAR 540A	WEST	0019	RIVER	F&P ADR	USOS

TABLE 2 SITE INFORMATION FILES

REGION	STATION NAME	STATE	ORG CODE	SID	AES MEA
5	ANCHORAGE	AK	WV9903	ANC	

MAILING ADDRESS

NATL WEATHER SERV.METEOR.OBSER
INTERNATIONAL AIRPORT
BOX 6047
FIRST CLASS
ANCHORAGE, AK 99502

SHIPPING ADDRESS

NATL WEATHER SERV. METEOR. OBSER
PT. CAMPBELL,
ANCHORAGE INTERNAT'L AIRPORT
ANCHORAGE, AK

SET	BAKER TRAVIS L JR	PHONE: 907-243-2922
ELTEC	VACANCY	PHONE: 907-271-5102
ELTEC	VACANCY	PHONE: 907-271-5102
ELTEC	VACANCY	PHONE: 907-271-5102
ELTEC	VACANCY	PHONE: 907-271-5102
ELTEC	KELLIS WILLIAM M	PHONE: 907-243-2922
ELTEC	DOCRR EDWARD L	PHONE: 907-243-2922
ELTEC	KINCAID JAMES R	PHONE: 907-243-2922
ELTEC	NEWTON DONALD T	PHONE: 907-243-2922
ELTEC	DAILEY LEO S	PHONE: 907-271-5102

REMOTE LOCATION	REMOTE SID	ELEVATION (FEET)	COORDINATES	PLATFORM	TRANSLATOR	SATELLITE	REPORT TIME	PARAMETER	SENSOR	OWNER
ANCHORAGE 7SE	AROA2	****	61:30N 140:58W	15CF67BE	HANDAR 540A	WEST	0000	RIVER	F&P ADR	USGS

TABLE 2 SITE INFORMATION FILES

REGION	STATION NAME	STATE	ORG CODE	SID	AES AREA
5	FAIRBANKS	AK	WV9261	FAI	1

MAILING ADDRESS

NATL WEATHER SERV.FORECAST OFF
ATTN: AES
P.O. B0X 21
101 12TH AVENUE **FIRST CLASS**
FED BLDG & COURTHOUSE, RM 270
Fairbanks,AK 99701

SHIPPING ADDRESS

NATL WEATHER SERV.FORECAST OFF
FEDERAL BLDG.. RM 270
101 12TH AVENUE
FAIRBANKS. AK 99701

AES	HEAPS KENNETH L	PHONE: 907-456-0247
SET	MORKAL JACK V	PHONE: 907-452-5300
ELTEC	HOWE IRENE A	PHONE: 907-452-5300
ELTEC	CUSTER, KIMBERLY	PHONE: 907-452-5300
ELTCC	REDDING CARROL T	PHONE: 907-452-5300
ELTEC	CERRA JERALD D	PHONE: 907-452-5300
ELTEC	LINDNER ROMAN T	PHONE: 907-452-5300

REMOTE LOCATION	REMOTE SID	ELEVATION (FEET)	COORDINATES	PLATFORM	TRANSLATOR	SATELLITE	REPORT TIME	PARAMETER	SENSOR	OWNER
FAIRBANKS 39ENC	FBSA2	****	64:54N 146:24W	15D4A696	HANDAR 54OA	WEST	0004	RIVER PRECIP	F&P ADR F&P	USOS NWS
FAIRBANKS 9ENE	FBNA2	****	64:54N 146:24W	15D4B5E0	HANDAR 540A	WEST	00005	RIVER PRECIP	F&P ADR F&P	USOS NWS
HARDING LAKE	HAHA2	****	64:24N 146:57W	15D4DOO6	HANDAR 540A	WEST	0007	PRECIP RIVER	F&P F&P ADR	NWS USOS
NENANA	ENNA2	****	64:34N 149:05W	15D4E59C	HANDAR 54OA	WEST	0008	RIVER	F&P ADR	USOS
SALCHAKET	SALA2	****	64:28N 146:26W	15D4C370	HANDAR 540A	WEST	0006	RIVER	F&P ADR	USOS
STEVENS VILLAGE 26WSW	YRBA2	****	65:52N 149:48W	15D280B4	HANDAR 540A	WEST	0003	RIVER	F&P ADR	USOS

TABLE 2 SITE INFORMATION FILES

TABLE 3 - Distribution of Programming Sets for RAMOS

RAMOS INSTALLATION		EL TECH STA/ AHOS-S RAMOS OVERLAP		EL TECH STA/ RAMOS ONLY		NO. SENT	SHIPPING DATE
ROME	ID	BOISE	ID				
LUKEVILLE	AZ	PHOENIX	AZ				
CLINES CORNER	NM	ALBUQUERQUE	NM				
CLAYTON LAKE	ME	CHARIBON	ME				
MT DESERT ROCK	ME	CHARIBON	ME				
SALT POINT	LA			NEW ORLEANS	LA	1	APR 83
TENNECO OP	LA			NEW ORLEANS	LA	1	
FRENCH FRIGATE SHOALS	HI			HONALULU	HI		
CAPE SPENCER	AK			JUNEAU	AK		
ELDRED ROCK	AK			JUNEAU	AK	3	MAY 83
POINT RETREAT	AK			JUNEAU	AK		
CAPE DECISION	AK			JUNEAU	AK		
NIKOLSKI	AK			ANCHORAGE	AK		
ANDREAFSKI	AK			ANCHORAGE	AK	2	JUNE 83
SHUNGNAK	AK			FAIRBANKS	AK		
ANAKTUVAK	AK			FAIRBANKS	AK		AUG 83

C. DOCUMENTATION

1. Instruction Manual

An equipment manual is provided with each Handar system -- "Handar Multiple Access Data Acquisition System Model 540A, NWS Configuration."

2. Special Drawings

The complete set of drawings needed for DCP replacement are described below and are contained in this TIP.

a.	D900-1-FD001	DCP Connector Panel
b.	D900-1MP1-SD001	DCP Mounting Bracket/Hardware
c.	D900-5-SD001	Interface Enclosure Handar Data Collection Platform, Model 540A Assembly
d.	D900-5-SD002	Interface Enclosure Handar Data Collection Platform, Model 540A Drill Detail
e.	D900-5-SD003	Interface Enclosure Handar Data Collection Platform, Model 540A Strap
f.	D900-5MP2-SD001	Interface Enclosure Handar Data Collection Platform, Model 540A Mounting Bracket
g.	D900-5Wl-SD001	Interface Enclosure Handar Data Collection Platform, Model 540A Sensor Interface Cable Assembly
h.	D900-5W2-SD001	Interface Enclosure Handar Data Collection Platform Model 540A Battery Interface Cable Assembly
i.	D900-5-FDOO1	AHOS-S System Interconnection Diagram
j.	Wiring Table	ADR Gage - Handar DCP
k.	D900-5-FDOO2	Fischer and Porter Precipitation Gage DCP Strobe Control Switch
l.	Wiring Table	Incremental Encoder - Handar DCP
m.	D105-1MP1-SD001	Handar Incremental Shaft encoder mounting bracket
n.	D105-1-FD001	Slave Encoder Configuration's
o.	D105-1W1-SD001	Handar Incremental Shaft Encoder interface cable with barrier strip
p.	Wiring Table	Tipping Bucket RG - Handar DCP

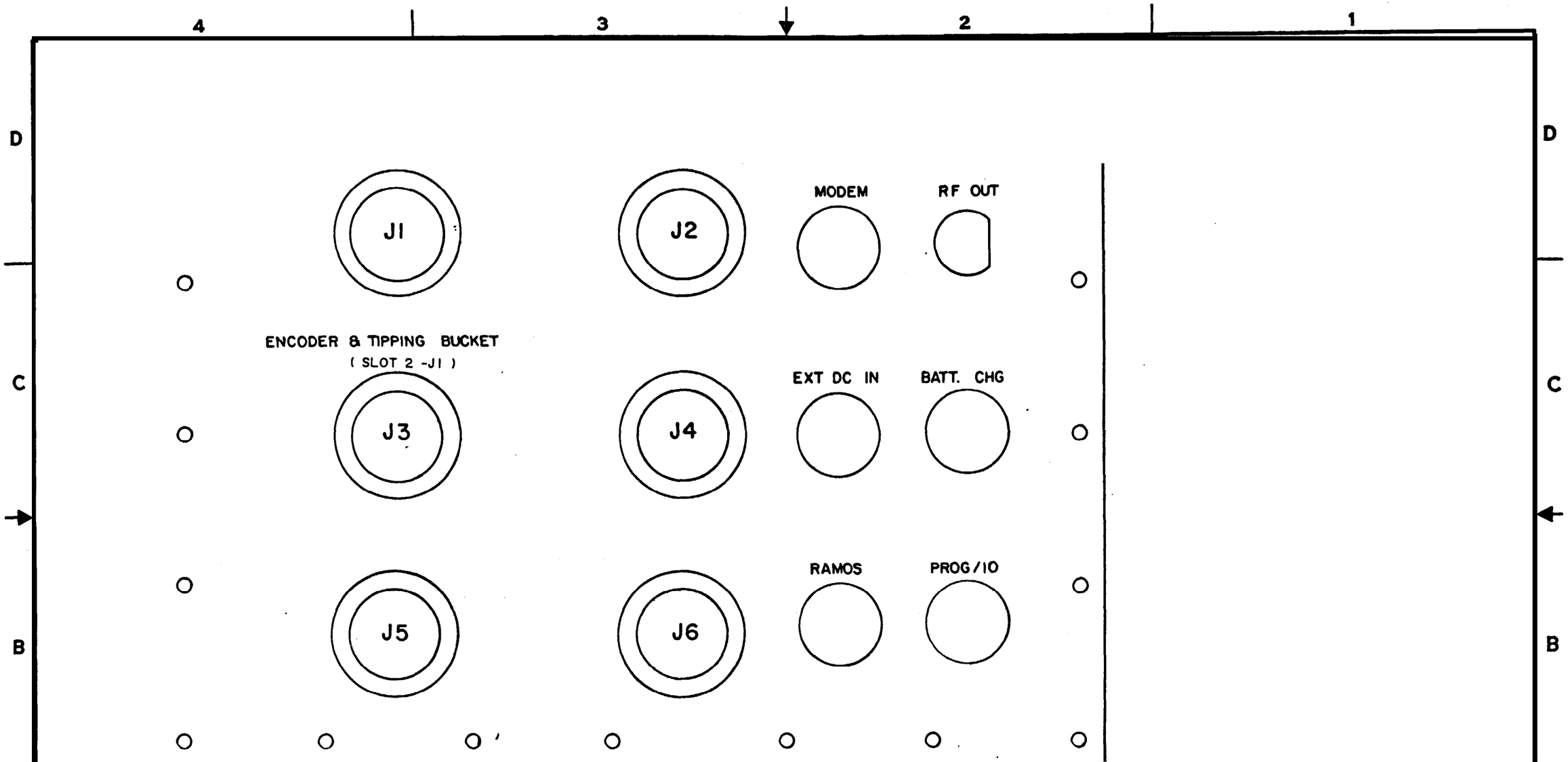

UNLESS OTHERWISE SPECIFIED DIMENSIONS ARE IN INCHES TOLERANCES: ANGLES ±.5° 3 PLACE DEC. ±.005 2 PLACE DEC. ±.02	ENGINEERING DIVISION SILVER SPRING, MD. 20910	U.S. DEPARTMENT OF COMMERCE NATIONAL OCEANIC & ATMOSPHERIC ADMINISTRATION NATIONAL WEATHER SERVICE
MATERIAL	PREPARED REP 8-11-83	HANDAR DATA COLLECTION PLATFORM MODEL 540A CONNECTOR PANEL
	CHECKED	
	DESIGN	
	APPROVED BY H. Hoppe	SIZE / DATE 8-11-83 / DRAWING NO. D900-1-FD001
	APPROVED BY	SCALE / SHEET / FILE

REVISIONS					
Zone	Ltr.	Description	Date	Rev. By	App'd

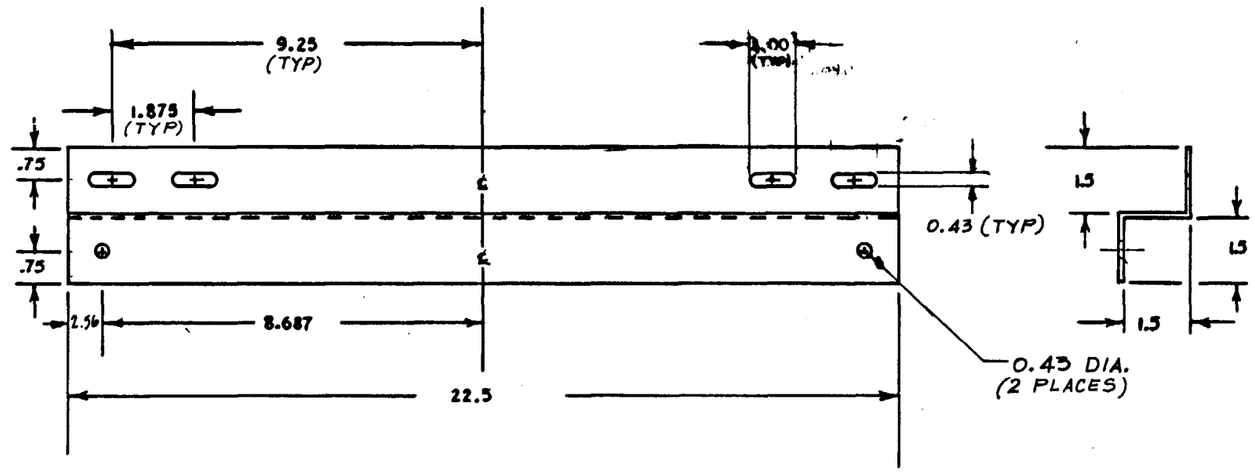

MATERIAL: STAINLESS STEEL, 11 GAGE
SLOTS: 1 INCH LONG
ALL HOLES FOR 3/8" HARDWARE

1. U-BOLT 2" DIA. x 2 3/4 LG. 5/16-18 THD. STAINLESS STEEL (2 REQ'D).
2. HEX HD. BOLT 5/16-18 x 3/4 LG. STAINLESS STEEL (2 REQ'D).
3. NUT 5/16-18 STAINLESS STEEL (6 REQ'D).
4. LOCK WASHER 5/16 STAINLESS STEEL (6 REQ'D).
5. FLAT WASHER 5/16 I.D. x 3/4 O.D. STAINLESS STEEL (8 REQ'D).

UNLESS OTHERWISE SPECIFIED:
DIMENSIONS ARE IN INCHES
TOLERANCES: ANGLES ± .5°
3 PLACE DECIMALS ± .008
2 PLACE DECIMALS ± .08

ENGINEERING DIVISION
SILVER SPRING, MD. 20910

PREPARED	R.E.B.	8-23/83
CHECKED		
DESIGN		
APPROVED BY		
APPROVED BY		

U.S. DEPARTMENT OF COMMERCE
NATIONAL OCEANIC & ATMOSPHERIC ADMINISTRATION
NATIONAL WEATHER SERVICE

HANDAR DATA COLLECTION PLATFORM
MODEL 540A
MOUNTING BRACKET

SIZE	DATE	DRAWING NO.
C	9/1/83	D900-1MP1-SD001
SCALE		

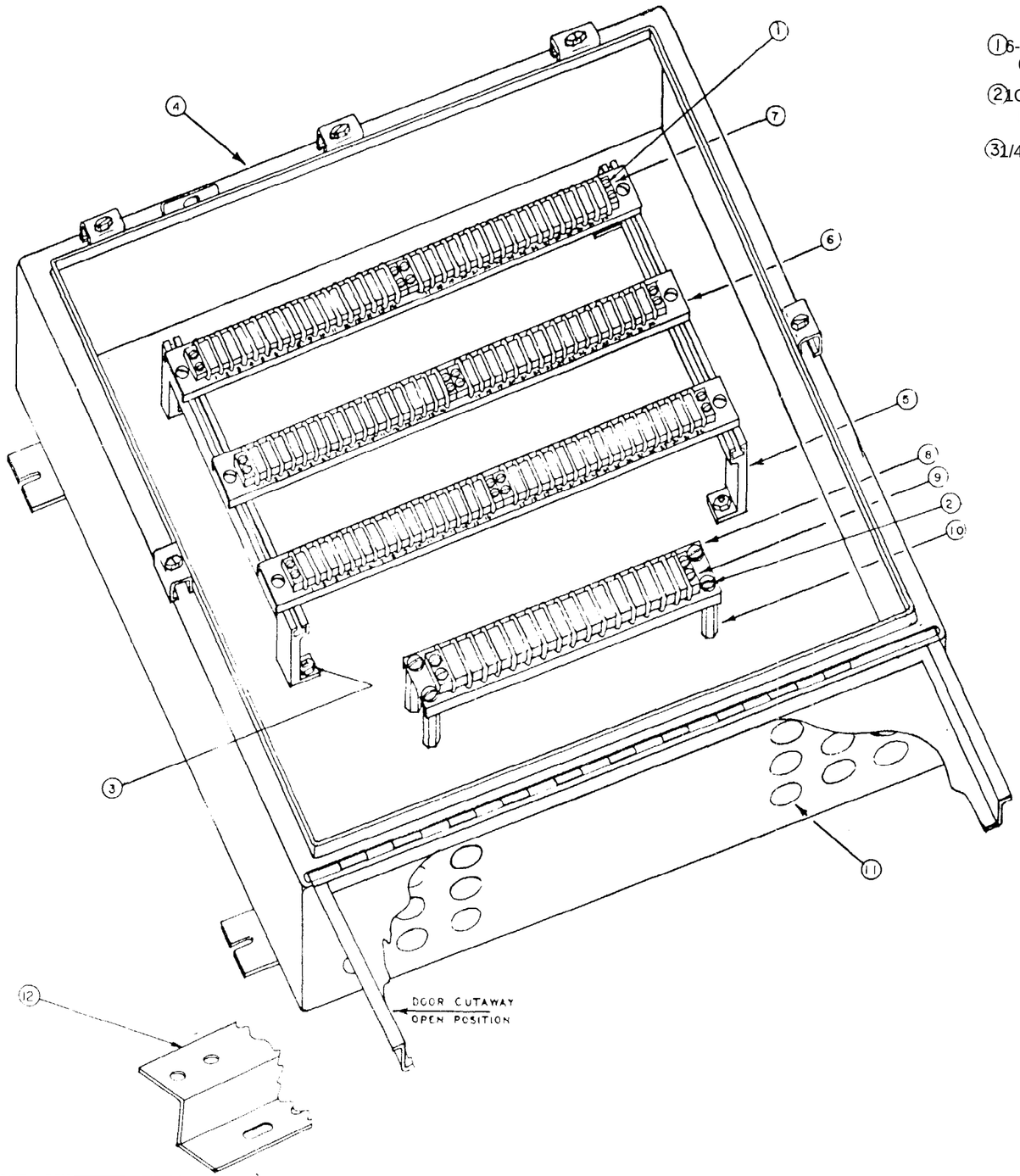

PARTS LIST

(1) 6-32X58 LG PAN HEAD S.S. SCREW, 28 REQ'D.
6-32 HEX NUT S.S., 28 REQ'D.

(2) 10-32-1/2 LG. PAN HEAD S.S.SCREW, 8 REQ'D.
NO. 10 LOCK WASHER S.S., 8 REQ'D.

(3) 1/4-20x1/2 LG. PAN HEAD S.9-SCREW, 4 REQ'D.
1/4-20 HEX NUT S.S., 4 REQ'D.
1/4 LOCK WASHER S.S., 4 REQ'D.

(4) ENCLOSURE: HOFFMAN NO. A-24H2408SSLP, 1 EA.
PER DWG. D900-5-SD002

(5) RAIL: HOFFMAN NO. A-16-NTMA2, 2 EA.

(6) STRAP: HOFFMAN NO. A-20-T, 3 EA.

(7) TERMINAL BOARD: CINCH NO. 16-141, 6 EA.

(8) STRAP: FABRICATE PER DWG. NO. D900-5-SD003

(9) TERMINAL BOARD: CINCH NO. 16-142, 1 EA.

(10) SPACER: SMITH NO. 8469, 4 EA.

(11) HOLE PLUG: HEYCO NO. 2703
(12) SUPPORT BRACKET PER DWG. D900-5-SD004
(13) STRAIN RELIEF KIT: THOMAS & BETTS

NO. 2520, 2EA. , NO. 2521, 2 EA.
NO. 2522, 2.EA. , NO. 2523, 2 EA.
NO. 2524, 2 EA. INCLUDE LOCK NUTS.

NOTES :
I-CENTER TERM BDS ON STRAPS TO LOCATE MTG HOLES.
2. STENCIL STRAPS 1 THRU 32 FOR THOSE WITH TWO TERM BDS.
3. BAG STRAIN RELIEF KIT AND TAPE INSIDE ENCLOSURE FOR SHIPMENT.
4. PUT INTERNAL STAR WASHERS UNDER ALL NUTS.

REVISIONS				
Zone	Ltr	Description	Date	Rev By	App'd

FIND NO	ELEC REF DES	NOMENCLATURE OR DESCRIPTION	QTY REQD	PART OR IDENTIFYING NO	DWG SIZE	CODE IDENT	SPECIFICATION OR MATERIAL

LIST OF MATERIAL

UNLESS OTHERWISE SPECIFIED:
DIMENSIONS ARE IN INCHES
TOLERANCES ANGLES ± 5°
3 PLACE DECIMALS ± .005
2 PLACE DECIMALS ± .02

ENGINEERING DIVISION
SILVER SPRING, MD 20910

PREPARED
CHECKED
DESIGN
APPROVED BY
APPROVED BY

U.S. DEPARTMENT OF COMMERCE
NATIONAL OCEANIC & ATMOSPHERIC ADMINISTRATION
NATIONAL WEATHER SERVICE

INTERFACE ENCLOSURE
HANDAR DATA COLLECTION PLATFORM
MODEL 540A
ASSEMBLY

SIZE D | SIZE 6-29-83 | DRAWING NO. D900-5-SD001
SCALE | SHEET | FILE

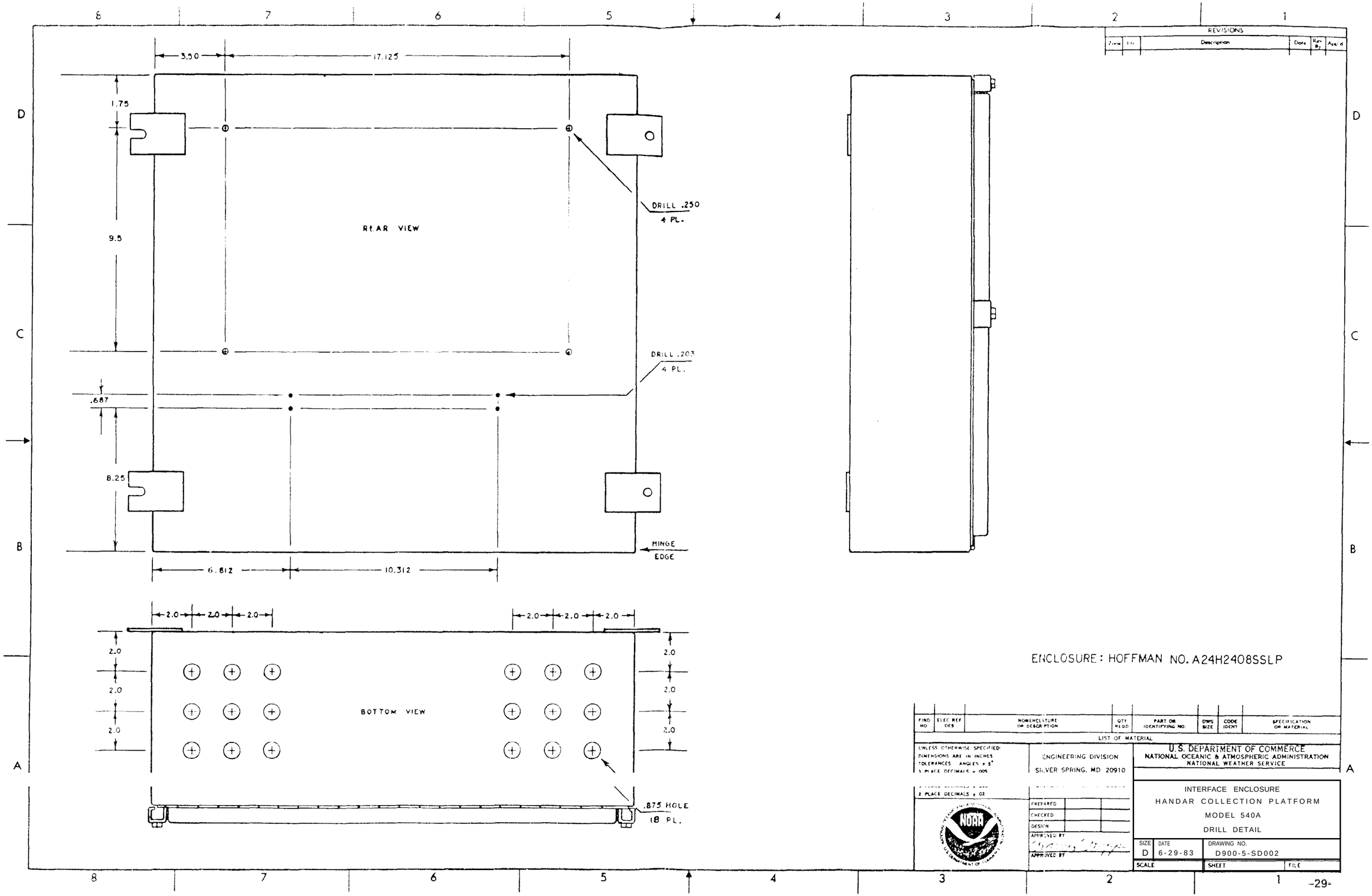
REVISIONS
Zone
Ltr
Description
Date
Rev By
Appd
3.50
17.125
1.75
9.5
.687
8.25
6.812
10.312
REAR VIEW
DRILL .250
4 PL.
DRILL .203
4 PL.
HINGE
EDGE
2.0
BOTTOM VIEW
.875 HOLE
18 PL.
ENCLOSURE: HOFFMAN NO. A24H2408SSLP
FIND NO
ELEC REF DES
NOMENCLATURE OR DESCRIPTION
QTY REQD
PART OR IDENTIFYING NO.
DWG SIZE
CODE IDENT
SPECIFICATION OR MATERIAL
LIST OF MATERIAL
UNLESS OTHERWISE SPECIFIED:
DIMENSIONS ARE IN INCHES
TOLERANCES ANGLES ± 5°
3 PLACE DECIMALS ± .005
2 PLACE DECIMALS ± .02
ENGINEERING DIVISION
SILVER SPRING, MD 20910
U.S. DEPARTMENT OF COMMERCE
NATIONAL OCEANIC & ATMOSPHERIC ADMINISTRATION
NATIONAL WEATHER SERVICE
PREPARED
CHECKED
DESIGN
APPROVED BY
APPROVED BY
INTERFACE ENCLOSURE
HANDAR COLLECTION PLATFORM
MODEL 540A
DRILL DETAIL
SIZE
D
DATE
6-29-83
DRAWING NO.
D900-5-SD002
SCALE
SHEET
FILE

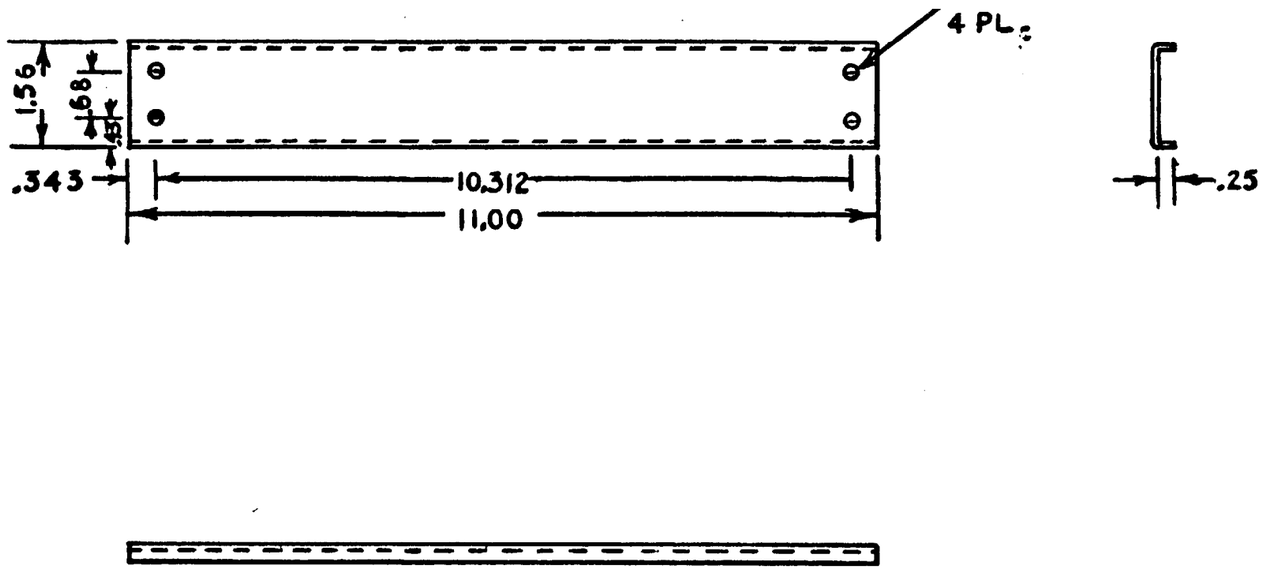

MATERIAL

16 GAGE S. STEEL WITH 2 COATS
OF WHITE PAINT (ENAMEL)

UNLESS OTHERWISE SPECIFIED DIMENSIONS ARE IN INCHES TOLERANCES: ANGLES ±.5° 3 PLACE DEC. ±.005 2 PLACE DEC. ±.02	ENGINEERING DIVISION SILVER SPRING, MD. 20910	U.S. DEPARTMENT OF COMMERCE NATIONAL OCEANIC & ATMOSPHERIC ADMINISTRATION NATIONAL WEATHER SERVICE
MATERIAL	PREPARED R.E.B. 6-23-83	INTERFACE ENCLOSURE HANDAR DATA COLLECTION PLATFORM MODEL 540A STRAP
	CHECKED	
	DESIGN	
	APPROVED BY Harvey Hoppe	SIZE / DATE 6-29-83 / DRAWING NO. D900-5-SD003
	APPROVED BY	SCALE / SHEET / FILE

Zone	Ltr.	REVISIONS Description	Date.	Rev. By	Appd

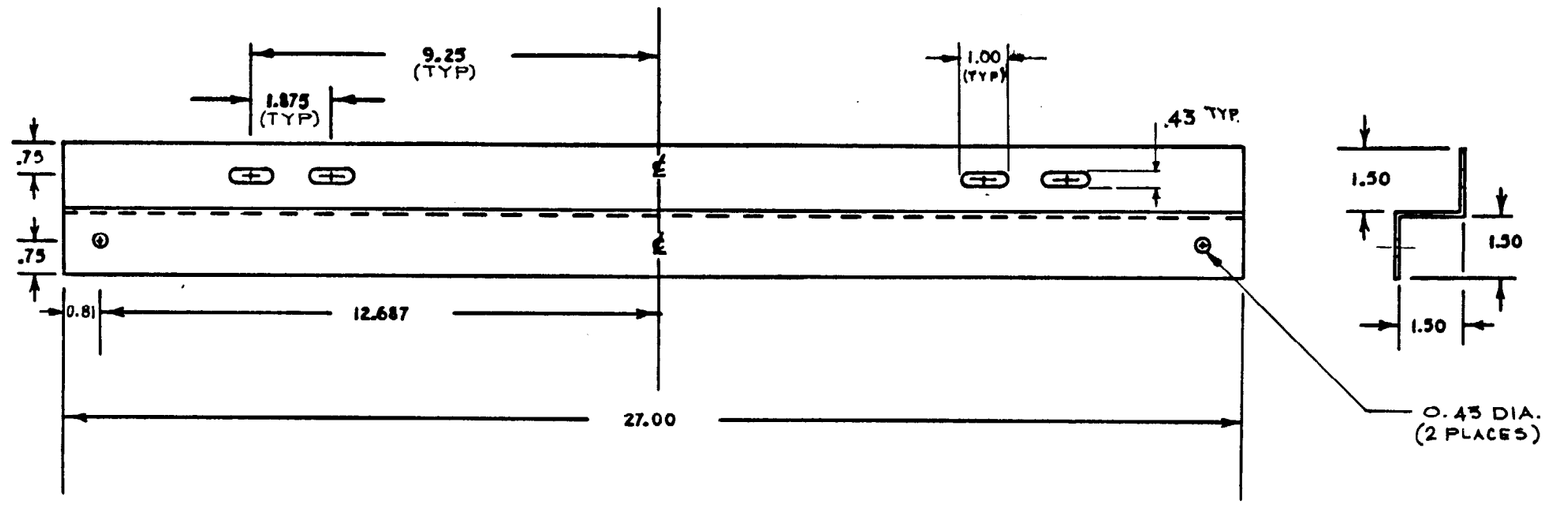

MATERIAL: STAINLESS STEEL, 11 GAGE
SLOTS: 1 INCH LONG
ALL HOLES FOR 3/8" HARDWARE

1. U-BOLT 2" DIA x 2 3/4 LG. 5/16-18 THD. STAINLESS STEEL (2 REQ'D)

2. HEX HD. BOLT 5/16 - 18 x 3/4" LG STAINLESS STEEL (2 REQ'D)
3. NUT 5/16 - 18 STAINLESS STEEL (6 REQ'D)
4. LOCK WASHER 5/16 STAINLESS STEEL (6 REQ'D)
5. FLAT WASHER 5/16 I.D. x 3/4 O.D. STAINLESS STEEL (8 REQ'D).

UNLESS OTHERWISE SPECIFIED:
DIMENSIONS ARE IN INCHES
TOLERANCES: ANGLES ± .5°
3 PLACE DECIMALS ± .005
2 PLACE DECIMALS ± .02

ENGINEERING DIVISION
SILVER SPRING, MD. 20910

PREPARED	R.E.B	8-29-83
CHECKED		
DESIGN		
APPROVED BY	Harvey Hoppe	
APPROVED BY		

U.S. DEPARTMENT OF COMMERCE
NATIONAL OCEANIC & ATMOSPHERIC ADMINISTRATION
NATIONAL WEATHER SERVICE

INTERFACE ENCLOSURE

HANDAR DATA COLLECTION PLATFORM
MODEL 540A
SUPPORT BRACKET

SIZE	DATE	DRAWING NO.
C	6-29-83	D900-5MP2-5D001
SCALE		SHEET / FILE

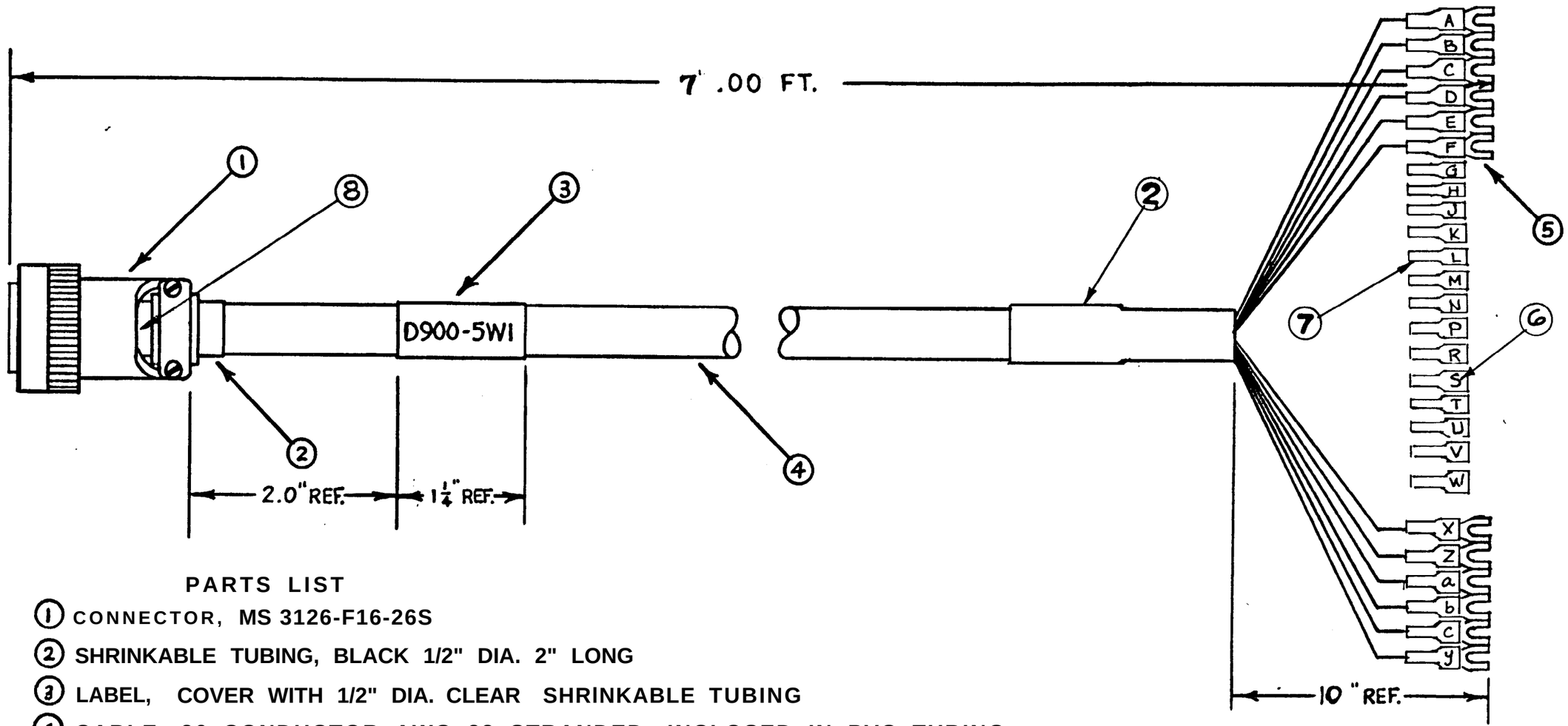

PARTS LIST

1. CONNECTOR, MS 3126-F16-26S
2. SHRINKABLE TUBING, BLACK 1/2" DIA. 2" LONG
3. LABEL, COVER WITH 1/2" DIA. CLEAR SHRINKABLE TUBING
4. CABLE, 26 CONDUCTOR AWG 22 STRANDED, INCLOSED IN PVC TUBING
5. LUG #6 26 EA.
6. WIRE MARKER, 26 EA. LETTERS AS SHOWN
7. SHRINKABLE TUBING, BLACK 1/8" DIA. 3/4"LONG,26EA.
8. SILICONE RUBBER SEALANT, GE RTV 102 (TO POT REAR OF CONNECTOR

UNLESS OTHERWISE SPECIFIED DIMENSIONS ARE IN INCHES
TOLERANCES: ANGLES ±.5°
3 PLACE DEC. ±.005
2 PLACE DEC. ±.02

MATERIAL

ENGINEERING DIVISION
SILVER SPRING, MD. 20910

PREPARED	R.E.B.	8/23/83
CHECKED		
DESIGN		
APPROVED BY	Harvey Hoppe	
APPROVED BY		

U.S. DEPARTMENT OF COMMERCE
NATIONAL OCEANIC & ATMOSPHERIC ADMINISTRATION
NATIONAL WEATHER SERVICE

INTERFACE ENCLOSURE
HANDAR DATA COLLECTION PLATFORM
MODEL 540A
SENSOR INTERFACE CABLE ASSEMBLY

SIZE	DATE	DRAWING NO.
	7/1/83	D900-5W1-SD001
SCALE	SHEET	FILE

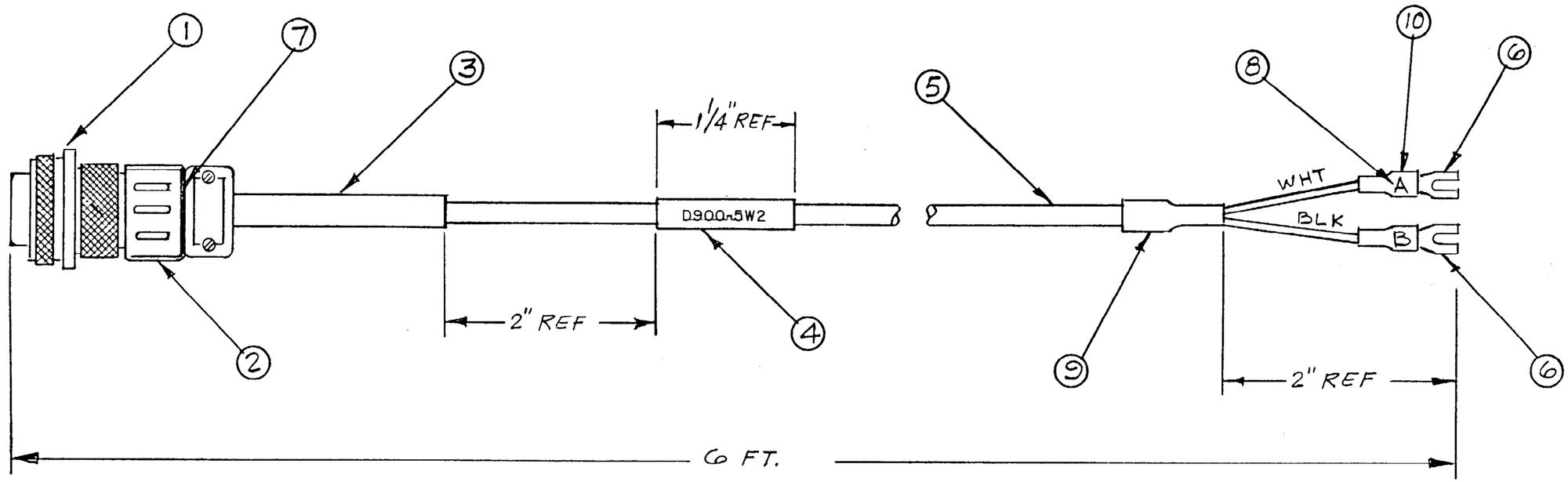

PARTS LIST

1. CONNECTOR, MS 3106A-14S-1S
2. CABLE CLAMP, MS 3057-6
3. BOOT, AMPHENOL NO. 9779-513-4
4. LABEL, COVER WITH CLEAR SHRINKABLE TUBING
5. CABLE, 2/C AWG 22 W/SHIELD, BELDEN 83394
6. LUG, NO. 8 (2 REQUIRED)
7. SILICONE RUBBER SEALANT, GE RTV 102 (TO POT REAR OF CONNECTOR.
8. WIRE MARKERS A & B
9. SHRINKABLE TUBING BLACK 1/4" DIA 1 INCH LONG.
10. SHRINKABLE TUBING BLACK 1/8" DIA. 3/4" LONG.

NOTE: SHIELD CONNECTED TO PIN C ONLY.

UNLESS OTHERWISE SPECIFIED DIMENSIONS ARE IN INCHES TOLERANCES: ANGLES ±.5° 3 PLACE DEC. ±.005 2 PLACE DEC. ±.02	ENGINEERING DIVISION SILVER SPRING, MD. 20910	U.S. DEPARTMENT OF COMMERCE NATIONAL OCEANIC & ATMOSPHERIC ADMINISTRATION NATIONAL WEATHER SERVICE
MATERIAL	PREPARED R.E.B. 8-30-83	CABLE ASSEMBLY HANDAR 540A FOR MODEM, EXT DC IN, BATT. CHARGING CONNECTIONS
	CHECKED	
	DESIGN	
	APPROVED BY	SIZE / DATE 9/1/83 / DRAWING NO. D900-5W2-SD001
	APPROVED BY	SCALE / SHEET / FILE

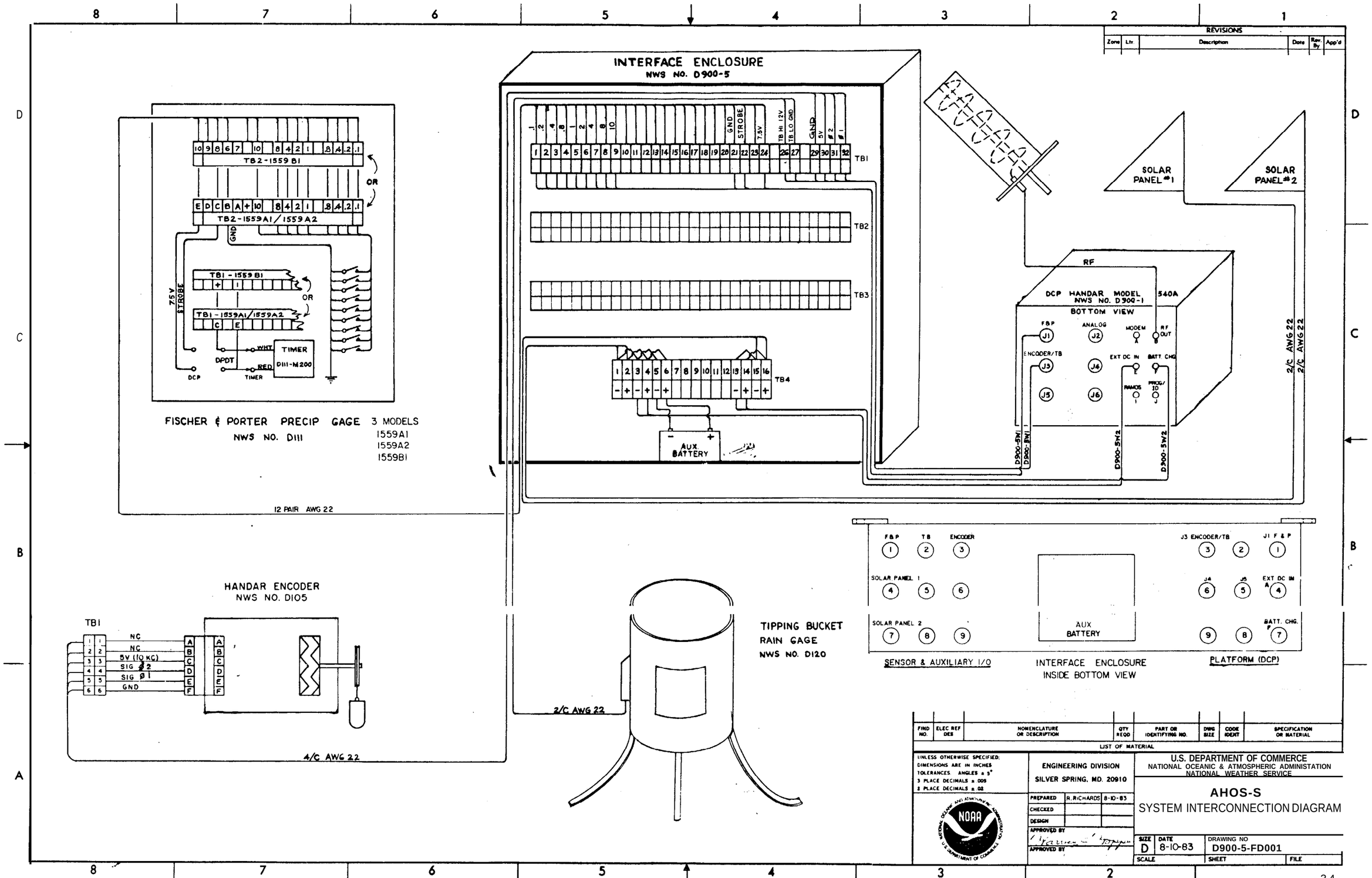
INTERFACE ENCLOSURE
NWS NO. D900-5
TB1
TB2
TB3
TB4
AUX BATTERY
SOLAR PANEL #1
SOLAR PANEL #2
RF
DCP HANDAR MODEL 540A
NWS NO. D900-1
BOTTOM VIEW
F&P
ANALOG
MODEM
RF OUT
ENCODER/TB
EXT DC IN
BATT CHG
RAMOS
PROG/ID
D900-SW1
D900-SW2
2/C AWG 22
FISCHER & PORTER PRECIP GAGE 3 MODELS
NWS NO. D111
1559A1
1559A2
1559B1
TB2-1559B1
TB2-1559A1/1559A2
TB1-1559B1
TB1-1559A1/1559A2
7.5V
STROBE
GND
DPDT
WHT
RED
TIMER
D111-M200
DCP
12 PAIR AWG 22
HANDAR ENCODER
NWS NO. D105
TB1
NC
5V (10 KΩ)
SIG #2
SIG #1
4/C AWG 22
2/C AWG 22
TIPPING BUCKET
RAIN GAGE
NWS NO. D120
SENSOR & AUXILIARY I/O
INTERFACE ENCLOSURE
INSIDE BOTTOM VIEW
PLATFORM (DCP)
SOLAR PANEL 1
SOLAR PANEL 2
EXT DC IN
BATT. CHG.
REVISIONS
Zone
Ltr.
Description
Date
Rev. By
App'd
FIND NO.
ELEC REF DES
NOMENCLATURE OR DESCRIPTION
QTY REQD
PART OR IDENTIFYING NO.
DWG SIZE
CODE IDENT
SPECIFICATION OR MATERIAL
LIST OF MATERIAL
UNLESS OTHERWISE SPECIFIED:
DIMENSIONS ARE IN INCHES
TOLERANCES ANGLES ± 3°
3 PLACE DECIMALS ± .005
2 PLACE DECIMALS ± .02
ENGINEERING DIVISION
SILVER SPRING, MD. 20910
PREPARED R. RICHARDS 8-10-83
CHECKED
DESIGN
APPROVED BY
APPROVED BY
U.S. DEPARTMENT OF COMMERCE
NATIONAL OCEANIC & ATMOSPHERIC ADMINISTATION
NATIONAL WEATHER SERVICE
AHOS-S
SYSTEM INTERCONNECTION DIAGRAM
SIZE D
DATE 8-10-83
DRAWING NO D900-5-FD001
SCALE
SHEET
FILE

F&P Precipitation Gage Cable
Wiring Table

F&P PCP Gage	Interface Enclosure	HANDAR DCP
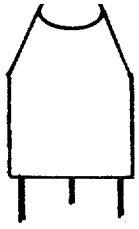	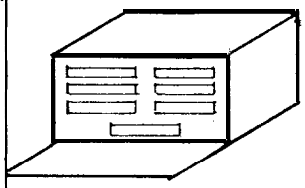	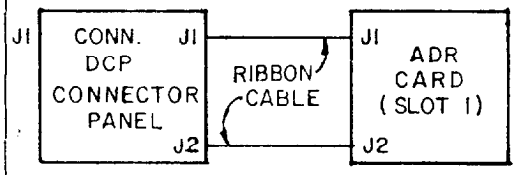
0.1	1	U
0.2	2	R
0.4	3	P
0.8	4	S
1	5	D
2	6	E
4	7	C
8	8	H
10	9	T
STROBE No. 1	22	X
7.5 V CONT	24	V
GROUND	21	A

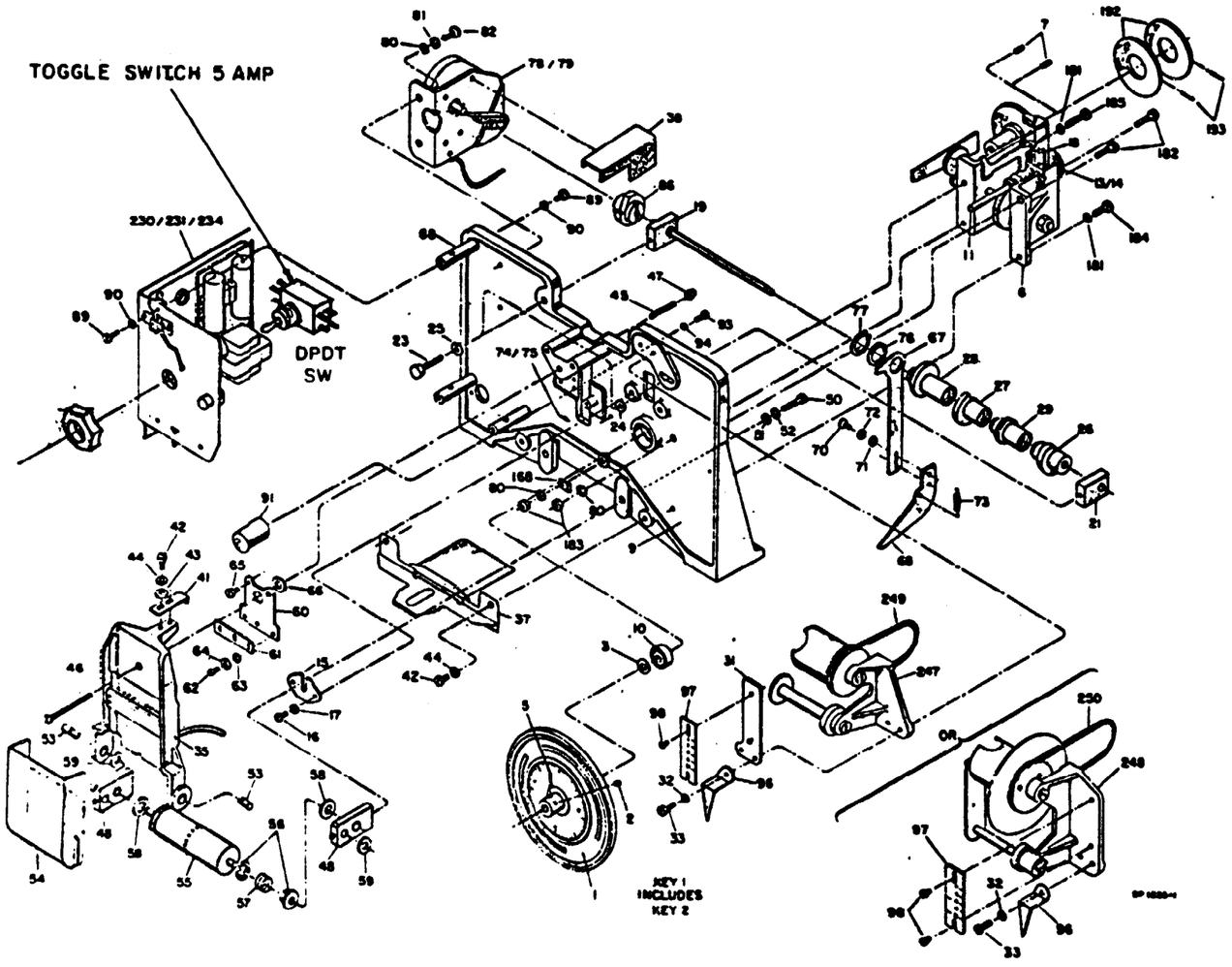

NOTE:

A DPDT Switch will be installed on AHOS-S Fischer and Porter Prescription gages and mounted in the 1/2" hole of the timer assembly bracket left empty when the mechanical timers were replaced with electronic timers (Hydrologic Gaging Modification Note 3). The DPDT Switch will be wired in accordance with Drawings D900-FD001 and D900-FD002.

This switch will be left in the position for DCP strobe control during normal operation. During times of DCP failure, the switch will be in the position for gage initiation of strobe to prevent loss of precipitation tape record.

UNLESS OTHERWISE SPECIFIED DIMENSIONS ARE IN INCHES TOLERANCES: ANGLES ± .5° 3 PLACE DEC. ± .005 2 PLACE DEC. ± .02	ENGINEERING DIVISION SILVER SPRING, MD. 20910	U.S. DEPARTMENT OF COMMERCE NATIONAL OCEANIC & ATMOSPHERIC ADMINISTRATION NATIONAL WEATHER SERVICE
MATERIAL	PREPARED R.E.B 8/2/83	FISHER AND PORTER PRECIPTATION GAGE DCP STROBE CONTROL SWITCH
	CHECKED	
	DESIGN	
	APPROVED BY	
	APPROVED BY	SIZE / DATE 9/1/83 / DRAWING NO. D900-5-FD002
		SCALE / SHEET / FILE

Incremental Encoder
Cable Wiring Table

Incremental Encoder		Interface Enclosure	HANDAR DCP
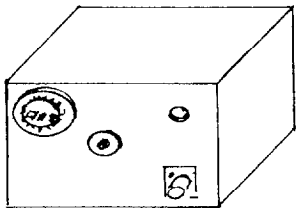	TB1	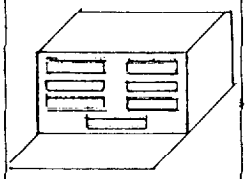	J3 — CONN. DCP CONNECTOR PANEL — J3 — RIBBON CABLE — J1 INC. ENCODER CARD (SLOT 2)
E (SIG Ø1) --------	- 5 --	----- 32 -----	---------- a
D (SIG Ø2) --------	- 4 --	----- 31 -----	---------- z
C (5V) ----------	- 3 --	----- 30 -----	---------- y
F (GND) ----------	- 6 --	----- 29 -----	---------- x

REVISIONS					
Zone	Ltr.	Description	Date	Rev. By	App'd.

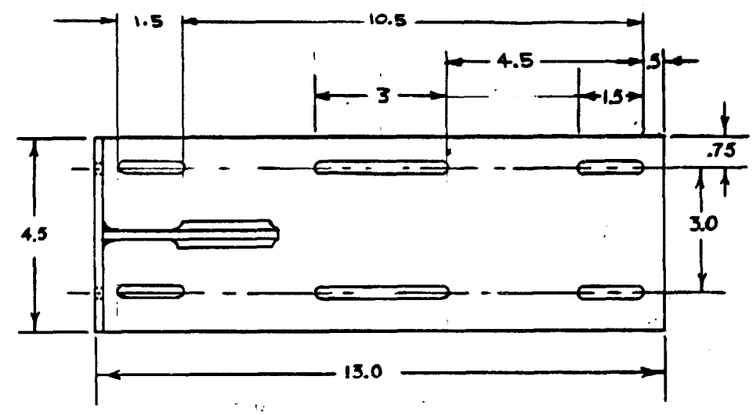

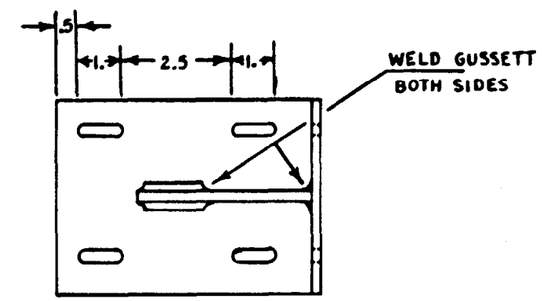

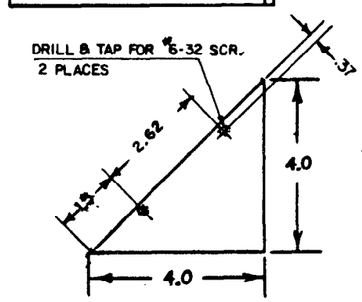

GUSSETT 0.187 THK.

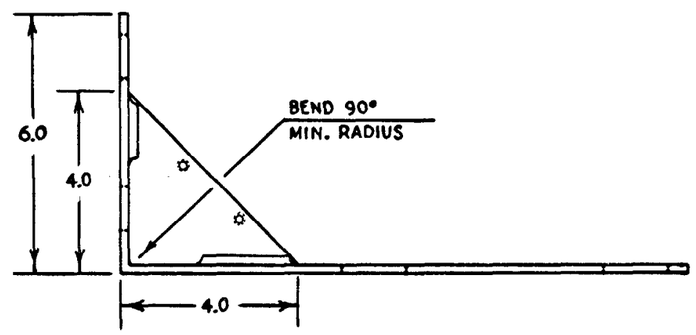

MATERIAL: AL 0.187 THK. NO. 5052
FINISH: BLACK ANODIZE
DEBURR ALL HOLES AND EDGES

1. HEX HD LAG BOLT 1/4 1 LG S. STL 4 REQD
2. HEX HD BOLT 1/4-20 3/4 LG S. STL 4 REQD
3. FLAT WASHER 1/4 S. STL 8 REQD
4. LOCK WASHER 1/4 S. STL 4 REQD
5. NUT 1/4-20 S. STL 4 REQD
6. MACH. SCREW 6-32 x 7/16 LG. 2 REQD
7. HEX HD. LAG BOLT 1/4 $1\frac{1}{2}$ LG S. STL 2 REQ'D (TO SECURE ADR).

UNLESS OTHERWISE SPECIFIED:
DIMENSIONS ARE IN INCHES
TOLERANCES: ANGLES ± .5°
3 PLACE DECIMALS ± .005
2 PLACE DECIMALS ± .02

ENGINEERING DIVISION
SILVER SPRING, MD. 20910

PREPARED	R. E. B.	8-23-83
CHECKED		
DESIGN		
APPROVED BY	D. Hoppe	
APPROVED BY		

U.S. DEPARTMENT OF COMMERCE
NATIONAL OCEANIC & ATMOSPHERIC ADMINISTATION
NATIONAL WEATHER SERVICE

HANDAR INCREMENTAL SHAFT ENCODER
MOUNTING BRACKET

SIZE	DATE	DRAWING NO.
C	9/1/83	D105-1MP1-SD0001
SCALE	SHEET	FILE

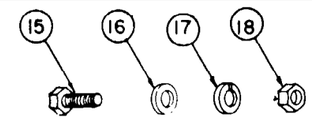

DETAIL "B"

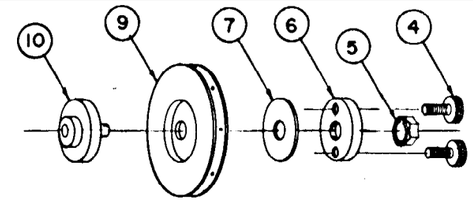

DETAIL "C"

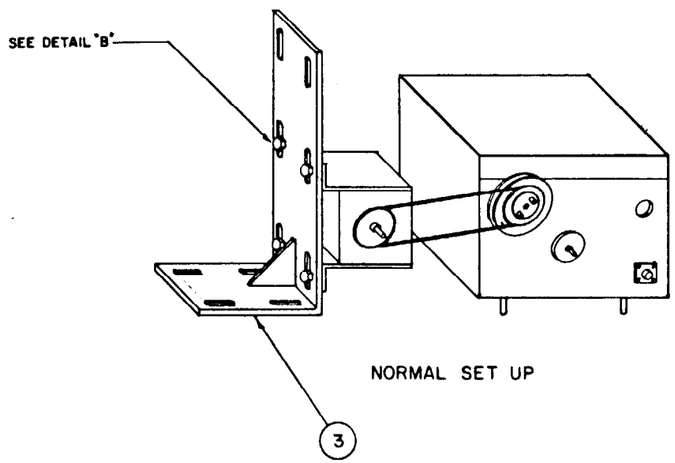

NORMAL SET UP

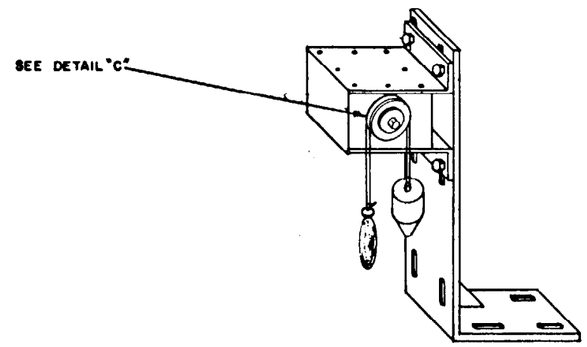

STAND ALONE

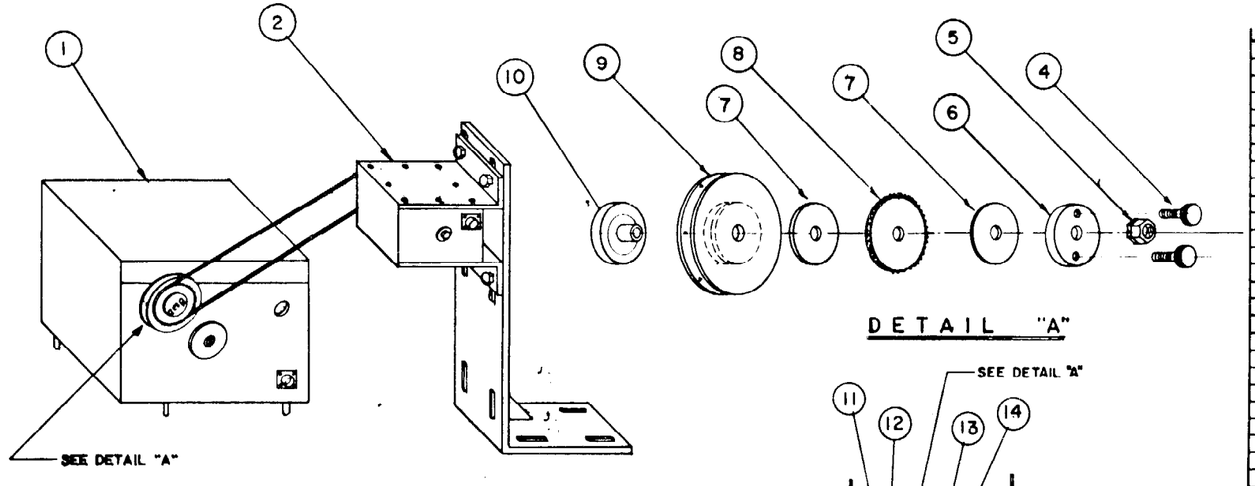

REVERSE SET UP

DETAIL "A"

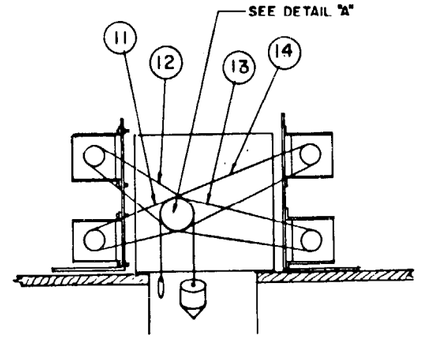

REVISIONS

Zone	Ltr	Description	Date	Rev By	App'd

FIND NO.	ELEC REF DES	NOMENCLATURE OR DESCRIPTION	QTY REQD	PART OR IDENTIFYING NO.	DWG SIZE	CODE IDENT	SPECIFICATION OR MATERIAL
19		CHAIN SPROCKET		SMP26A-50		29440	5/16" BORE PINNED HUB
18		NUT 1/4"-20	4				STAINLESS STEEL
17		LOCK WASHER 1/4"	4				STAINLESS STEEL
16		FLAT WASHER 1/4"	4				STAINLESS STEEL
15		HEX HD BOLT 1/4"-20 3/4"	4				STAINLESS STEEL
14		MIN-E-PITCH CHAIN	1	3CCF-220-E		29440	
13		[illegible]	1	3CCF-170-E		29440	
12		[illegible]	1	3CCF-150-E		29440	
11		MIN-E-PITCH CHAIN	1	3CCF-120-E		29440	
10		HUB	1	3710079		82205	
9		DRIVE PULLEY	1	655A511		82205	
8		CHAIN SPROCKET	1	SMP3A-50		29440	1/2" BORE HUBLESS
7		FLAT WASHER	2	3778002		82205	
6		FLANGE	1	3638078		82205	
5		CASTLE NUT	1			82205	
4		THUMB SCREW	2	3968019		82208	
3		ENCODER MOUNTING BRACKET	1	D105-1MP1			D105-1MP1-30001
2		HANDAR SHAFT ENCODER	1	MODEL 436A			
1		F&P ADR	1				

LIST OF MATERIAL

UNLESS OTHERWISE SPECIFIED:
DIMENSIONS ARE IN INCHES
TOLERANCES: ANGLES ± 5°
3 PLACE DECIMALS ± .005
2 PLACE DECIMALS ± .02

ENGINEERING DIVISION
SILVER SPRING, MD. 20910

PREPARED	R.E.B.	8/5/83
CHECKED		
DESIGN		
APPROVED BY	Harvey Hoppe	
APPROVED BY		

U.S. DEPARTMENT OF COMMERCE
NATIONAL OCEANIC & ATMOSPHERIC ADMINISTRATION
NATIONAL WEATHER SERVICE

HANDAR SHAFT ENCODER
MOUNTING CONFIGURATION

SIZE	DATE	DRAWING NO.
D	7/5/83	D105-1-FD001
SCALE		SHEET 1 OF 1 FILE

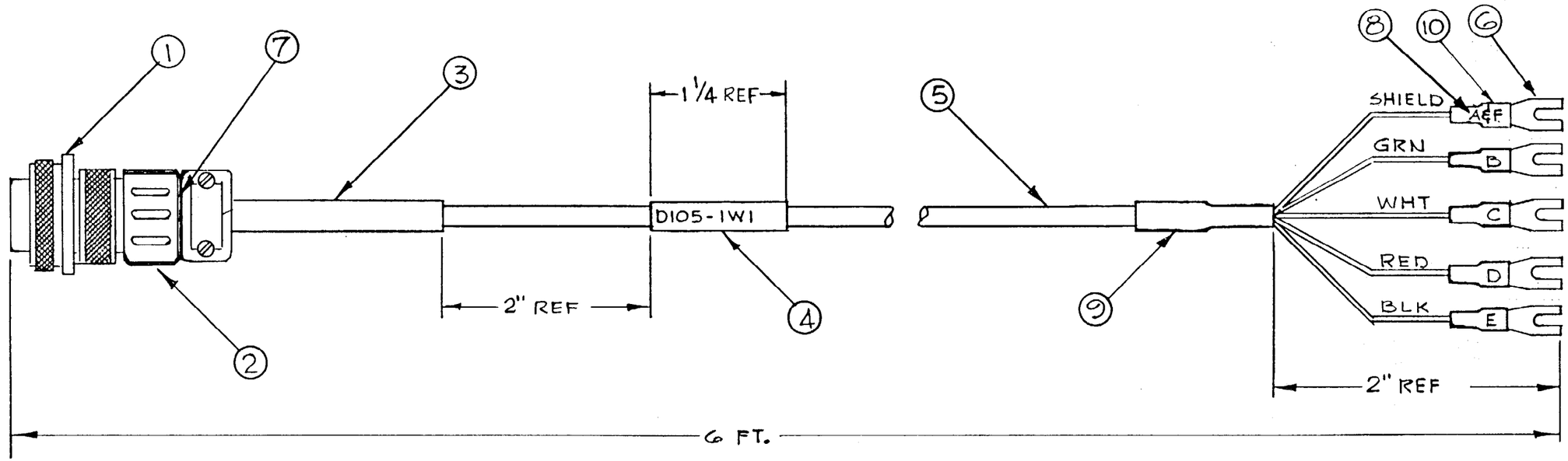

PARTS LIST

1. CONNECTOR, MS 3106A - 14S - 6S
2. CABLE CLAMP, MS 3057-6
3. BOOT, AMPHENOL NO. 9779 - 513 - 4
4. LABLE, COVER WITH CLEAR SHRINKABLE TUBING
5. CABLE, 4/C AWG 22 W/SHIELD, BELDEN 83396
6. LUG, NO. 8 (5 REQUIRED)
7. SILICONE RUBBER SEALANT, GE RTV 102 (TO POT REAR OF CONNECTOR.
8. WIRE MARKERS, A, B, C, D, E & F
9. SHRINKABLE TUBING BLACK 1/4" DIA. 1" LONG.
10. SHRINKABLE TUBING BLACK 1/8" DIA. 3/4" LONG.

NOTE: SHIELD CONNECTED TO PINS A & F AT CONNECTOR.

UNLESS OTHERWISE SPECIFIED DIMENSIONS ARE IN INCHES TOLERANCES: ANGLES ±.5° 3 PLACE DEC. ±.005 2 PLACE DEC. ±.02	ENGINEERING DIVISION SILVER SPRING, MD. 20910		U.S. DEPARTMENT OF COMMERCE NATIONAL OCEANIC & ATMOSPHERIC ADMINISTRATION NATIONAL WEATHER SERVICE
MATERIAL	PREPARED R.E.B. 8/24/83		CABLE ASSEMBLY HANDAR 436 INCREMENTAL ENCODER OR HANDAR 540A (RAMOS)
	CHECKED		
	DESIGN		
	APPROVED BY D. F. Hoppe		SIZE / DATE 9/1/83 / DRAWING NO. D105-1W1-SD001
	APPROVED BY		SCALE / SHEET / FILE

Tipping Bucket Rain Gage
Cable Wiring Table

Tipping Bucket Gage	Interface Enclosure	HANDAR DCP
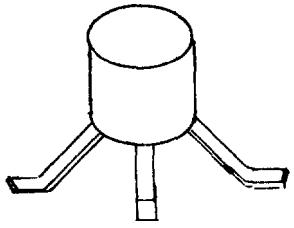	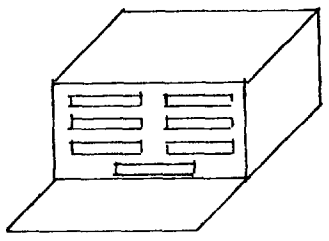	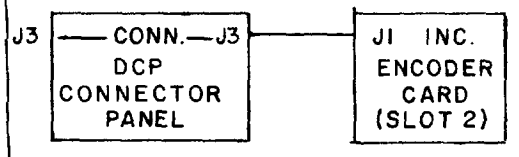
TB OUTPUT HI -------	- - - - - 26 ----------	--------- E
TB OUTPUT LO -------	- - - - - 27 ----------	--------- N

C. DOCUMENTATION (continued)

3. Replacement Parts Information

NWR Part No.	
D900	**Multiple Access Data Acquisition System, Handar Model 540A with Accessory Items
D900-1	Data Collection Platform, Handar Model 540A without sensor interface cards
D900-1A13	Assembly, Printed Circuit Board, Analog to Digital Recorder Interface Card, for use with Fischer and Porter ADR Type Gages, Handar P/N 540-6013
D900-1A14	Assembly, Printed Circuit Board, Incremental Shaft encoder and Tipping Bucket Rain Gage Interface Card, Handar P/N 540-7014
D900-1A15	Assembly, Printed Circuit Board, RAMOS Interface, Handar P/N 540-7015
D900-1A16MP1	End Cap, Connector, for 26 PIN MS Connector, MS Type 3181-16N, Handar P/N 580-0053
D900-1A16MP2	End Cap, Connector, for 12 PIN MS Connector, MS Type 3181-14N, Handar P/N 580-0053
D900-1A16MP3	End Cap, Connector, for 6 and 3 pin MS Connector, MS Type 25043-14D, Handar P/N 580-0086
D900-1A16W1	Cable, Ribbon 26 Conductor, 2O-inches long, connects I/O for interface PCB, Handar P/N 540-3020
D900-1BT1	Battery 12V, 20 AH, Rechargeable, Handar P/N 600-0900
D900-1E1	Antenna, Crossed YAGI, 401.8 MHZ, 11DB Gain Synergetics P/N 402-11-l (not available at present time)
D900-1E2	Antenna, Helical, Anixter-Mark, model H-450R, Shrouded, for Goes DCPRS, (when ordering, use stock No. U130-A11)
D900-1E2MP1	Antenna Mount, PAS modified with 2 Bottom Parts Only, Harvey Hubbell Inc. (when ordering, use stock No. V130-A11SP1)

C. DOCUMENTATION (continued)

3. Replacement Parts Information (Continued)

D900-1EZMP2	Adaptor, Antenna Mounting (when ordering, use stock No. V130-A11SP2)
D900-1MP1	Bracket, Mounting, DCP, with hardware
D900-2	Programming Set, Handar Model 545A
D900-2A1	Charger, Battery, 5 AMP, with Cable, Handar P/N 545-7001
D900-2W1	Cable, Interface Programming set to DCP (Data Collection Platform), Handar P/N 545-3004
D900-3	Analyzer, Field, SMS/GOES Data Collection Platform, Handar Model No. 503A
D900-3AT1	Attenuator, 30DB Texscan Corp., P/N HFP 50/30
D900-3CP1	Adaptor, N Type plug to TNC Jack, Amphenol P/N 78800
D900-4	Analyzer, Clock and Dams Platform Information, True Time Model No.468-FPC (being evaluated by T&ED)
D900-5	Enclosure, Interface, Data Collection Platform to Sensor
D900-5MP1	Plug, hole, Heyco P/N 2703
D900-5MP2	Bracket, Mounting, with Hardware
D900-5W1	Cable, Interface, Sensor
D900-5W2	Cable, Interface, Battery
D105	Encoder/Accessories
D105-1	Encoder, Shaft Incremental, Handar Model No. 436A
D105-1MP1	Bracket, Mounting
D105-1W1	Cable, Interface Encoder to Barrier Strip with barrier strip
D105-2MP1	Nut, Hexagon, Castle, full bearing Belfort P/N 093COO1.

C. DOCUMENTATION (continued)

3. Replacement Parts Information (continued)

D105-2MP2	Screw Thumb, #10-32x13/16", Belfort P/N 396B019
D105-2MP3	Flange, Belfort P/N 363B075
D105-2MP4	Washer, flat, 2 required per installation, Belfort P/N 377B002
D105-2MP5	Drive, Pulley Assembly, Belfort P/N 655A511
D105-2MP6	Set Screw, Hex Hole, #10-32 x 5/16", Belfort P/N 019L005S31
D105-2MP7	HUB, Belfort P/N 371D079
D105-3MP1	Tape, Float, Perforated 2.4 inch intervals, Belfort P/N 8933A (specify length required in feet) (when ordering, use Stock No. D550-N101)
D105-3MP2	Float, 3-inch diameter x 18 inches long, Leupold and Stevens P/N 23867 (when ordering, use stock no. D535-2-3)
D105-3MP3	Counterweight, Float, Lead, 32-oz., Leupold and Stevens P/N 22682 (when ordering, use stock no. D530-9)
D105-4MP1	Chain Sprocket, Incremental Shaft Encoder with 5/16" bore pinned hub, Berg P/N 3MP31A-50
D105-4MP2	Chain Sprocket, Fischer and Porter ADR, with l/2 inch bore drilled, hubless Berg P/N 3MF3A-50
D105-4MP3	MIN-E-PITCH Chain, 18.8 inch Loop, Berg P/N 3CCF-120-E
D105-4MP4	MIN-E-PITCH Chain, 23.5 inch Loop, Berg P/N 3CCF-150-E
D105-4MP5	MIN-E-PITCH Chain, 26.7 inch Loop, Berg P/N 3CCF-170-E
D105-4MP6	MIN-E-PITCH Chain, 34.5 inch Loop, Berg P/N 3CCF-220-E

C. DOCUMENTATION (continued)

4. EMRS Reporting

Continue to report maintenance activity on the Data Collection Platforms under the EMRS Reporting Code AHOS-S as described in EHB-4.

5. Special Reporting

Report Modification completion through EMRS activation procedures as described in EHB-4.

D. REGIONAL TRAINING

A 3 day training course to familiarize field technicians with the installation and programming of the Handar Model 540A Data Collection Platform will be scheduled and conducted by W/OTS41, Test and Evaluation Division, in all regions as indicated below. Travel expenses are to be charged to WG2100 8M1A841A. Please send a copy of your travel orders and vouchers to W/OTS2lx3, Attn: J.Schiesl.

Regional Training Schedule

Regions	Training Location	Training Dates
5	Anchorage, AL	July 11-14, 1983
3,4	Spokane, WA	August 15-19, 1983
1	Portland, ME	September 12-16, 1983
2,6	Albuquerque, NM	October 31 - November 3, 1983

E. MAINTENANCE POLICIES

1. Maintenance Responsibility

The organizational responsibility for installation and maintenance of the Handar Model 540A DCP will be the electronics technicians currently maintaining the Magnavox DCPRS's. Responsibilities are generally defined in the NWS Operations Manual Chapter H-50.

2. On-Site-Repair

The on-site repair authorized for the Handar Model 540A DCP will be limited to sensor interface subassembly replacement. The River Gage Incremental Encoder will be a whole unit exchange.

E. MAINTENANCE POLICIES (continued)

3. Station Sparing

Authorized station sparing levels for DCP assemblies are as follows:

Assembly	Remote Stations	Authorized Spares
Handar Model 540A	1-4	1
	above 4	1
F&P Precip. Interface	1-4	1
	above 4	1
Handar Incremental Encdr.	1-4	1
	above 4	2
Encoder & Tipping BKT Interface	1-4	1
	above 4	2

4. Maintenance Schedule

Routine maintenance procedures are presently defined in the Handar Manual -- "Handar Multiple Access Data Acquisition System Model 540A." These procedures will be incorporated into EHB-10.

5. Equipment Warranty

During the 1-year warranty period, the electronics technician with knowledge of any failure to a model 540A, contact Handar. (Mr. Clyde Davis or Hank Fallek, Sunnyvale, California, 408 734-9640). This should be done before returning unit to NRC. Items with a repairable disposition code should be returned to the National Reconditioning Center (NRC). NRC will coordinate warranty repairs with the manufacturer. Warranty terms: Handar products are warranted against defects in materials and workmanship. This warranty applies for one year from the date of Government acceptance. Government acceptance will be deemed to have occurred no more than 30 days after the receipt of goods. Handar will repair or replace products which prove to be defective during the warranty period and Handar will pay for transportation expenses to and from the agency location. Handar does not warrant batteries or damage caused by faulty batteries. No other warranty is expressed or implied. Handar is not liable to consequential damages.

E. MAINTENANCE POLICIES (continued)

6. Test Equipment and Special Tools

a. Handar SMS/GOES Data Collection Platform Field Analyzer, Model No. 5028.

The Handar Model 502B Field Analyzer is an integrated system providing the SMS/GOES user with the capability to qualify the performance of his data collection platform. It receives the transmitted RF carrier, demodulates, decodes, and displays the data, simulating a field portable down link and data processor. It has a standard integral AC/DC power supply which permits operation from 110 volt AC or internal batteries with four hours of service.

b. Handar Programming Set, Model No. 545A.

The Handar Programming Set provides programming and central interface to the 540A. It features a sealed keyboard and liquid-crystal display for field environments and contains an integral power supply, on-board GMT clock, and solid state memory to store and load programs to and from the 540A. Users can write and test programs in the office, then transfer the software to field sites either remotely through phone lines or on-site with the programming cable.

7. Disposition of Replaced Equipment

a. Replaced Magnavox DCPRS's will be maintained as station spares until all Magnavox DCPRS's in the maintenance area have been removed from operation. When replacement is completed, dispose of the Magnavox equipment in accordance with Regional Property Procedures.

b. Return those Fischer and Porter ADR River Gages (NWS No. D550) which are owned by NWS to NRC for parts cannibalization.

C. Return all Devices for Automatic Remote Data Collection (DARDC's - NWS No. 0580-l) to NRC for parts cannibalization.

F. STAFFING POLICIES

1. Workforce requirements

Workforce requirements are estimated to be near present AHOS-S levels.

U.S. DEPARTMENT OF COMMERCE
National Oceanic and Atmospheric Administration
NATIONAL WEATHER SERVICE
Silver Spring, Md. 20910

APR 3-1985

W/OTS141:BGM

TO: Addressees Listed Below

FROM: W/OTS1 - J. Michael St. Clair

SUBJECT: Technical Information Package - Installation of the Data Collection Platform Handar (DCPH) System (Telephone Type)

ACTION: Rep1ace the Bristol Metameter with the Data Collection Platform Handar System (Telephone Type)

The Data Collection Platform Handar (DCPH), Model 540A (Telephone Type), has been procured to replace the Bristol Metameter equipment located in the Eastern and Southern regions. This Handar equipment eliminates the chronic logistics problem with the aging Bristol Metameter.

The attached Technical Information Package (TIP) provides useful information for the Bristol Metameter equipment replacement installations. Handar systems are being delivered by the manufacturer directly to the field sites. These systems can easily be installed using the Handar manual and training material. This TIP provides supplementary information.

This TIP is being sent to all AES's responsible for tide gage sites. Each AES should forward this information to the appropriate electronics technician(s) in their area.

Addressees:

W/ER72 - A. Simpkins
W/SR72 - O. Blevins
W/CR72 - J. Taylor
W/WR72 - D. Wilson
W/AR72 - D. Hobart
W/PR11 - M. Keyes
RAS/CC4l - J. Houston
All AES's with Tide Gage Sites

Attachment:
TIP - Marine Equipment Replacement

W/OTS11 - M. Nikolaiev
W/OTS13 - H. Hoppe
W/OTS14 - S. Loring
W/OTS21x5 - M. Uhart
W/OTS41 - T. Titus
W/TCx1 - R. Brauch

TECHNICAL INFORMATION PACKAGE
for
HANDAR MULTIPLE ACCESS DATA ACQUISITION SYSTEM

Page

SECTION I - Installation Schedule 1

A. Locations 1

B. Equipment Delivery 1

SECTION II - Installation Criteria 2

A. General 2

B. Physical Characteristics 2

c. Receiving Information 2

D. Power Requirements 2

E. Interconnections 3

SECTION III - Installation Procedure 4

A. Introduction 4

B. System Location 4

c. Mounting Board Assembly 4

D. Mounting Board Installation 5

E. Enclosure Installation 5

F. Incremental Encoder Installation 5

SECTION IV - System Initialization 8

A. System Start-up 8

B. Programming 8

Page

SECTION V - Documentation 11

A. Instruction Manuals 11

B. Special Drawings 11

c. Maintenance Schedules 11

D. EMRS Reporting 11

E. Instrumental Equipment Catalog 11

SECTION VI - Maintenance Training 12

A. Initial Training 12

B. NWSTC Training 12

SECTION VII - Maintenance Policies 13

A. Maintenance Responsibilities 13

B. Extent of On-Site Repair 13

c. Equipment Guarantee 13

D. Staffing 13

E. Disposition of Replaced Equipment 13

F. Firmware Revisions 14

ATTACHMENTS AND DRAWINGS

1. Equipment for Handar 540A Tide Gage (Telephone System)

2. Site Location, Station References, Local Observers and Contractors

3. Program Example

4. Incremental Encoder Cable Wiring Table

5. Handar 540A Marine Tide Gage - Wiring Configuration

6. Handar Shaft Encoder Mounting Configuration

7. Handar Incremental Shaft Encoder Mounting Bracket

FOREWORD

The Data Collection Platform Handar (DCPH) System is an integrated multiple access data acquisition system which can provide data retrieval via satellite, telephone, or VHF/UHF radio. The system is housed in a weatherproof enclosure including a microprocessor controller, 12-bit analog to digital connector, battery charger, and 24 AA battery supply. With the 540-6005 modem option installed, programming can be done over the telephone lines to perform various data acquisition routines.

Bobby G. McCormick
Hydrologic System Program Leader

SECTION I

Installation Schedule

A. Locations

Sites receiving the new DCPH (telephone system) are as follows:

1.	Galveston Pleasure Pier,	TX
2.	Seabrook,	TX
3.	Galveston Pier 21,	TX
4.	So. Padre Island,	TX
5.	Sabine Pass,	TX
6.	Ft. Pike,	TX
7.	Paris Rd.,	LA
8.	Cameron,	LA
9.	Venice,	LA
10.	Mobile,	AL
11.	Apalachicola,	FL
12.	Key West,	FL
13.	Atlantic City,	NJ
14.	Baltimore,	MD
15.	Richmond,	VA
16.	Norfolk,	VA
17.	Washington,	DC
18.	Wilmington,	DE
19.	Portland,	ME
20.	East Boston,	MA
21.	Stratford	CT
22.	Jamaica,	NY
23.	Charleston,	SC
24.	West Columbia,	SC
25.	Buxton,	NC
26.	Warwick,	RI

B. Equipment Delivery

The new DCPH telephone systems were delivered from the factory during the months of November and December 1984. The systems were forwarded to the stations direct from the factory. The auxiliary equipment required to support the DCPH telephone system was distributed by the Engineering Division.

SECTION II

Installation Criteria

A. General

The NWS Marine program has initiated the replacement of the Bristol Metameter telemetering equipment in the Eastern and Southern regions that no longer can be logistically supported. The DCPH system was chosen to replace the Bristol equipment.

The DCPH is an integrated system that provides data to be retrieved via the telephone network. This system may be programmed with the companion 545A programming set, or any RS-232 ASCII data terminal. Handar's modem-phone interface feature allows remote programming at the site, or from the office!

This terminal is an option and not furnished by the Marine Program. However, if a terminal is available at the station it could be used for programming or data retrieval from the DCPH.

Before any installation is made involving a NOS tide gage, you must coordinate this effort through NOS. Check Attachment 2 for the NOS contact in your area.

B. Physical Characteristics

The DCPH is enclosed in a stainless steel, hermetically sealed enclosure with a special NWS connector panel configuration. The chassis contains a common bus-type architecture for printed circuit assemblies.

The enclosure measures 12" x 16" x 9.5" and weighs 55 pounds. It has four mounting tabs for easy installation to a wall or bench, and can be mounted in any orientation.

c. Receiving Information

The DCPH telephone system and 545A programming set have been delivered by the manufacturer directly to the stations. The items are packed in cardboard containers, with cushioning material and shipped via surface transportation to the station. Any damaged items will be held on station pending disposition instructions from Engineering Division, W/OTS14.

D. Power Requirements

Primary power for the DCPH telephone system is an internal 24 AH 12V gel battery fused for 5 amps. The battery charger furnished with the system requires 110 VAC, 60 Hz.

The programming set 545A requires 12.5 volts - 500 ma while in operation and 200 uA in standby - for the internal clock.

NOTE: THE INTERNAL BATTERY ON THE 545A SHOULD BE KEPT ON A CHARGER AT ALL TIMES WHEN NOT IN USE IN THE FIELD.

E. Interconnections

Drawing No. D900T-FDOO1 shows the wiring for the Handar 540A tide gage system. A wiring table, Attachment 4, is included as an aid for installation of the 436A incremental encoder .

SECTION III

Installation Procedure

A. Introduction

This system is easy to install, provided some planning and forethought is used prior to installation. A preliminary inspection of the tide gage house should be done before installation of the DCPH. During this inspection consideration should be given to the system location. Keep in mind that the system should have access to the telephone jack (RJ11-C-Type) and AC power. If possible, a calm day with very little wave action should be picked for installation, as this will make calibration of the gage easier.

B. System Location Considerations

There are two general types of tide gage houses utilized by the National Ocean Service. Typically they consist of a stud frame construction, or fiberglass over plywood. When determining the location in the tide gage house, ample space for servicing and replacing the existing equipment must be provided.

If the tide gage house is a stud frame construction, it is important to measure the exact location of the studs in the wall. These studs will be used to secure the mounting board.

The wall thickness of a fiberglass over plywood tide gage house is typically 1-1/2".

c. Mounting Board Assembly

After determining a suitable location to install the DCPH, the size of the mounting board can be determined. The mounting board will consist of a 1/2" piece of exterior grade plywood. The plywood should be large enough to hold the 12" x 16" x 9.5" DCPH system enclosure, and wide enough to be secured to the stud frame construction, or fiberglass tide gage house. The mounting board should be predrilled with six 3/8" wall mounting holes evenly spaced along the sides of the board about 1" in from *the* edge. Determine where the DCPH enclosure will be installed on the mounting board. Locate and drill four 3/8" mounting holes into the mounting board to correspond to the mounting tabs on the DCPH enclosure. To facilitate easy removal of the enclosure for service/replacement, four stainless steel 3/8" x 2" flathead machine screws and flatwashers and a nut should be installed into the 3/8" mounting holes. The four holes for the flathead screws should be countersunk for a flush fit. Then the enclosure can be

attached to the remaining threads of the screw with another flat washer and nut. The enclosure will stand off of the plywood about 3/8".

D. Mounting Board Installation

The attachment of the mounting board to the tide gage house wall must be secure enough to hold the 55 lb. enclosure.

For attachment to a fiberglass tide gage house it is best to use six 3/8" x 2-1/2" to 3" stainless steel carriage bolts. Due to the rounded heads of this type bolt they are very tamper-resistant from the outside of the building. A 1/2" flat washer is required on the head of each bolt. This is to help distribute the load of the Handar enclosure on the exterior wall.

For attachment to a stud frame contruction tide gage house, it is best to use six 3/8" x 1-1/2" to 2" stainless steel lag screws. Locate the nearest studs in the vicinity of the proposed location of the mounting board. The studs should be on 16" centers. Then drill 1/4" diameter pilot holes into the stud approximately 1″ to 1-1/2″ deep.

E. Enclosure Installation

After the mounting board has been secured to the tide gage house wall, the Handar enclosure can be attached to the four 3/8" screws on the mounting board. Tighten the nuts just enough to hold the enclosure and allow for easy removal without turning the whole flat head screw assembly.

Connect the battery charger and phone line to the Handar system. NOTE: The encoder external cable (53) will have to be fabricated using the 26-pin connector provided. Refer to drawing D900T-FD001 and Incremental Encoder Wiring Table, Attachment 4. Secure all extra lengths of cable neatly under the DCPH. Open the enclosure door and install the incremental encoder interface card (P/N 540-7014) into slot #1. Connect the ribbon cable located on the J3 connector to the incremental encoder card. Do not turn the DCPH on yet.

F. Incremental Encoder Installation

This portion of the installation is the most critical. It is not difficult, but if not done correctly, will affect the operation of both the ADR and DCPH.

First, verify that the proposed location of the encoder will not affect the operation and maintenance of existing equipment.

1. Attach the incremental encoder to the mounting bracket (P/N D105-1MP1) provided with the kit.

2. Attach the 35 tooth chain sprocket to the incremental encoder. Be sure the set screw is located on the flat of the shaft.

3. Remove the ADR gage dust cover.

4. Wait for the gage to punch. Record the following information:

   * Draw a line at last punch reference
   * Date, MM/DD/YY, example June 5, 1985
   * Correct local time including time zone
   * Example 15:05 EDT
   * Tide staff or Electric Tape Gage (ETG), example 08.75 ft.

5. Place the ADR cover back on the gage.

6. Slowly raise the float by turning the cable drum on the NOS gage. Be sure to keep some tension on the floatwire at all times. The floatwire will become a "birds nest" if the wire is not kept taut.

7. While holding some tension on the floatwire, place two pieces of tape on the float reel to hold the floatwire in the grooves of the float reel.

8. If the gage is a Fischer & Porter ADR:

   * Remove the castle nut and install the 70-tooth chain sprocket assembly. Replace nut and tighten the sprocket assembly.

   If the gage is a Leupold & Stevens ADR:

   * Install the 7O-tooth chain sprocket assembly in the 1/2" hole in the center of the floatreel. Be careful not to insert this bolt more than 3/8" into the floatreel. This will cause the gage to bind.

9. Using the available lengths of chain, establish the location of the incremental encoder. Be sure to have the chain in alignment with the 70-tooth chain sprocket assembly and taut.

   * Mark and drill the four mounting holes on the table. Allow for adjustment with the slots on the encoder.

   * Bolt encoder to the table. Leave the bolts hand tight.

* Install the chain on the two sprockets.

* Adjust the tension of the chain so there is about 1/4" to 3/8" movement in the chain.

* Tighten the encoder mounting bolts.

* Connect all cables. Refer to Drawing D900T-FD001.

At this point, the system is connected to the ADR. The float is setting at a fixed elevation. The next step is to initialize the platform and encoder.

SECTION IV

System Initialization

A. System Start-up

At this point, the DCPH should be securely attached to the tide gage house wall, all cables connected and incremental encoder mechanically connected to the input shaft of the tide gage by the chain sprocket assembly.

1. Connect the programming set to the DCPH.

2. Turn the DCPH and the 545A programming set on.

3. The DCPH is now ready to accept the configuration program.

B. Programming:

The following procedure and attached programming example will act as a guideline for programming the DCPH system.

1. Pull up NOS float as outlined in the NOS Float Removal and Logging Procedures. (Section III, Page 6, Step 4.)

2. Connect the 545A Programming Set, wait for prompts to run their course, then press "PROG".

3. After the display prompt press "#2". The platform is now in the PROGRAM mode.

4. Download new program residing in the 545 Programmer by pressing "LOAD", then the "ENTER" key.

5. Prepare to change the 'CURRENT VALUE' number in the program for channels 1 through 4 by first pressing "CH", "#1 (#2, #3, #4)", "SCAN", and "▲".

6. Enter for 'CURRENT VALUE' the calibration number established for this site. Be sure to include four digits with decimal (XX.XX).

   NOTE: On-site system calibration numbers should be left to the on-site technician(s). They know what offsets are needed to provide data that satisfies the local MIC.

7. Repeat Steps 5 and 6 for channels 2 through 4.

8. Note: DCPH time offset by pressing “TIME” key then "▼" key until ‘DIFF TIME - DCP (PRG) LEAD' is displayed. It should read 00:00:00 or 00:00:0l.

9. If the reading in Step #8 is greater than two (2) seconds, correct as follows: -Press "#0" then enter. Next press " # 1 " . Now "DIFF TIME’ should be correct.

10. Scroll up to 'GMT time'. Select a time from the following list (one hour time segment) that is at least 15 minutes ahead of the GMT readout. Allow sufficient time to enter new times and save program.

Min	4:30	34:30	
	10:30	40:30	
	16:30	46:30	
	22:30	52:30	
	28:30	58:30	Sec.

11. After time has been selected press "SCAN", then "▼". The display will say 'PO4 START OF MEAS XX:XX:XX'. Enter new time.

12. Display will now ask if you want to change the start time of all channels. You do, so enter "#l" for yes.

13. Next we want to change start time of Channel 5, the battery voltage channel.

14. Press "CH" then "#5" then "ENTER". This gets you in the Channel 5 area.

15. Again press "SCAN", then scroll down key. Enter new 'START OF MEAS' time. Select the next nearest time from below.

GMT	00:14:00	06:15:00	12:15:00	18:15:00

16. Check and note the present battery voltage by pressing "F SCAN". The reading should be between 12.1 and 13.5 volts.

17. Next save the program now in the DCPH by pressing "SAVE" then After program is saved the display will say

18. Make any additional checks you feel are necessary with the Programming Set.

19. Now you are ready to place DCPH in the run mode. To accomplish this, press the "RUN" key.

20. Next, check to see if you have pressed the "RUN" key within your selected 15-minute window. Press "N SCAN" and note time to first scan. There should be a time between 15 minutes and 2 seconds on the display. If the time should read something like 23 hours, you have missed the count.

21. If you started too late, you now have to stop the program by pressing "PROG", "#2", "ENTER", then return to Step 10 and try again.

22. Now monitor "N SCAN" and "LAST" functions until the first data appear under the "LAST" display. It should read the same as that entered in step 7.

23. Wait until the "N SCAN" display reads one (1) second. This means data are being collected.

24. Return the float to service and continue with the <u>NOS Float Removal and Logging Procedures</u>.

25. Allow DCPH to make at least two (2) readings after float has been lowered. Each reading takes six (6) minutes and can be viewed by "LAST" and scroll up/down keys. These readings should correspond to the NOS readings after offset is considered.

SECTION V

Documentation

A. Instruction Manuals

The DCPH telephone system comes from the factory with an "Operating and Service Manual." This manual contains both technical and general information for the DCPH system and the Handar 545A programming set. A separate Operating and Service Manual is provided for the voice synthesized modem.

B. Special Drawings

The three drawings needed for the installation of the DCPH are described below. These are contained in the Attachments and Drawings section.

1.	D105-1MP1-SD001	Handar Incremental Shaft Encoder Mounting Bracket
2.	D105-1-FD002	Handar Shaft Encoder 436A for Marine Mounting Configuration
3.	D900T-FD001	Handar Marine Tide Gage Wiring Configuration

c. Maintenance Schedule

The DCPH should be inspected annually. The cover should be opened to check for any moisture leaks or accumulation. The connectors to the system should be inspected for leaks and corrosion on the contacts and replaced or repaired if leakage is evident. Calibration of the system should be attempted in a well equipped maintenance facility.

D. EMRS Reporting

Continue to report maintenance activity on the DCPH system under EMRS reporting code DCPH as described in EHB-4; also the National Weather Service Operations Manual Chapter A-14.

E. Instrumental Equipment Catalog

All stock items for maintenance of the DCPH system will appear in the Instrumental Equipment Catalog, EHB-1.

SECTION VI

Maintenance Training

A* Initial Training

A training course was held September 10, 1984 in Galveston, Texas, to familiarize field technicians and AESs with the installation and programming of the DCPH system. The class had ten (10) attendees from the Eastern and Southern regions.

The electronics technicians should familiarize themselves with sections 3.0, 6.0, 7.0, and 12.0 in the Operating and Service Manual before attempting to program the 545A programming set. The MIC should be consulted to decide what information is to be programmed into the 545A programming set, as each tide gage site is unique. If there are any questions about programming the 545A programming set, the technician should call his AES or regional specialist. See Attachment 3 for example of a typical HANDAR 540A tide gage program.

B. NWSTC Training

All future classes on this equipment will be held at NWSTC. A course is being prepared by NWSTC; the course number is not available at this time.

SECTION VII

Maintenance Policies

A. Maintenance Responsibilities

The organizational responsibility for installation and maintenance of the DCPH will be the electronics technician(s) currently maintaining the Bristol Metameter. Responsibilities are generally defined in the NWS Operations Manual, Chapter H-50.

B. Extent of On-Site Repair

At the conclusion of the equipment warranty period (1 year from date receipt), correction repairs will consist of card 1eve1, or whole system replacement. Replacement items should be requested through normal logistics channels.

c. Equipment Guarantee

Handar products are warranted against defects in materials and workmanship. This warranty applies for one year from date of Government acceptance. Government acceptance will be deemed to have occurred no more than 30 days after the receipt of goods. Handar will repair or replace products which prove to be defective during the warranty period and Handar will pay for transportation to and from the agency location. Handar does not warrant batteries or damage caused by faulty batteries. No other warranty is expressed or implied. Handar is not liable for consequential damages.

During the 1-year warranty period, the electronics technician(s) with knowledge of any failure to a model 540A system should contact Handar. (Mr. Clyde Davis or Hank Fallek, Sunnyvale, California, 408-734-9640). This should be done before returning unit to NRC.

D. Staffing

Staffing requirements will not be increased over the present workload assigned to the Bristol Metameter as a result of installation of this equipment. Workforce requirements are estimated to be near present DCPH levels.

E. Disposition of Replaced Equipment

An H-14 Form is to be filled out when returning Bristol Metameters replaced by the DCPH system to NRC. These return

units are to be placed into special project number 848, Item 1. Final disposition of this equipment will be decided by the Marine Program Manager, Mike Uhart.

F. Firmware Revisions

The regional headquarters will be notified by the Engineering Division of any firmware (EPROM's) changes and course of action to be taken.

ATTACHMENT 1

EQUIPMENT FOR HANDAR 540A TIDE GAGE
(Telephone System)

Description

1. 540A Multiple Access Data System with the following cards:

1.	Extended memory board	- 540-1000
2	Speech Synthesizer/Modem card	- 540-7018
	Support Card	- 540-6002
	48K ROM/16K RAM CPU card	- 540-6016P
5.	Incremental Encoder Interface Board	- 540-7014
6.	Battery 12V 24AH	

2. 545A Programming Set/Accessories:

   1. 545A Programming Set
      Operating and Service Manual
   3. Battery charger, .5amp with cable

3. Connector/cables:

   26 pin mating connector
   1. Ribbon cable
   3. Encoder cable

4. Sensor:

   1. 436A - Incremental shaft encoder

5. Hardware:

   Brackets and Hardware (for incremental encoder)
   1. Chains (3 ea.)
   3. Chain sprockets
      1 ea. -- 3MP-32A-35
      1 ea. -- 3MF5A-70

ATTACHMENT 2

NOS

Site Location, Station References, Local Observers and Contractors

NOAA - National Ocean Service
WSC 1, Room 604
6001 Executive Blvd.
Rockville, Maryland 20852

Mark Allen, N/OMS121 (301) 443-8807
FTS 443-8807

NOS Contractors by Area

Florida and Mississippi:

Chapin & Associates
4591 Woodlane Circle
Tallahassee, FL 32303

Lee Chapin (904) 562-4038

Louisiana and Texas:

Martel Laboratories
5290 North Belt Drive
Humble, TX 77396

Rory Hammond (713) 441-1982

All other East Coast stations including Puerto Rico and USVI stations:

NOAA, National Ocean Service
Atlantic Marine Center, N/MOA211
439 West York Street
Norfolk, VA 23510

Telephone: Tom Orlowski (804) 441-6477
FTS 827-6477

Southern California, from San Diego to Port San Luis:

Coast Survey Ltd.
10345 Fasano Drive
Lakeside, CA 92040

Telephone: Miller Tonkel (619) 562-2127

Attachment 2 (Cont'd)

All other West Coast stations including Alaska, Hawaii, and the Pacific Islands.

NOAA, National Ocean Service
Pacific Marine Center
Pacific Tide Party, N/MOP221
7600 Sand Point Way, N.E.
Seattle, WA 98107

Telephone: Mickey Moss (206) 527-6360
FTS 399-6360

Attachment 3

Typical Tide Data Program and Corresponding Data Terminal Outputs

```
P    ID                          ABCDEF09
P    STATION TIME                17:20:20
P    YEAR (XX)                       84
P    DCP JULIAN DATE                165
P    GOES PRI XMT MODE               00
P    GOES SEC XMT MODE               00
P    TEL #:AREA CODE              0-000
P    TEL #:LOCAL                269-1111
P    MODEM XMT FORMAT                03
P    1ST DIAL TIME               00:00:00
P    DIAL INTERVAL               00:00:00
P    TEL EMG XMIT 1=ON               01
P    AUTO DUMP? 1=Y 0=N              01
P    AUTO DUMP FORMAT                03
P    1ST LOG TIME                00:00:00
P    LOG INTERVAL                00:00:00
P    DRIVE MODE                      00
P    LOG MODE                        00
P    VOICE OUTPUT MODE               02
P    TOUCH TONE PASSWD                6
P    CHANNEL NO.                     01
P01  SENSOR TYPE                     11
P01  SENSOR NAME TAG                 18
P01  CARD SLOT #                     01
P01  0=CW> , 1=CCW>                  00
P01  <VALUE / INCREMENT          00.01
P01  CURRENT VALUE               02.83
P01  MEAS INTERVAL          00:06:00
P01  START OF MEAS          17:22:00
P01  LEVEL 1 MEAS TYPE           002
P01  LEVEL 1 SAMP INTVL     00:00:01
P01  LVL1 DATA SET SIZE         00180
P01  LEVEL 2 MEAS TYPE           001
P01  XMIT 2 OR 3 BYTES?          03
P01  HIGH LIMIT                  03.00
P01  LOW LIMIT               NO LIMIT
P01  HIGH DIFF LIMIT         NO LIMIT
P01  LOW DIFF LIMIT          NO LIMIT
P    CHANNEL NO.                     02
P02  SENSOR TYPE                     11
P02  SENSOR NAME TAG                 18
P02  CARD SLOT #                     01
P02  0=CW> , 1=CCW>                  00
P02  <VALUE / INCREMENT          00.01
P02  CURRENT VALUE               02.83
P02  MEAS INTERVAL          00:06:00
P02  START OF MEAS          17:22:00
P02  LEVEL 1 MEAS TYPE           002
P02  LEVEL 1 SAMP INTVL     00:00:01
P02  LVL1 DATA SET SIZE         00180
P02  LEVEL 2 MEAS TYPE           000
P02  XMIT 2 OR 3 BYTES?          03
P02  HIGH LIMIT                  04.00
P02  LOW LIMIT               NO LIMIT
P02  HIGH DIFF LIMIT         NO LIMIT
P02  LOW DIFF LIMIT          NO LIMIT
P    CHANNEL NO.                     03
P03  SENSOR TYPE                     11
P03  SENSOR NAME TAG                 18
P03  CARD SLOT #                     01
P03  0=CW> , 1=CCW>                  00
P03  <VALUE / INCREMENT          00.01
P03  CURRENT VALUE               02.83
P03  MEAS INTERVAL          00:06:00
P03  START OF MEAS          17:22:00
P03  LEVEL 1 MEAS TYPE           002
P03  LEVEL 1 SAMP INTVL     00:00:01
P03  LVL1 DATA SET SIZE         00180
P03  LEVEL 2 MEAS TYPE           000
P03  XMIT 2 OR 3 BYTES?          03
P03  HIGH LIMIT                  06.00
P03  LOW LIMIT               NO LIMIT
P03  HIGH DIFF LIMIT         NO LIMIT
P03  LOW DIFF LIMIT          NO LIMIT
P    CHANNEL NO.                     04
P04  SENSOR TYPE                     12
P04  SENSOR NAME TAG                 12
P04  MEAS INTERVAL          06:00:00
P04  START OF MEAS          18:15:00
P04  LEVEL 1 MEAS TYPE           000
P04  XMIT 2 OR 3 BYTES?          03
P04  HIGH LIMIT              NO LIMIT
P04  LOW LIMIT               NO LIMIT
P04  HIGH DIFF LIMIT         NO LIMIT
P04  LOW DIFF LIMIT          NO LIMIT
```

ID

Date/time

```
ABCDEF09 165 18:19:57
01 18:18:59 00:06:00 02.83
02 18:18:59 00:06:00 02.83
03 18:18:59 00:06:00 02.83
04 18:15:00 06:00:00 13.6
```

Channel No.

Tide data

Time and data sample

data scan interval

```
165 18:20:12
DUMP DATE?165
DUMP TIME?17:0
ABCDEF09 165 18:20:27
01 17:00:59 00:06:00 //.// //.// //.// //.// 02.83 02.83 02.83
 02.83 02.83 02.83 02.83 02.83 02.83 02.83
165 18:20:31
DUMP DATE?
```

Limit exceeded

```
ABCDEF09 165 18:25:14
01 18:24:59 00:06:00 03.83<
02 18:24:59 00:06:00 03.83
03 18:24:59 00:06:00 03.83
04 18:15:00 06:00:00 13.6
BYE    0
ABCDEF09 165 18:43:16
01 18:42:59 00:06:00 04.79<
02 18:42:59 00:06:00 04.79<
03 18:42:59 00:06:00 04.79
04 18:15:00 06:00:00 13.6
BYE    0
```

Emergency data call from DCP to terminal

DCP hangs up

DCP in local use

```
BUSY
ABCDEF09 165 18:52:43
01 18:48:59 00:06:00 06.74<
02 18:48:59 00:06:00 06.74<
03 18:48:59 00:06:00 06.74<
04 18:15:00 06:00:00 13.6
```

```
BUSY
ABCDEF09 165 19:06:58
01 19:00:59 00:06:00 02.69
02 19:06:59 00:06:00 02.69
03 19:06:59 00:06:00 02.69
04 18:15:00 06:00:00 13.6
```

Routine data call by telephone

```
165 19:07:05
DUMP DATE?165
DUMP TIME?17:30:
ABCDEF09 165 19:07:20
01 17:30:59 00:06:00 02.83 02.83 02.83 02.83 02.83 02.83 02.83
 02.83 02.83 03.83<03.83<03.83<04.79<06.74<04.94<02.69 02.69
165 19:07:24
DUMP DATE?
```

Routine data call by terminal requesting a block of tide data

NOTE: Channel No. 1 is the primary data channel. This channel is taking 180 samples at once a second, then averaging the samples. This is repeated every 6 minutes. Channel No. 2 and 3 are used to flag an exceeded limit. Channel No. 4 is the DCP battery voltage.

ATTACHMENT 4

INCREMENTAL ENCODER WIRING TABLE

436A Incremental Encoder	TB-1 Encoder-Bracket	26-Pin Connector-Panel Encoder/TB	Incremental Encoder Board J1 Pin #	Incremental Encoder Interface Board Description of Input/Output
E-	-5-	-a-	-3-	Incremental Encoder Signal (01)
D-	-4-	-Z-	-4-	Incremental Encoder Signal (02)
C-	-3-	-Y-	-5-	Incremental Encoder SW'D 5V (10 KC)
F-	-6-	-X-	-6-	Incremental Encoder Ground

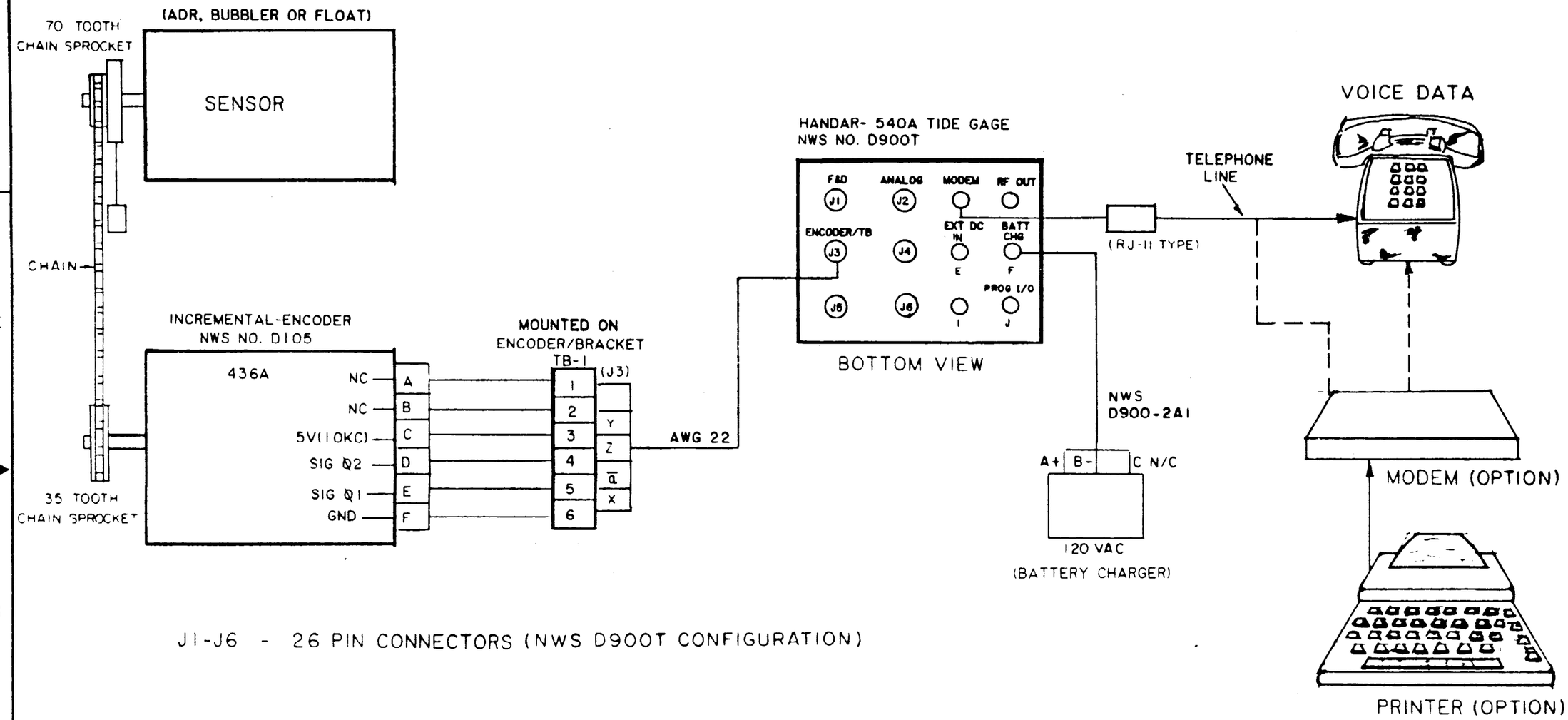

J1-J6 - 26 PIN CONNECTORS (NWS D900T CONFIGURATION)

UNLESS OTHERWISE SPECIFIED DIMENSIONS ARE IN INCHES TOLERANCES ANGLES ±.5° 3 PLACE DEC ± 005 2 PLACE DEC. ± .02	ENGINEERING DIVISION SILVER SPRING MD 20910	U.S. DEPARTMENT OF COMMERCE NATIONAL OCEANIC & ATMOSPHERIC ADMINISTRATION NATIONAL WEATHER SERVICE
MATERIAL	PREPARED R.E.B. 1-2-85	HANDAR-540A MARINE TIDE GAGE-WIRING CONFIGURATION
	CHECKED	
	DESIGN	
	APPROVED BY	SIZE / DATE / DRAWING NO D900T-FD001
	APPROVED BY	SCALE / SHEET 1 OF 1 / FILE

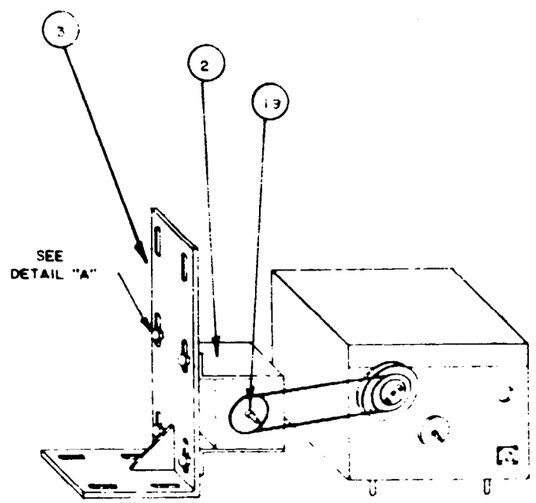

NORMAL SET UP

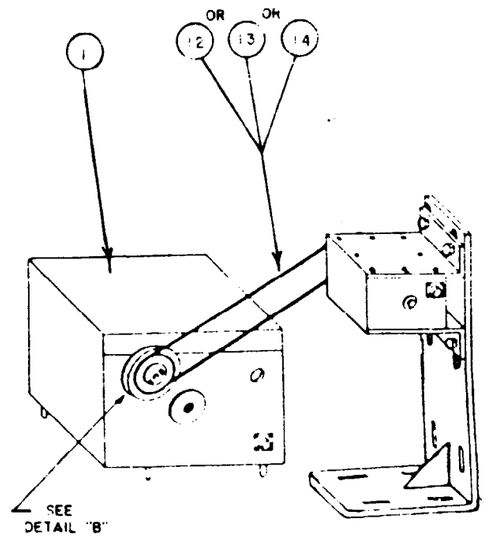

REVERSE SET UP

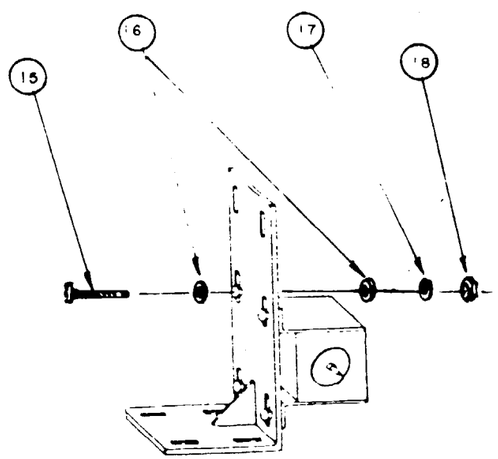

DETAIL "A"

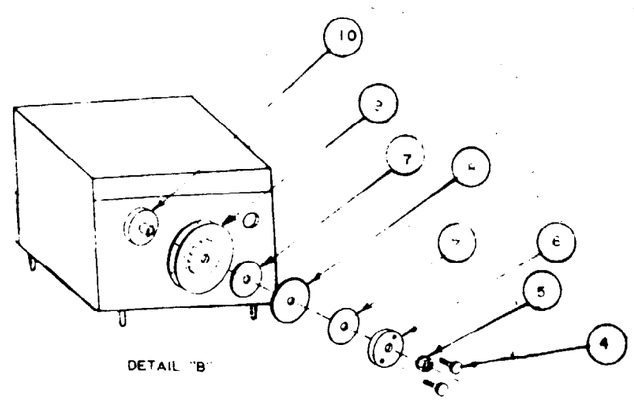

DETAIL "B"

MOUNTING CONFIGURATIONS

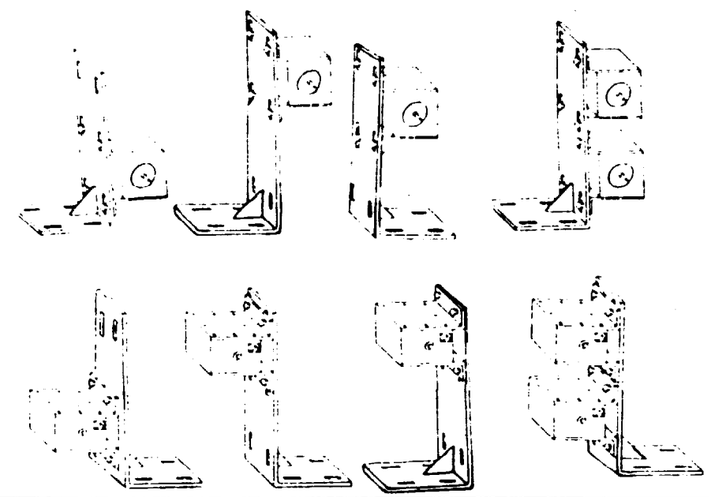

FIND NO.	ELEC REF DES	NOMENCLATURE OR DESCRIPTION	QTY REQD	PART OR IDENTIFYING NO.	DWG SIZE	CODE IDENT	SPECIFICATION OR MATERIAL
21							
20							
19		CHAIN SPROCKET		3MP 32A-35		39440	
18		NUT 1/4"-20	4				STAINLESS STEEL
17		LOCK WASHER 1/4"	4				STAINLESS STEEL
16		FLAT WASHER 1/4"	4				STAINLESS STEEL
15		HEX HD BOLT 1/4"-20 3/4"	4				STAINLESS STEEL
14		MIN-E-PITCH CHAIN	1	3CCF-220-E		39440	
13			1	3CCF-170-E		39440	
12			1	3CCF-150-E		39440	
11						39440	
10		HUB	1	871D079		62206	
9		DRIVE PULLEY	1	655A511		62206	
8		CHAIN SPROCKET	1	3MF 5A-70		39440	1/2" BORE HUBLESS
7		FLAT WASHER	2	377B002		62206	
6		FLANGE	1	363B075		62206	
5		CASTLE NUT	1			62205	
4		THUMB SCREW	2	396B019		62206	
3		ENCODER MOUNTING BRACKET	1	D105-1MP1			D105-1MP1-90001
2		HANDAR SHAFT ENCODER	1	MODEL 436A			
1		F & P ADR	1				

LIST OF MATERIAL

UNLESS OTHERWISE SPECIFIED
DIMENSIONS ARE IN INCHES
TOLERANCES ANGLES ± .5°
3 PLACE DEC ± 005
2 PLACE DEC ± 02

MATERIAL

ENGINEERING DIVISION
SILVER SPRING MD 20910

PREPARED	D EDELEN	
CHECKED		
DESIGN		
APPROVED BY	Harry Hoppe	
APPROVED BY		

U.S. DEPARTMENT OF COMMERCE
NATIONAL OCEANIC & ATMOSPHERIC ADMINISTRATION
NATIONAL WEATHER SERVICE

HANDAR SHAFT ENCODER (436)
MARINE MOUNTING CONFIGURATION

SIZE	DATE	DRAWING NO
	3/20/85	D105-1-FD002
SCALE	SHEET	FILE

REVISIONS					
Zone	Ltr.	Description	Date	By	App'd.

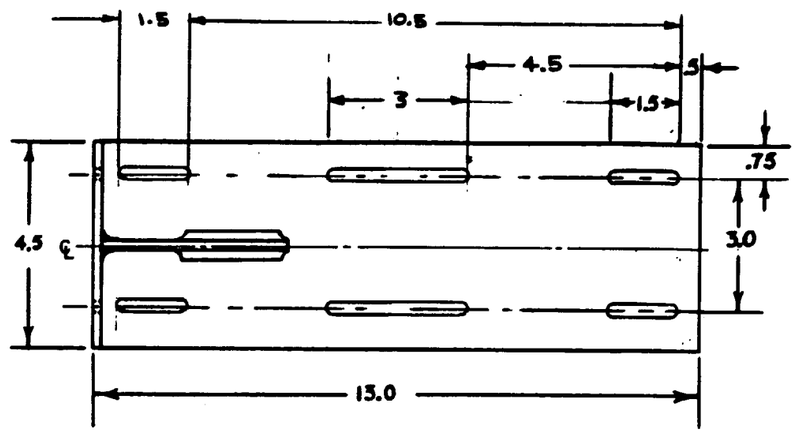

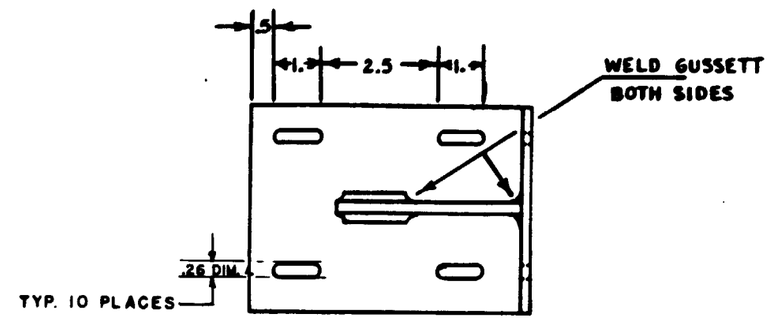

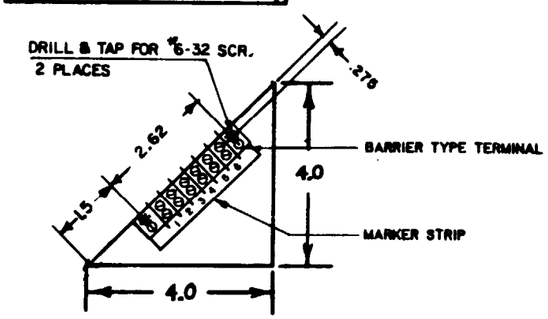

GUSSETT 0.187 THK.

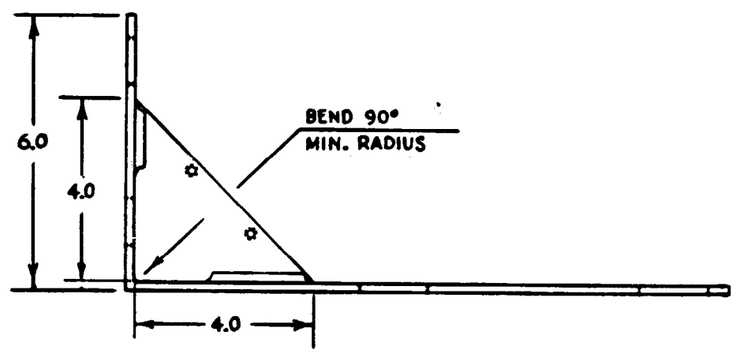

MATERIAL: AL 0.187 THK. NO. 5052
FINISH: BLACK ANODIZE
DEBURR ALL HOLES AND EDGES

1. HEX HD LAG BOLT 1/4 1 LG S. STL 4 REQD
2. HEX HD BOLT 1/4-20 3/4 LG S. STL 4 REQD
3. FLAT WASHER 1/4 S. STL 8 REQD
4. LOCK WASHER 1/4 S. STL 4 REQD
5. NUT 1/4-20 S. STL 4 REQD
6. MACH. SCREW 6-32 x 7/16 LG. S. STL. 2 REQ'D
7. HEX HD LAG BOLT 1/4 LG S. STL 2 REQ'D (TO SECURE ADR)
8. MARKER STRIP MS 6-140 1 REQ'D
9. BARRIER TYPE TERMINAL 6-140 1 REQ'D

UNLESS OTHERWISE SPECIFIED:
DIMENSIONS ARE IN INCHES
TOLERANCES: ANGLES ± .5°
3 PLACE DECIMALS ± .005
2 PLACE DECIMALS ± .02

ENGINEERING DIVISION
SILVER SPRING, MD. 20910

PREPARED	R. E. B.	8-23-83
CHECKED		
DESIGN		
APPROVED BY	H. Hoppe	
APPROVED BY		

U.S. DEPARTMENT OF COMMERCE
NATIONAL OCEANIC & ATMOSPHERIC ADMINISTRATION
NATIONAL WEATHER SERVICE

HANDAR INCREMENTAL SHAFT ENCODER
MOUNTING BRACKET

SIZE	DATE	DRAWING NO
C	9/1/83	D105-1MP1-SD001
SCALE		SHEET / FILE

MANUAL INDEX - RIVER GAGES

Number	Title
10-101	Instruction Manual for Resistance River Gage Type "E", August 1962
10-103	Instruction Bulletin for Series 1540 Punched Tape Recorder (Fischer & Porter), Revision 2
10-104	Instruction Bulletin for Series 1542 Punched Tape Recorder (Fischer & Porter), Revision 3
10-105	Instruction Bulletin - Installation of Telemetering Parts in Series 1540 Punched Tape Recorders (Series A5 and Higher). Revision 1, (Fischer & Porter)
10-112	Parts List 35-1540-1 for Punched Tape Recorders (Fischer & Porter Model 1542 Level Recorder), Revision 1

Items 10-100, 10-102, and 10-106 through 10-111 have been deleted.

U. S. DEPARTMENT OF COMMERCE
LUTHER H. HODGES, Secretary
WEATHER BUREAU
F. W. REICHELDERFER, Chief

INSTRUCTION MANUAL FOR

RESISTANCE RIVER GAGE

TYPE E

INSTRUMENTAL ENGINEERING DIVISION

Washington, D.C.

August 1962

INSTRUCTION MANUAL FOR RESISTANCE RIVER GAGE, TYPE E

TABLE OF CONTENTS

SECTION 1 - GENERAL DESCRIPTION

1.1. SYSTEM COMPONENTS AND FUNCTIONS
- 1.1.1. General
- 1.1.2. Types
- 1.1.3. Transmitters
- 1.1.4. Housing
- 1.1.5. Floats and Cable
- 1.1.6. Indicators

1.2. CIRCUITRY
- 1.2.1. The Bridge Circuit
- 1.2.2. Linearity Effects
- 1.2.3. Temperature Effects

SECTION 2 - INSTALLATION

2.1. PRELIMINARY WORK
- 2.1.1. Line Installation
- 2.1.2. Installing and Wiring Transmitter Potentiometer
- 2.1.3. Bench Testing

2.2. TRANSMITTER
- 2.2.1. Mounting in Gage House
- 2.2.2 Installing Float Cable

2.3. INDICATOR
- 2.3.1. Location
- 2.3.2. Battery and Line Connections

SECTION 3 - CALIBRATION

3.1. TWO-WAY COMMUNICATIONS
- 3.1.1. Systems and Connections

3.2. CALIBRATION PROCEDURE
- 3.2.1. Adjustment of Line Balancing Potentiometers
- 3.2.2. Setting Pulley Wheel to Stage
- 3.2.3. Special Stage Settings
- 3.2.4. Transmitter Decals

SECTION 4 - OPERATION

4.1. INDICATOR UNIT
4.1.1. Reading the Stage

SECTION 5 - MAINTENANCE

5.1. GENERAL
5.1.1. Routine Checking

5.2. TRANSMITTER
5.2.1. Cleaning
5.2.2. Pulley, Hub, and Shaft Replacement

5.3. INDICATOR
5.3.1. Batteries
5.3.2. Potentiometer and Dial
5.3.3. Trouble Shooting - Bridge Circuit

SECTION 6 - PARTS LIST

6.1. TRANSMITTER
6.1.1. Pulley Assembly
6.1.2. Accessories

6.2. INDICATORS
6.2.1. Type E Gages

SECTION 7 - ILLUSTRATIONS AND DRAWINGS

Fig. 1. Basic Circuit
Fig. 2. Transmitter Wiring
Fig. 3. Type E Transmitter
Fig. 4. Type E Indicator
Fig. 5. Four Inch Float
Fig. 6. Wiring Diagram, Type E Indicator
Fig. 7. Wiring Diagram, Type E Transmitter
Fig. 8. Transmitter Housing
Fig. 9. Assembly Details, Transmitter (Dwg. 450.4221/K)
Fig. 10. Hub and Pulley (Dwg. 450.4221/L)
Fig. 11. Support Casting (Dwg. 450.4221/M)

INSTRUCTION MANUAL FOR RESISTANCE RIVER GAGE, TYPE E

SECTION 1 - GENERAL DESCRIPTION

1.1. SYSTEM COMPONENTS AND FUNCTIONS

1.1.1. GENERAL: The water stage gaging system described in this manual is of the remote indicating, direct reading type. For simplicity, the system is referred to as a resistance river gage, type E. It consists essentially of two potentiometers in a Wheatstone Bridge circuit, with a microarmmeter null indicator. One of the potentiometers is located in a river gaging well house and is coupled by means of a pulley wheel and beaded wire cable to a float and counterweight in such a manner that changes in water level will produce corresponding changes in the positioning of the potentiometer arm.

The second potentiometer and the null indicator are housed in a metal cabinet at the observer's site. By adjusting this potentiometer for a null balance on the meter, the stage or height of the water can be read directly to tenths of a foot from a dial coupled to the potentiometer shaft. Three wires are needed to connect the type E indicator to the gage house.

In some installations a separate piece of equipment known as a gage alarm is used in connection with the type E gage to sound a warning signal if the water reaches an arbitrarily established level. Where a gage alarm is used an additional wire will be needed to connect it to the gage house.

1.1.2. TYPES: Besides the type E gage described in this booklet, there are two other models of the resistance river gage in use: The type A gage and the type D gage. Both of these early model gages are described in a separate publication entitled, "Instruction Manual for Installation, Calibration, Operation and Maintenance of Water Stage Gaging System, Remote Indicating, Resistance Type," dated December, 1960. Type A gages have serial numbers running from 1 to 200 inclusive, type D gages have serial numbers running from 501 to 700 inclusive, while the type E gages have serial numbers commencing with the number l-62 and running 2-62, 3-62, etc.

1.1.3. TRANSMITTERS: Figure 3 shows a type E transmitter unit. It consists of an aluminum casting supporting a pulley wheel by means of a stainless steel shaft riding in precision bearings. The shaft is coupled to a 40-turn potentiometer by a non-rigid linkage. Pulley wheels of 1-, 1.5- and 2-ft. circumference can be used to give maximum gage ranges of 40, 60 and 80 feet respectively.

The pulley wheel shaft also drives a Veeder Root counter through a pair of 1:1 ratio precision gears. The counter is used to indicate the degree or number of turns of rotation of the potentiometer arm to tenths of a turn as an aid in calibrating the system. Only on 40-foot transmitters is this reading directly related to actual feet of stage. On 80-foot gages the counter reading must be multiplied by 2.0 to give feet of stage; on a 60-foot gage the reading must be multiplied by 1.5 to give feet of stage.

1.1.4 HOUSING: A.054 gauge aluminum housing measuring 12 inches long by 91-4 inches wide by 9-l/4 inches high, including a 1-1/4 inch high base pan, is used to contain and protect the transmitter in the gage house (see Fig. 8).

1.1.5. FLOAT AND CABLE: A special float measuring 4 inches diameter by 7-3/8 inches overall length and weighing 32.5 ounces (See Fig. 5) is used to drive the transmitter-pulley wheel. The float is coupled to the pulley wheel by .040-inch stainless steel cable, beaded every 3 inches with l/8-inch beads. A 20-ounce counterweight is used on the idle end of the float cable.

1.1.6. INDICATORS: A Type E indicator unit is shown in Fig. 4. The stage indicating dial is at upper right on the front panel and gives readings to tenths of a foot directly in Arabic numerals so that there is no need for observers of limited technical training to worry over dial interpolations. At upper left on the panel is the null indicating microammeter. Below it is a three-position toggle switch which automatically returns to neutral or OFF position when released. This stitch activates the bridge circuit when it is depressed or raised. When depressed, it permits coarse adjustment of the dial. When raised, the bridge sensitivity is increased and a fine adjustment of the bridge balance (indicated by a null or zero center positioning of the meter) can be made. Line connections are made to a terminal strip inside the cabinet, accessible by raising the lid. Two line balancing potentiometers are mounted on top of the inside chassis. Space for the battery is available inside the case.

1.2. CIRCUITRY

1.2.1. BRIDGE CIRCUIT: The schematic diagram of a type E indicator is shown in Figure 6; that of a type E transmitter in Figure 7. Line connections between the two units are made to the correspondingly labelled terminals "H", "C", and "L". A ground wire connects to terminal "G". In operation a source of potential (BT) is applied between the sliders of the line balancing potentiometers RA and RB, producing two branch currents, the first through the left hand portion of RA, RY, and the left hand portion of RB. The second branch current goes through the right hand portion of RA, RC, the upper line, Rx, the lower line, and the right hand portion of RB. By suitable adjustment of RA, the potential drop across its right hand portion plus the drop across the resistance of the upper line, can be balanced by the drop across the left hand portion of RA. Similarly, an adjustment of RB can cancel out the drop across the resistance of the lower line. The circuit then reduces to essentially the following:

Fig. 1

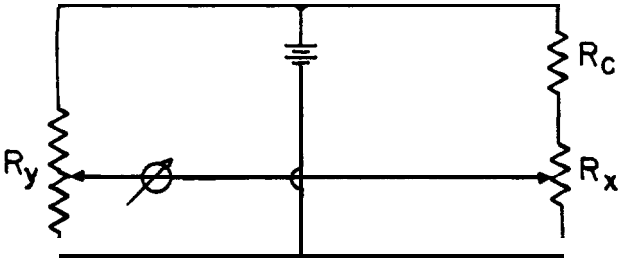

Any position of the slider on RX can now be balanced (meter null) by only one point on Ry. The dial on RY reads from 00.0 to 100.0 for the full range of RY. If, now, RX is a 40-turn potentiometer driven in 1:1 ratio by the stilling well float and if the resistance of RX is 40% of RX + RC then each foot of stage in the well can be read directly on the dial of RY to tenths of a foot up to 40 feet. This assumes, of course, that float linkage is so adjusted that the lowest position of Rx corresponds to zero stage. If the pulley ratio of Rx is 1.5:1 and if RX; is 60% of RX + RC then the stage can be read to 60 feet. With a pulley ratio of 2:l and with RX 8O% of RX 80%, a maximum stage of 80 feet can be read on the dial of RY. The values of RC required for the various maximum stage ranges with type E gage are as follows:

STAGE RANGE	RC (Ohms)	PULLEY CIRCUMFERENCE
40'	37,500	12"
60'	16,670	18"
80'	6,250	24"

The gage has a two-position switch for meter sensitivity permitting the initial balancing operation to be started for any position of the dial or pulley, and yet allowing the meter to be used at full sensitivity for a fine adjustment of the dial. A small neon lamp is connected from one of the bridge lines to ground to discharge any static potentials that may accumulate on the lines.

1.2.2. LINEARITY EFFECTS: The accuracy of the bridge circuit, once the initial adjustment to cancel out line resistance and potentiometer end resistance effects has been made, can be affected by two things: linearity of the potentiometer windings and temperature effects on the external lines and the external potentiometer. Linearity error is a measure of the amount by which the resistance vs. length characteristic of the potentiometer winding varies from a straight line, and depends upon the degree of care taken in making the potentiometer. In general it tends to be greatest at mid-range of the potentiometer and zero at the end points. Because the linearity error in feet of RX is reduced by the percentage that RC is of (RX + RC), it is apt to be greatest in an 80' gage and least in a 40' gage. The potentiometers used are selected so that the maximum linearity error of the gage is less than 0.1 foot of stage.

1.2.3. TEMPERATURE EFFECTS: Temperature errors can occur when changing ambient temperatures increase or decrease the resistances of the field lines and the remote potentiometer from the values they had at calibration time. Unlike linearity errors temperature errors are greatest at the ends of the dial range and are zero at mid-range (50.0 on dial). The maximum tolerable temperature error is the limiting factor on the length of line that can be used between the transmitter and the indicator. This has been arbitrarily set at 0.1 foot of stage, for an overall average line temperature change of +30°C.

SECTION 2 - INSTALLATION

2.1. PRELIMINARY WORK

2.1.1. LINE INSTALLATION: When installing a gage it will generally be necessary to run cable or rent telephone lines for connecting the transmitter at the river gaging well house to the indicator at the observer's location. This should be carefully planned in advance, both from the point of view of cost, and because of limitations on line length that can be used, for reasons discussed in paragraph 1.2.3. In planning a line or cable installation, at least four wires should be run, three for the bridge circuit, and a fourth for a possible alarm circuit, and as a communication link. The tables below give the maximum line resistance and line length that can be used for connecting the "H" and "L" terminals of the transmitter and indicator (the resistance of the line connecting the "C" terminal, or of the fourth wire, is not critical):

MAXIMUM LINE RESISTANCE PER LEAD

MAXIMUM RANGE OF GAGE	40'	60'	80'
LINE RESISTANCE, OHMS	540	360	270

MAXIMUM LINE LENGTH, COPPER WIRE

WIRE GAGE B&S	No. 22	No. 20	No. 18	No. 16	No. 14
270 ohms	3.2 mi.	5.0 mi.	8.0 mi.	12.7 mi.	20.3 mi.
360 ohms	4.2 mi.	6.7 mi.	10.7 mi.	17.0 mi.	27.0 mi.
540 ohms	6.3 mi.	10.0 mi.	16.0 mi.	25.5 mi.	40.5 mi.

For short runs special cable having four No. 18 conductors is stocked at Regional Depots for this work. When arranging cable installation, the cable should be buried for as much of its path as possible, both as a protection against damage, and as a protection against temperature extremes.

Where telephone line is rented, two pair will be required and should be specified to be "continuous conductor line for D-C telemetering applications". As telephone line generally follows a devious path between any two points it may be difficult to estimate line resistance; however, most telephone installation departments can give a fairly close estimation of what the line resistance for a particular installation will be. In cases where a planned installation would require lines of excessive resistance, parallel wires can be used to keep the two critical leads ("H" and "L") within limits. For example, it is planned to operate a 60-ft. gage over 12 miles of telephone line having a resistance of 520 ohms per lead. In this case, three pairs of wires can be used, two each in parallel (260 ohms) for the "H", and "L" leads, and one each (520 ohms) for the non-critical "C" lead and spare or gage alarm lead.

When line installation has been completed, the lines should be carefully checked with a good quality ohmmeter *or* line testing bridge for conductor continuity and resistance, and for leakage resistance of the wires to each other and to ground. The line resistance should not exceed the value given in the first table above for the range of gage being installed. Leakage resistance should be not less than 40 megohms between wires, or 20 megohms to ground, measured in wet weather. These figures require that special care be paid to line insulation. Terminal boards, particularly in the well house, should be kept clean and free of dirt and sediment. Splices in buried cable should be so made as to insure a moisture proof connection. The use of "Scotch-Cast" cable splicing kits or similar leak-proof techniques is recommended.

While checking the lines, they should be identified and labelled "H", "C", and "L", at each end if they are not color coded. This can be easily done by having someone at the gage house label the lines and then connect each to ground in turn, and in a given sequence, allowing time for the man at the other end to identify the grounded wire with an ohmmeter and label it in the established order.

2.1.2. INSTALLING AND WIRING TRANSMITTER POTENTIOMETER: The 40-turn transmitter potentiometer is normally shipped unmounted to reduce danger of breakage. This component should be mounted and wired before taking the transmitter to the field site. Proceed as follows:

First, slip the potentiometer shaft partly through the hole in the upright member of the pulley support casting; then slip over the end of the shaft the lock washer, lock nut, and shaft coupler arm. This latter piece of hardware is usually shipped in a small cloth bag tied to the pulley wheel support casting. Tighten the potentiometer lock nut so that the potentiometer is securely mounted with terminals up, and its shaft in line with the pulley wheel shaft. Turn the potentiometer shaft clockwise (facing shaft end) with the fingers until it reaches the limit of its travel, Next, turn the pulley wheel until the V-R counter reads 000. Now, holding both shafts so that they do not turn, engage the coupling arms, and tighten their set screws securely. It should now be possible by turning the pulley wheel to advance the counter dial and the potentiometer arm smoothly and evenly. CAUTION: Turn the pulley wheel gently in the vicinity of the end points to avoid slamming the potentiometer arm against its stop. To do so, may irreparably damage the potentiometer. The counter should read exactly 000 at minimum position and 400 at maximum. Solder the leads from the terminal strip to the potentiometer in accordance with the sketch following:

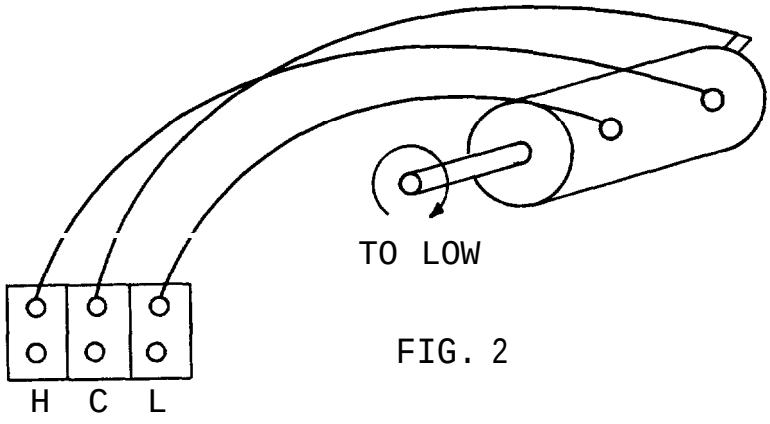

FIG. 2

2-.1..3. BENCH TESTING: Prior to actual installation of the transmitter and indicator in the field it is recommended practice to give them a bench test. Such testing, where both transmitter and indicator can be observed together can (a) permit the operator to grasp more readily the calibration procedure, (b) point up immediately any defects in the equipment *or* wiring, (c) enable the potentiometers to be checked for excess linearity error, and (d) permit the indicator line balancing potentiometers to be set to their approximately correct positions, thus simplifying field calibration. To proceed, first connect the transmitter and indicator together by means of a dummy line, that is with short lengths of wire having in series with them , resistors of a value approximately equal to the actual field line resistances. Next, insert the battery in the indicator in accordance with paragraph 2.3.2., then calibrate as covered in paragraph 3.2.1. When this has been completed, the gage can be checked throughout its range by setting the pulley wheel to a number of evenly spaced positions (as determined by the V-R counter reading) and at each one balancing and reading the gage. The two readings should agree within 0.1 foot. Correct procedures for reading and balancing the gage are given in paragraph 4.1.1. It should be recalled that on 60' and 80' gages the V-R, counter reading must be multiplied by a conversion factor (1.5 for 60' gages; 2.0 for 80' gages) to make it agree with the dial indication. If the system cannot be made to calibrate or if the readings differ widely at one end of the scale, it is possible that the indicator has been wired for a different stage range (check Rc in the indicator) or there may be an open line or a defective component, as covered in paragraph 5.3.3. If readings disagree by a small amount in excess of O.l-ft. somewhere between the calibration points, an excessive linearity error is indicated and the potentiometers should be replaced.

2.2. TRANSMITTER

2.2.1. MOUNTING IN GAGE HOUSE: Most installations of the Resistance River Gage will be in established gage houses, which are usually of poured concrete

construction. Occasionally, however, it will be necessary to make an installation where a gage house with its associated stilling well is not presently available. A satisfactory stilling well can be constructed from galvanized, corrugaged steel culvert pipe, with the pipe supported against a bridge pier or other structure and a metal housing large enough to contain the instrumental equipment fitted to the top of the pipe. The vertical rise of the well pipe should be as nearly plumb as possible in order that tine float, beaded cable, and counterweight will not scrape the sides of the pipe unnecessarily. For a transmitter with a 12" circumference pulley, a 10" pipe is satisfactory for an 18" pulley, 12" pipe, and for a 24" pulley, 14" pipe. With use of idler pulley(s) the float and weight ends of the cable may be brought together to allow use of smaller diameter pipe.

It is recommended that wherever possible the transmitter be driven by its own float, beaded cable and counterweight. To make such an installation, clear a space on the gage house shelf large enough to accommodate the aluminum housing for the transmitter, and in addition permit the latches on the housing to be opened and closed. The location should be such that the float, cable, and counterweight for the gage will be able to clear the sides of the well and not become entangled in or interfere with other cables and floats that may be present.

Position the transmitter unit and its base on the shelf and with a sharp tool scribe on the base in suitable locations the positions for 2, 3 or 4 mounting screws to secure the base to the shelf, and also the location of the two holes for the float cable. These can be drilled in the base using a No. 10 drill for the mounting holes and a 5/8" drill or chassis punch for the two cable entrance holes. Note that these two latter holes will lie centered 1.91-inch either side of the center line of the base for a 1- ft. pulley; 2.87-inches for a 1.5-ft. pulley; and 3.82-inches for a 2-f-t. pulley. Next continue the two 5/8 inch holes through the shelf, after which the base can be secured to the shelf with No. 10 x 2" wood screws and washers. The three signal wires, "H", "C", and "L", can then be run through the grommeted cable entrance hole and connected to the correspondingly labeled terminals of the terminal block.

In cases where it is *not* possible to drive the transmitter from its own float and cable, it can be adapted to run from the pulley wheel of an A35 recorder, Telemark, or other float driven device. The cable is run over the recorder pulley, under an idler pulley and then over the pulley of the Resistance Gage. <u>Be sure to string the cable so that a rising float will cause both devices to indicate a rising stage</u>. If the recorder is operated by a perforated tape rather than by beaded cable, either its pulley wheel will have to be changed to one designed for beaded cable, or the pulley wheel of the Resistance Gage will have to be changed to one suited to perforated tape. In either case there probably will be special machine work involved in making the pulleys fit the hubs, so that pulleys for this type of installation should be ordered well in advance, specifying the type of conversion involved.

2.2.2. INSTALLING FLOAT CABLE: Cut a piece of float cable about 5-feet longer than the distance from the gage house shelf to the level of minimum stage in the well. Fasten the float to one end of this cable with a float hook, (I. E. D. Catalog No. D530-13) and lower it through the port beneath the well shelf until it floats in the water. Fish the other end of the cable up through the right-hand 5/8-inch hole, as viewed from the pulley wheel end of the transmitter, and down again through the left-hand hole (a rising float should turn the V-R counter to higher numbers). Fasten a 20-ounce counter-weight (I.E.D. Catalog No. D530-8) to the free end of the cable with a float hook and lower it through the port until it hangs free beneath the shelf.

2.3. INDICATOR

2.3.1. LOCATION: The indicator unit should be located where it will be convenient for the observer to read it and where it will be reasonably clean, dry, and not subject to extremes of temperature. Of course, ease of access to the lines or cable running to the gage house may also affect the choice of location of the indicator unit.

2.3.2. BATTERY AND LINE CONNECTIONS: The lines from the transmitter site and previously labeled "H", "C", and "L", should be connected to the similar-ly labeled terminals in the indicator unit. A ground wire should be run from the terminal labeled "G" to a good ground such as a cold water pipe or a standard l/2-inch or 5/8-inch ground rod sunk at least five feet into moist earth. Use an approved ground clamp and clean the pipe or ground rod well at the point of connection.

The battery should next be installed in the indicator. A 6-volt battery such as a Burgess F4BP, or Eveready 510s (NEDA 915) is required. Wire the red lead emerging from the indicator chassis to the + 6V battery terminal, and the black lead to the -6V terminal.

If it has not already been done, remove the wire jumper placed across the meter terminals for shipping purposes.

SECTION 3 - CALIBRATION

3.1. TWO-WAY COMMUNICATIONS

3.1.1. SYSTEMS AND CONNECTIONS: In calibrating the resistance river gage it is recommended that two people assist, one at the gage house and one at the observer's site, and that some form of 2-way communication be used be-tween them. It is a time-consuming and tiring job for one person to attempt it by himself. Two-way "walkie-talkie" radios or a pair of sound powered telephones can be used for communication. In the latter case the phones can be connected between the spare or gage alarm wire and ground at both ends for a temporary circuit while calibrating the bridge. However, disconnect the wire from the gage alarm when using it for this purpose. Of course, the connections should be returned to normal when finished.

3.2. CALIBRATION PROCEDURE

3.2.1. ADJUSTMENT OF LINE BALANCING POTENTIOMETER : To calibrate the bridge, it is necessary to balance out line resistance and potentiometer end resistance effects, and then set the transmitter pulley wheel for the exact stage at the time of calibration. The procedure is given below. First, however, the following things should be done: Remove the float cable from the pulley of the transmitter and check the potentiometer zero point. The V-R counter should read 000 for full clockwise travel of the potentiometer shaft (see Fig. 2). If it does not, readjust the linkage for correct reading as discussed in paragraph 2.1.2. CAUTION: Turn the pulley wheel gently in the vicinity of maximum and minimum stage to avoid slamming the potentiometer slider against the end stops and damaging it. Second, loosen the lock nuts on the shafts of the "L" and "H" adjustment potentiometers on top of the indicator chassis and with a screwdriver set them to mid-range. Check the zero point of the indicator dial. If it does not read 00.0 for full counterclockwise rotation of the knob, it should be reset as described in paragraph 5.3.2. Be sure the wire jumper placed across the meter studs for shipping purposes has been removed.

The preferred check points for the range of the gage being installed are given in the following table:

RANGE OF GAGE	STAGES	TRANSMITTER LOW CHECK POINT	INDICATOR LOW CHECK POINT	TRANSMITTER HIGH CHECK POINT	INDICATOR HIGH CHECK POINT
40′	0 to 40′	020	02.0	380	38.0
60′	0 to 60'	020	03.0	380	
80′	0 to 80'	020	04.0	380	76.0

(Note: For gages reading stages lower than 00.0' see paragraph 3.2.3.)

Proceed as follows: (a) set both the transmitter and indicator to their LOW check points. Flip the toggle switch on the indicator to COARSE. Turn the "L" adjustment inside the cabinet until a meter null is reached. Now flip the switch to FINE and readjust "L" for exact null, (b) set both the transmitter and indicator to their HIGH check points. Flip the toggle switch to COARSE and turn the "H" adjustment inside the cabinet until a meter null is reached, after which flip the switch to FINE and readjust "H" for exact null, (c) repeat (a) and (b) alternately until the meter needle shows no movement at all on either LOW or HIGH check point when the toggle switch is snapped into FINE position. Tighten the lock nuts on "H" and "L". Note that in making an initial reading of the gage the toggle switch should always be set to COARSE first, and the gage balanced, then switched to FINE for a more precise balance. Switching to FINE with the dial far out of balance position will cause a violent deflection of the meter which could damage it.

The first part of the calibration has now been completed, and if a bench test of the unit has not been made a check of a number of points over the dial range should be made as described in paragraph 2.1.3. If it has not

been possible to complete the adjustments (a), (b), and (c) above, check the various items listed under section (1) of the trouble shooting chart, paragraph 5.3.3. Check especially for transposed lines, and be sure to take the correct check points for the range of gage being installed. If none of these steps are productive of cure, the units should be brought in for bench testing and checking.

3.2.2. SETTING PULLEY WHEEL TO STAGE: This is the final step of the calibration procedure and is necessary because the beaded float cable can only be positioned in increments of 3 inches, Loosen the two hex-socket set screws which bind the pulley wheel hub to its shaft, An Allen wrench (5/64"-long) to fit these screws is furnished with the transmitter, It should then be possible for the pulley wheel to be turned independently of the potentiometer and V-R counter. Put the float cable over the pulley wheel and allow it to come to equilibrium being sure the cable beads are locked into the drive holes in the pulley circumference. Next set the potentiometer and V-R counter to the exact stage as noted on the staff gage or the GS tape gage. Remember that the V-R reading must 'be multiplied by a factor of 1.5 on 6O-ft. gages and by 2.0 on 80-ft. gages, Tighten the set screws in the pulley wheel hub. Calibration is then complete and it should be possible to read the correct river stage on the dial of the remote indicator unit.

3.2.3. SPECIAL STAGE SETTINGS: The instructions in this manual thus far have assumed that the gage will be used to read stages beginning at 00.0 ft. and that water levels lower than this will not occur. This is the usual case; occasionally, however, gages are installed where water levels several feet below zero stage sometimes occur and where it is desired to have the gage cover the range say, of from -6 ft. to +34 ft. instead of 0 to +40 ft. In such a case the V-R counter linkage of the transmitter would be set to give readings between 940 and 340 and the indicator dial adjusted to read beginning from 94.0 at minimum position, If a 60-ft. gage were used in this example, the transmitter V-R counter would be set to read from 960 to 360: for an 80-ft gage, from 970 to 370. Note that negative numbers are given on the V-R counter as the value obtained by combining the negative number with loo, thus -6.0 = -6.0 + 100.0 = 94.0. The various check points given in paragraph 3.2.1. would be scaled downward to reflect the shift of range. Remember that a multiplying factor of 1.5 applies to the V-R counter readings (including negative numbers) on 60-ft. gages and a factor of 2.0 applies to readings on 80-ft. gages. The table of check points given in paragraph 3.2.1. would then be as follows for gages having a minimum reading of -6 feet instead of zero:

RANGE OF GAGE	STAGES	TRANSMITTER MINIMUM SETTING	TRANSMITTER LOW CHECK POINT	INDICATOR LOW CHECK POINT	TRANSMITTER HIGH CHECK POINT	INDICATOR HIGH CHK. POINT
40'	-6 to 34'	940	960	96.O	320	32.0
60'	-6 to 54'	960	980	97.O	340	51.0
80'	-6 to 74'	970	990	98.O	350	70.0

(Indicator dial minimum setting in each cask is 94.0)

This table, as well as the one in paragraph 3.2.1. was prepared from the following formulas which can be used to prepare similar tables for other stage ranges such as -4 feet to +56 feet using a 60-ft. gage. In these formulas negative numbers are used as such, although they are read on the counter and dial as the complement of 100, as previously explained:

$$\text{Transmitter Minimum Setting} = \frac{\text{Lowest Stage}}{\text{Multiplying Factor}}$$

$$\text{Transmitter Maximum Setting} = \frac{\text{Lowest Stage + Range of Gage}}{\text{Multiplying Factor}}$$

Indicator Dial Minimum Setting = Lowest Stage

Indicator Dial Maximum Setting = Lowest Stage + Range of Gage

Transmitter Low Check Point = Transmitter Minimum Setting +2

Indicator Low Check Point = Transmitter Low Check Point X Multiplying Factor

$$\text{Transmitter High Check Point} = \frac{\text{Lowest Stage + Range of Gage}}{\text{Multiplying Factor}} - 2$$

Indicator High Check Point = Transmitter High Check Point X Multiplying Factor

Indicator Dial Reading = V-R Reading X Multiplying Factor

3.2.4. TRANSMITTER DECALS: Since the V-R counter on the transmitter reads potentiometer turns rather than feet of stage, some confusion could possibly result from inexperienced persons attempting to interpret this reading as true feet of stage in all cases. To guard against this possibility there are available through Area Hydrologic Engineer's Offices some 1" x 2" metal foil decals reading, "Property USWB. Note: To convert V-R counter Reading to Stage in Feet Multiply by 1.5", and "Property USWB. Note: To Convert V-R Counter Reading to Stage in Feet Multiply by 2.0". The first of these is intended to be affixed to the potentiometer of 60 ft. gages in such a position that it can be easily seen when viewing the V-R counter. The second is for similar application on 80 ft gages. Of course on a 40-ft gage such a decal is not needed since the V-R counter reading would correspond to the stage in feet. The decals are easily affixed by peeling off a paper backing and pressing the metal foil in place.

SECTION 4 - OPERATION

4.1. INDICATOR UNIT

4.1.1. READING THE STAGE: To read the river stage proceed as follows:

a) Hold the toggle switch in the COARSE position and adjust the dial knob until the meter reads zero.

b) Flip the switch to FINE position and readjust knob as necessary to move the meter needle back to zero.

c) Flip the switch into FINE position again, noting whether meter needle moves. If it does, readjust knob slightly as necessary, so that flipping of the switch into FINE position will not cause meter needle to move.

d) The stage will then be indicated on the dial. Note that this reads to tenths of a foot.

CAUTION: In reading the gage always make initial adjustment with switch in COARSE position then switch to FINE for a more precise setting; flipping to FINE with dial far off balance will cause a violent deflection of the meter which may damage it.

SECTION 5 - MAINTENANCE

5.1. GENERAL

5.1.1. ROUTINE CHECKING: The readings obtained from the gage should be compared periodically with those of the tape gage inside the gage house, or with the outside staff gage to detect any possible mis-functioning. Occasionally the float cable beads get out of alignment with the drive holes in the pulley wheel, or may conceivably slip a bead spacing. This is apt to occur if the river falls for any reason below minimum stage. Line changes, or any tampering with the "H" and "L" calibration adjustment, or dial coupling of the indicator, or with the pulley wheel-potentiometer linkage of the transmitter, will necessitate recalibrating the instrument.

5.2. TRANSMITTER

5.2.1. CLEANING: The transmitter and the inside of its aluminum housing should be kept free of dirt and foreign matter as precaution against contaminating the shaft bearings or the potentiometer. The precision bearings supporting the pulley shaft are of stainless steel and have lifetime lubrication, with sealed construction. If, somehow, they should become fouled with dirt, it is advisable to exchange the transmitter as the bearings are pressed into the casting and their replacement in the field is a difficult job. The condition of the bearings can be determined by disconnecting the potentiometer arm linkage and giving the pulley wheel a light "spin" with one hand. With only the V-R counter coupled to the pulley it should turn freely several dozen times or more; being greater, of course, for a large diameter pulley, and conversely. Actual starting torque required for a new transmitter with potentiometer coupled and with a 24-inch pulley wheel, is between 2.5 and 3.5 in.-oz. It is somewhat less than this for units with 18-inch and l2-inch pulleys.

5.2.2. PULLEY, HUB, AND SHAFT REPLACEMENT: The three sizes of pulley wheels are interchangeable on the same wheel hub. To interchange a pulley wheel simply remove the four 8-32 binder head screws from the pulley face, slip off the old pulley and replace it with the new one. The four screws should then be tightened in firmly and evenly so as to hold the new pulley wheel snugly against the collar of the hub.

To remove the hub it is only necessary to loosen the two set screws in the hub with a 5/64″ Allen wrench, and slide the hub off the shaft. Should the hub stick, do not bang on the pulley or shaft, or try to pry the hub laterally. To do so may may the bearings. Instead, hold the shaft end of the potentiometer coupling linkage with a pliers or other tool and try to turn the pulley and hub off with an outward turning motion. Before replacing a hub on a shaft be sure to polish off any burrs that may have been raised on the shaft by set screws. If the shaft should need to be removed from the support stand it is best done by first removing the coupling linkage arm and the V-R counter drive gear. Then polish off any burring at the end of the shaft caused by the gear set screw, and slide the shaft outward, away from the potentiometer.

5.3. INDICATOR

5.3.1. BATTERIES: The bridge circuit battery should not need replacement oftener than about once a year. It should be checked periodically and particularly before the onset of cold weather or of the spring flood season. If the battery shows a terminal voltage of less than 6.0 volts it should be replaced. In addition, batteries should be replaced at least once a year regardless of condition.

5.3.2. POTENTIOMETER AND DIAL: To reset the dial to zero or to a lower minimum stage as may sometimes be necessary, remove the dial mechanism and set the potentiometer fully counterclockwise. Then set the dial mechanism to the stage number of the desired minimum stage and carefully replace and secure it.

To remove the dial mechanism, first remove the three small screws in the periphery of the dial frame. Next loosen the two socket head set screws in the barrel or "knob" of the dial by means of a l/16" Allen wrench. The main part of the dial mechanism should now lift off of its mounting base. The dial mounting base is secured to the panel by means of the l/2" hex mounting nut of the potentiometer. To replace the dial simply proceed in reverse order. If the dial mounting plate has been removed be sure that the collar on its underside seats properly in the hole surrounding the potentiometer shaft, and that the potentiometer locating pin is properly engaged in the panel hole provided for it.

Sluggish dial action is sometimes caused by a slight misalignment of the potentiometer shaft with the dial mechanism and can often be corrected by removing the dial mechanism and loosening the potentiometer locking nut which

also secures the dial mounting plate to the panel. The potentiometer-dial alignment can then be shifted slightly so that the dial does not bind but turns easily. Next, tighten the locking nut being sure that the potentiometer locating pin and the dial and mounting plate collar are properly engaged in the panel holes provided for them. Do not try to bend or force any part of the mechanism in attempting to improve dial action. Sluggish dials or dials which do not function properly and cannot be cured by the above measures should be 'replaced.

5.3.3. TROUBLE SHOOTING - BRIDGE CIRCUIT: Some of the troubles that may develop and their possible causes are listed below:

1. UNABLE TO CALIBRATE GAGE BUT METER DEFLECTS:

   Type and range of indicator unit not matched to transmitter unit. See Table, paragraph 1.2.1. Especially check RC.

   Lines between transmitter and indicator open, shorted, transposed or have leakage between wires. See paragraph 2.1.1.

   Wrong calibration points being used. See paragraphs 3.2.1,and 3.2.3

   Wiring of RX to terminal block transposed, see Fig. 2.

   Open or faulty potentiometer RX, RY, RA, or RB.

   Excessive line resistance. See tables, paragraph 2.1.1.

   Faulty dial or V-R counter. Check visually, turning through full range.

   Neon lamps E in indicator circuit damaged.

2. NO METER DEFLECTION FOR ANY SETTING OF DIAL:

   Line "C" open.

   Wire shunt placed across meter studs for shipping purposes still in place.

   Dead battery.

   Defective meter or defective sliders on potentiometers RX, RY, RA or RB.

   Switch S1 or resistor R1 faulty.

3. CIRCUIT CALIBRATES, BUT WILL NOT HOLD CALIBRATION FOR ANY PERIOD OF TIME:

Faulty lines with excessive leakage between wires or to ground. See paragraph 2.1.1.

Fouled insulation at transmitter terminal block or elsewhere, or neon lamp E in indicator damaged.

4. CIRCUIT CALIBRATES, BUT READINGS DEVIATE MORE THAN 0.1 FT. FROM LINEAR CHANGE OVER PART OF DIAL:

Faulty potentiometers RX or RY. Give gage bench test as described in paragraph 2.1.3.

See also under (3) above.

5. METER ACTION INTERMITTENT AND ERRATIC:

Loose connection in lines or battery leads or intermittent short in wiring.

Defective potentiometer slider in RX, RY, RA, or RB.

Defective meter M, switch S1 or resistor R1.

6. METER SLUGGISH, DIAL CANNOT BE SET ACCURATELY TO NEAREST TENTH FOOT:

Weak batteries.

Poor connection in line or battery leads.

Defective meter M, switch S1, or resistor R1.

SECTION 6 - PARTS LIST

6.1 TRANSMITTER

6.1.1. PULLEY WHEEL ASSEMBLY:

1 Support, pulley wheel	Item 10, Fig. 11
1 Shaft, pulley wheel	Item 1, Fig. 9
1 Arm, drive, shaft	Items 2 & 4, Figs. 9 & 10
1 Arm, drive, potentiometer	Item 5, Fig. 10
1 Hub, pulley	Item 11, Fig. 10
2 Bearings, N. H. SFR188PPEE	Item 13, Fig. 9
1 Wheel, pulley	Items 7, 8, or 9, Fig. 10
1 Counter, Veeder-Root Al14133	Item 12, Fig. 9
1 Counter plate	Item 3, Fig. 9
1 Collar	Item 6, Fig. 10
2 Gear, Dynamic 204-96	Item 14, Fig. 9
1 Block, terminal, Cinch-Jones 3-141	
1 Potentiometer, Helipot ER25K(1)L.1	

6.1.2. ACCESSORIES:

1 Wrench, hex, long, 5/64″
1 Clip, spring, H. H. Smith No. 534
1 Housing per Fig. 8
1 Float, 4 in., Fig. 5
2 Hooks, float, cable end, D530-13
1 Counterweight, 20 oz., D530-8
Cable, S. S., .040" dia., beaded every 3 inches

6.2. INDICATORS

6.2.1. TYPE E GAGES (REFER ALSO TO FIGS. 4 AND 6):

1 Cabinet, Special
1 Chassis, special
1 Microammeter, Simpson 27, scale 25/0/25 (M)
2 Potentiometer, 500 ohm, IRC WPRL-500 (RA, RB)
1 Terminal block, Cinch-Jones 5-141-Y
1 Switch, JAN type ST52S (S1)
1 Lamp, neon, NE2 (E)
1 Resistor, l/2 watt l0%, .22M-ohm (R1)
1 Resistor, wire wound 1%, per Table, Fig. 6 (RC)
1 Potentiometer, Helipot AR5KL.05 (RY)
1 Dial, Borg 1310 Microdial
1 Battery, Burgess F4BP (BT1)

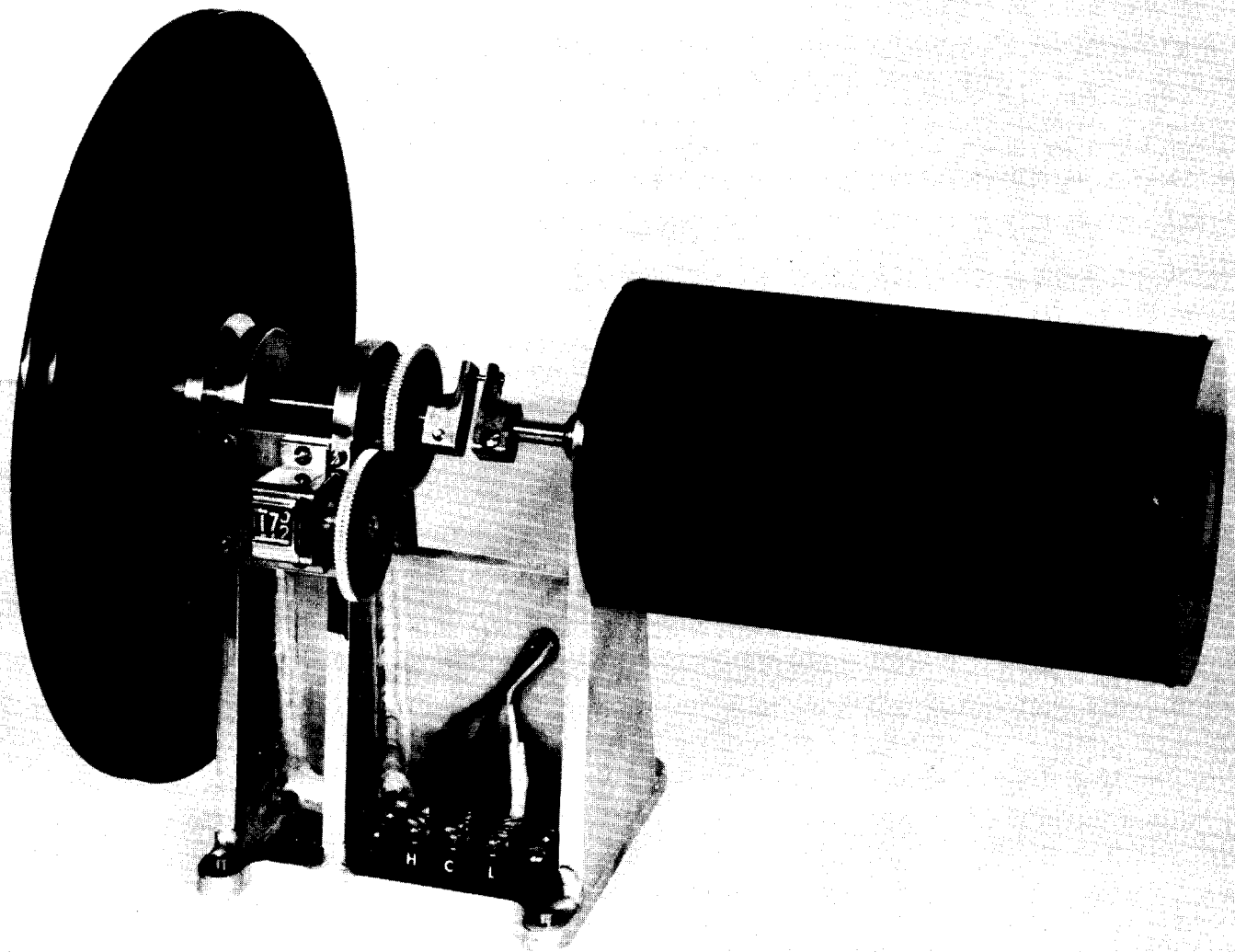

FIG. 3

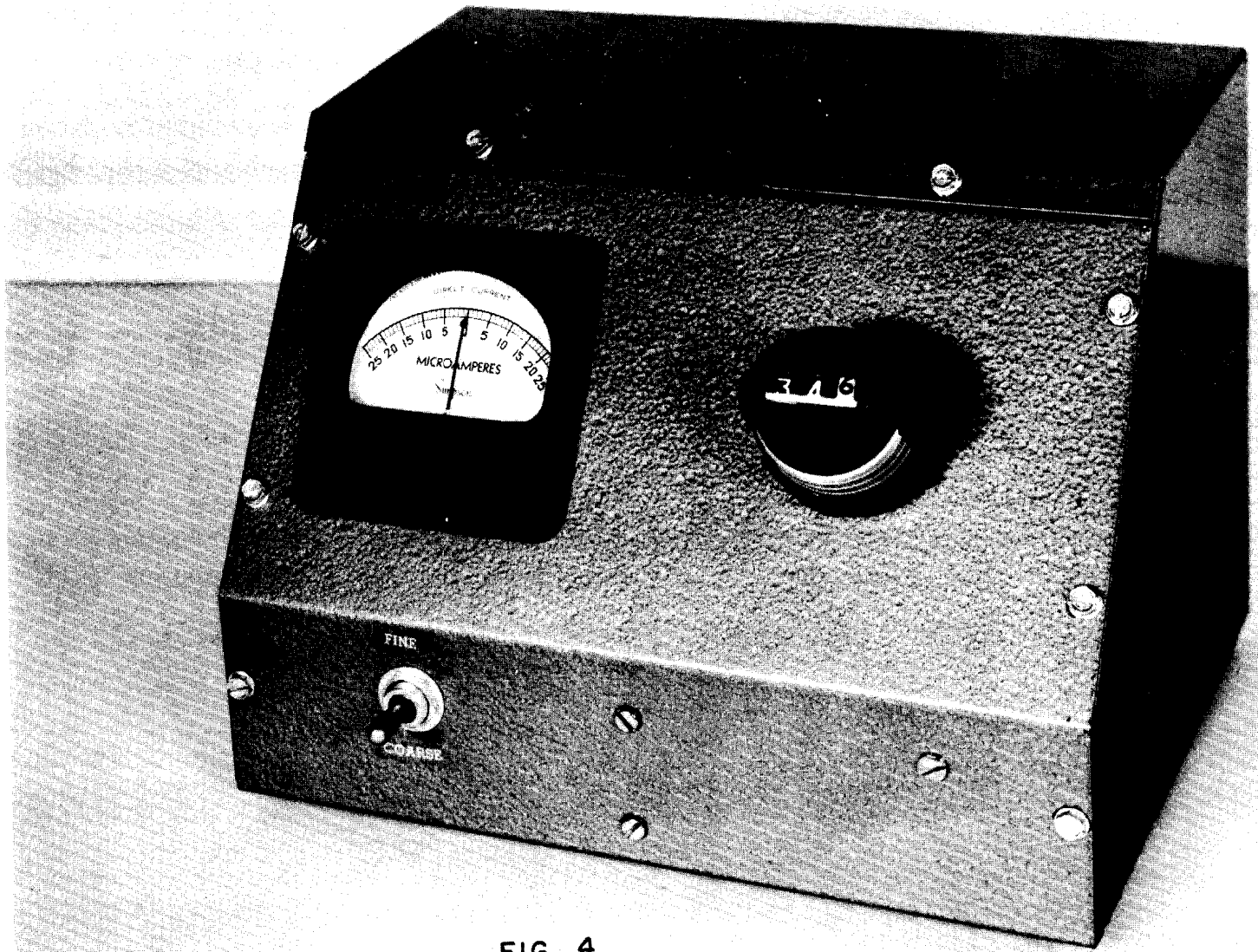

FIG. 4

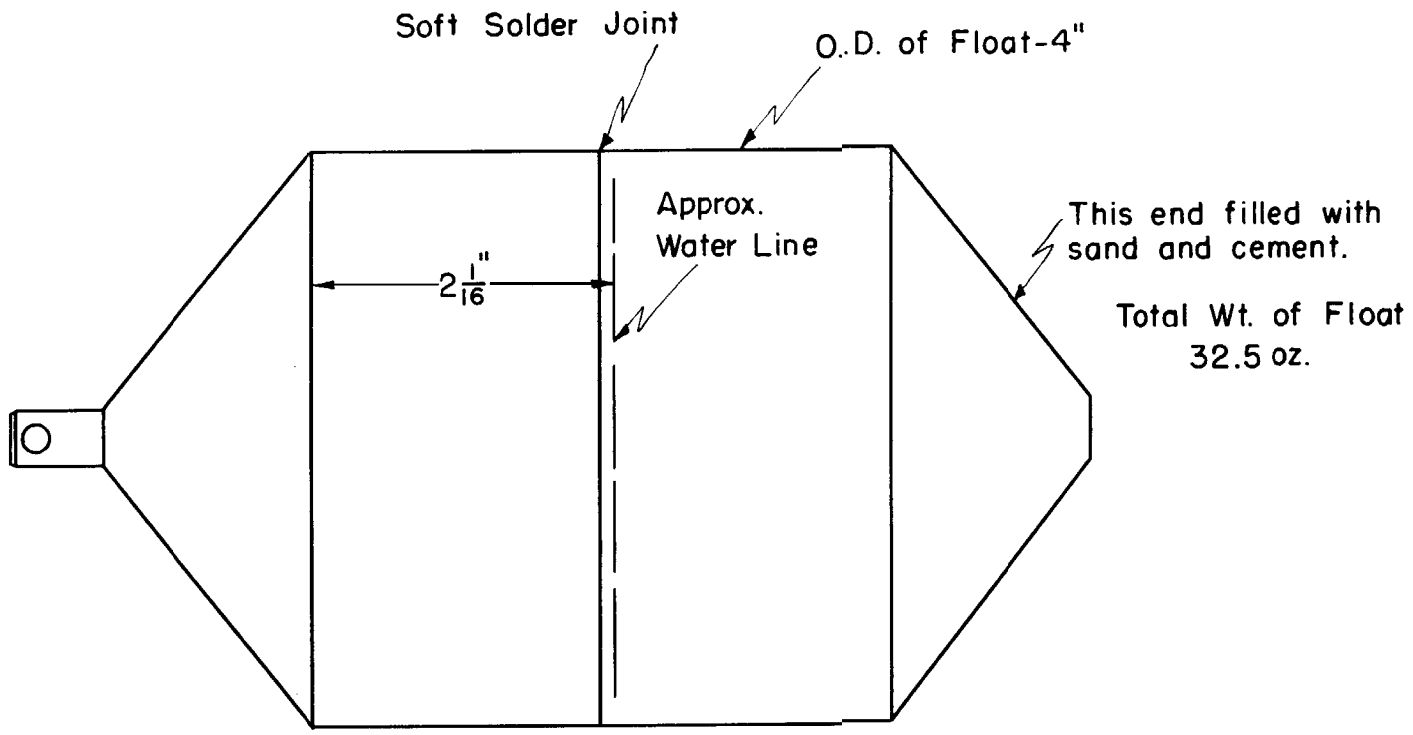
Soft Solder Joint
O.D. of Float-4"
Approx.
Water Line
$2\frac{1}{16}$"
This end filled with
sand and cement.
Total Wt. of Float
32.5 oz.

FIG.5

FLOAT

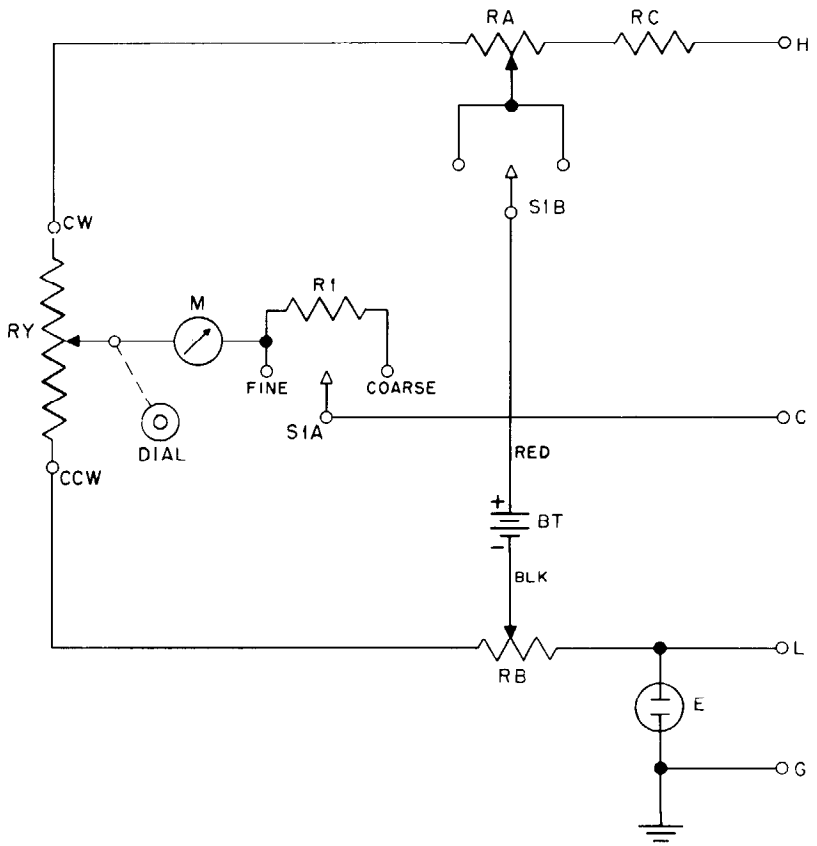

STAGE	RC
40 FT	37.5 KΩ
60 FT	16.67 KΩ
80 FT	6.25 KΩ

PARTS LIST

BT - BURGESS F4BP 6.0 VOLT
E - NE2 NEON LAMP
M - SIMPSON NO. 27 25/0/25 MICROAMMETER
RA - IRC WPRL 500, WIREWOUND 500Ω
RB - IRC WPRL 500, WIREWOUND 500Ω
RC - IRC WW4J, 1% PER TABLE
RY - HELIPOT AR5KL.05
R1 - 220 KΩ ½W. 10%
S1 - DPDT MOMENTARY SW. TYPE ST52S
DIAL - BORG 1310 MICRODIAL
TERMINALS - CINCH JONES 4-141-Y
CABINET - BUD C1585HG
CHASSIS - BUD AC431

Fig. 6

U.S. DEPT OF COMMERCE WASHINGTON 25,D.C.
WEATHER BUREAU
INSTRUMENTAL ENGINEERING DIVISION

RESISTANCE RIVER GAGE
TYPE E
INDICATOR UNIT
WIRING DIAGRAM

APPROVED BY
DRAWN BY W.V.Compton
SCALE

DRAWING NO. 450-4221/P
DATE 9-13-61

STAGE	PULLEY CIRCUMF.
40 FT.	12 IN.
60 FT.	18 IN.
80 FT.	24 IN.

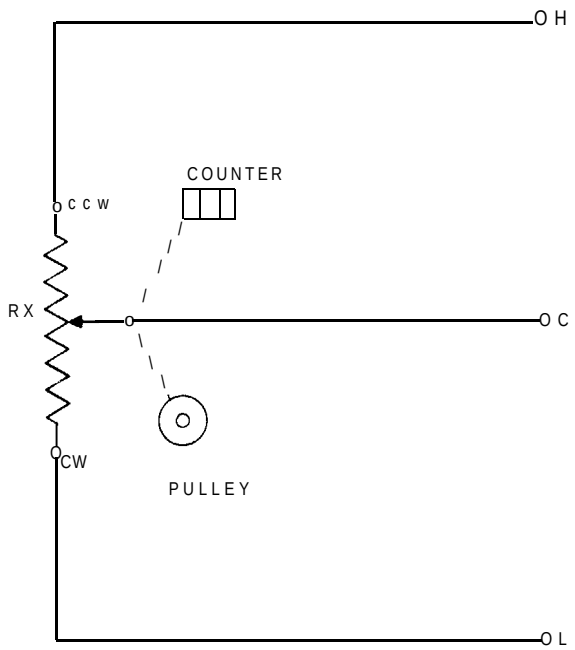

PARTS LIST

RX - HELIPOT ER25K (I) L.I

TERMINALS - CINCH JONES 3-141

COUNTER - VEEDER ROOT A114133

Fig. 7

U.S. DEPT. OF COMMERCE WASHINGTON 25, D. C

WEATHER BUREAU

INSTRUMENTAL ENGINEERING DIVISION

RESISTANCE RIVER GAGE
TYPE E
TRANSMITTER UNIT
WIRING DIAGRAM

APPROVED BY

DRAWN BY W.C.Compton

SCALE

DRAWING NO. 450.4221/N

DATE 9-13-61

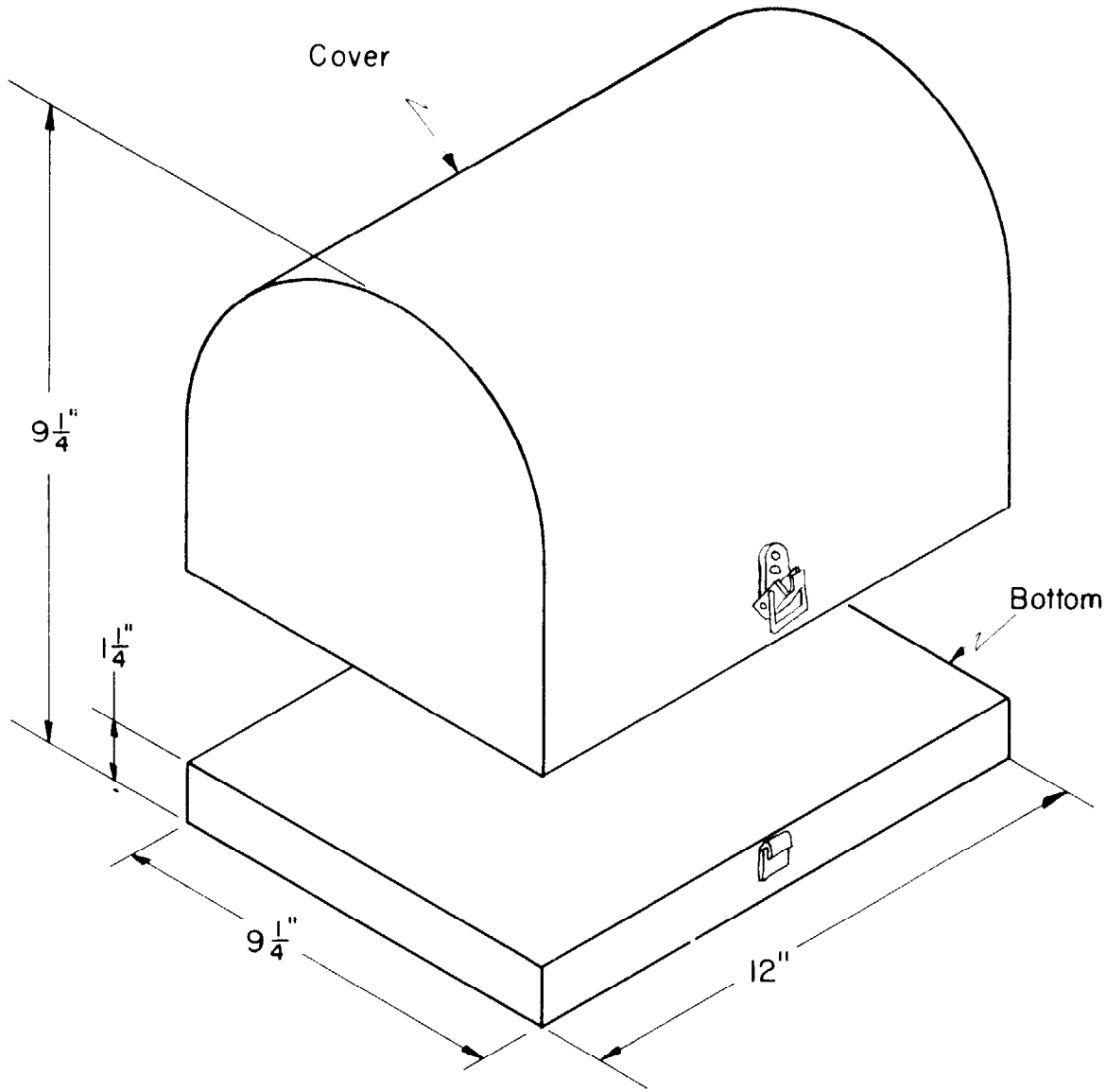

FIG. 8
HOUSING.

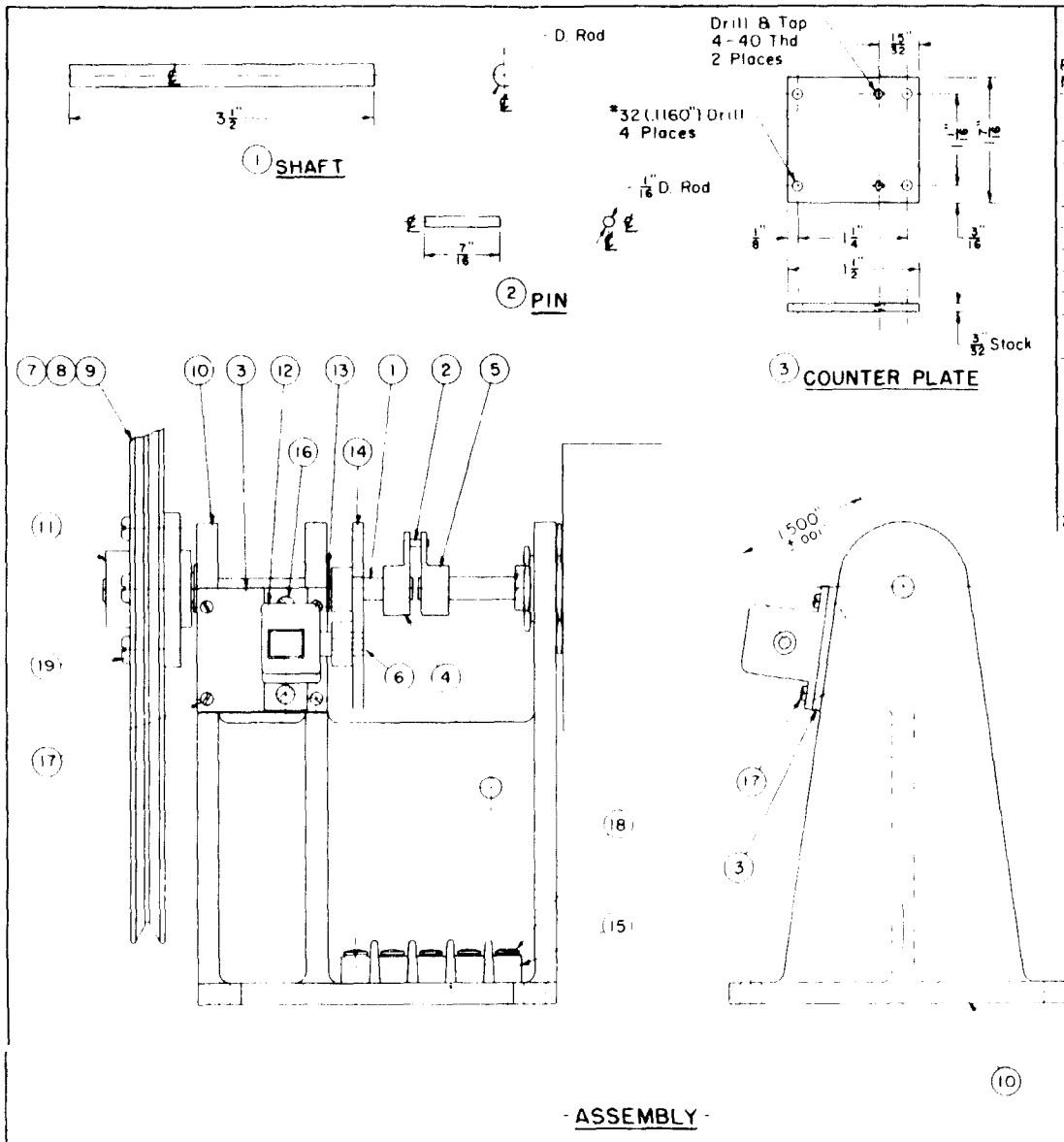

BILL OF MATERIAL

Pt. No.	Qty	Description	Material	Spec.	Remarks
1	1	Shaft	Stain Steel		
2	1	Pin	Stain Steel		
3	1	Counter Plate	Aluminum	6061-T6	
4	1	Shaft Arm			See Note 1
5	1	Potentimeter Arm			See Note 1
6	1	Collar			
7	1	Pulley		6061-T6	
8	1	Pulley			
9	1	Pulley			
10	1	Support			See Sheet 3
11	1	Hub		2024-T4	
12	1	Counter, Direct Drive			Veeder-Root A114133
13	2	Bearing, .2500" Bore	Stain. Steel		New Hamshire SFR188PPEE
14	2	Gear, 96 Teeth, 1/4" Bore	Aluminum		Dynamic 204-96
15	1	Terminal Strip			Cinch-Jones 3-141
16	2	4-40 Bind. H.M.S. - 3/16" Lg.	Stain. Steel		
17	4	4-40 Fil. H.M.S. - 3/16" Lg.			
18	4	6-32 Bind. H.M.S. - 3/8" Lg.			
19	4	8-32 Pan H.M.S. - 1/2" Lg.			
20					

NOTES:
1 - May Be Fabricated From Veeder Root Counter Levers
2 - Parts 3,6,7,8,9,11 Shall Be Black Anodized.

U.S. DEPT. OF COMMERCE — WASHINGTON 25, D.C.
WEATHER BUREAU
INSTRUMENTAL ENGINEERING DIVISION

RESISTANCE BRIDGE RIVER GAGE
MODEL E

APPROVED BY
DRAWN BY W. V. Compton
SCALE
DRAWING NO. 450.4221/K
DATE 9-25-

SHEET 1 OF 3

Fig. 9

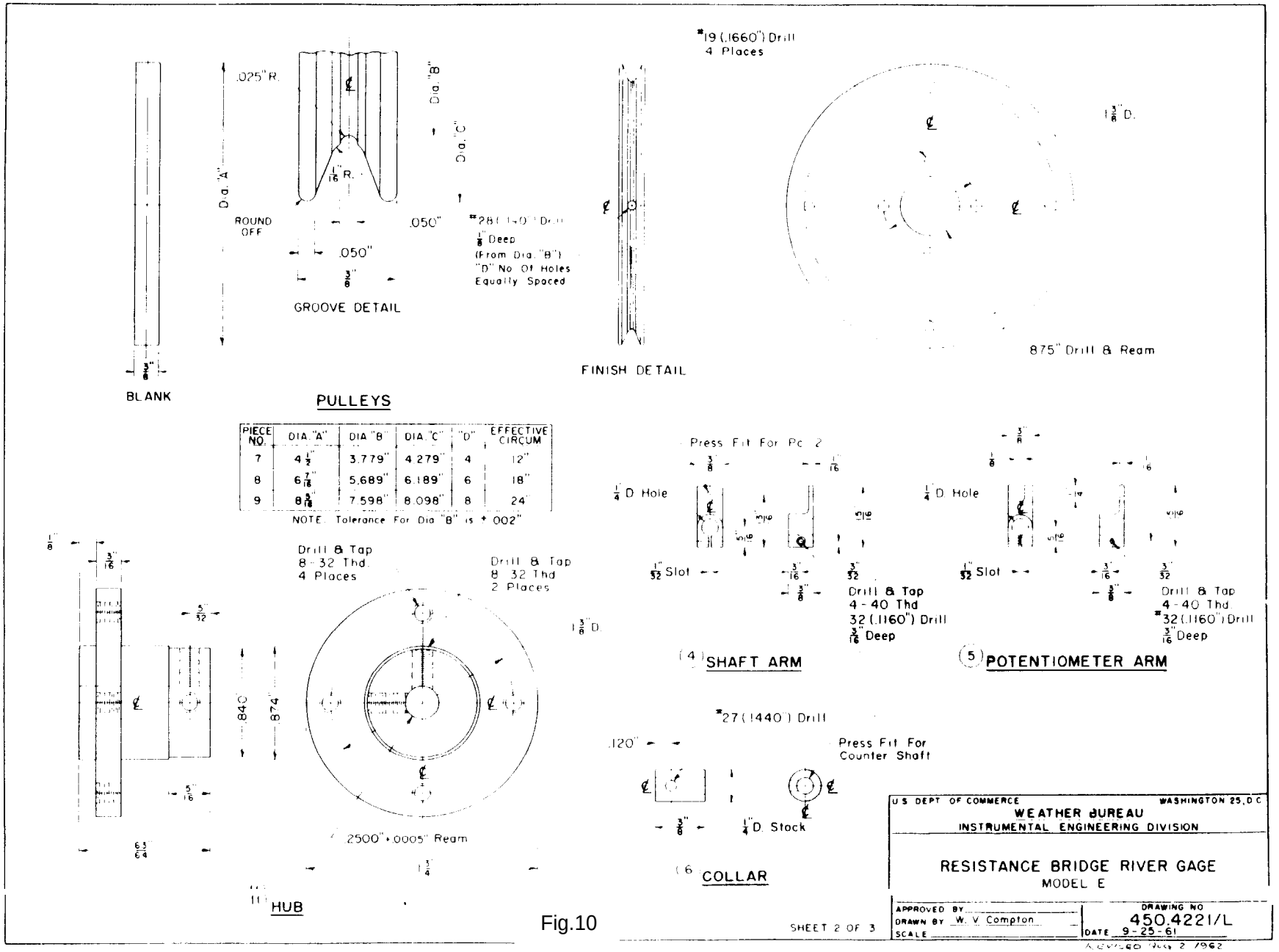

PIECE NO.	DIA. "A"	DIA. "B"	DIA. "C"	"D"	EFFECTIVE CIRCUM.
7	4 1/2"	3.779"	4.279"	4	12"
8	6 7/16"	5.689"	6.189"	6	18"
9	8 3/16"	7.598"	8.098"	8	24"

Fig.10

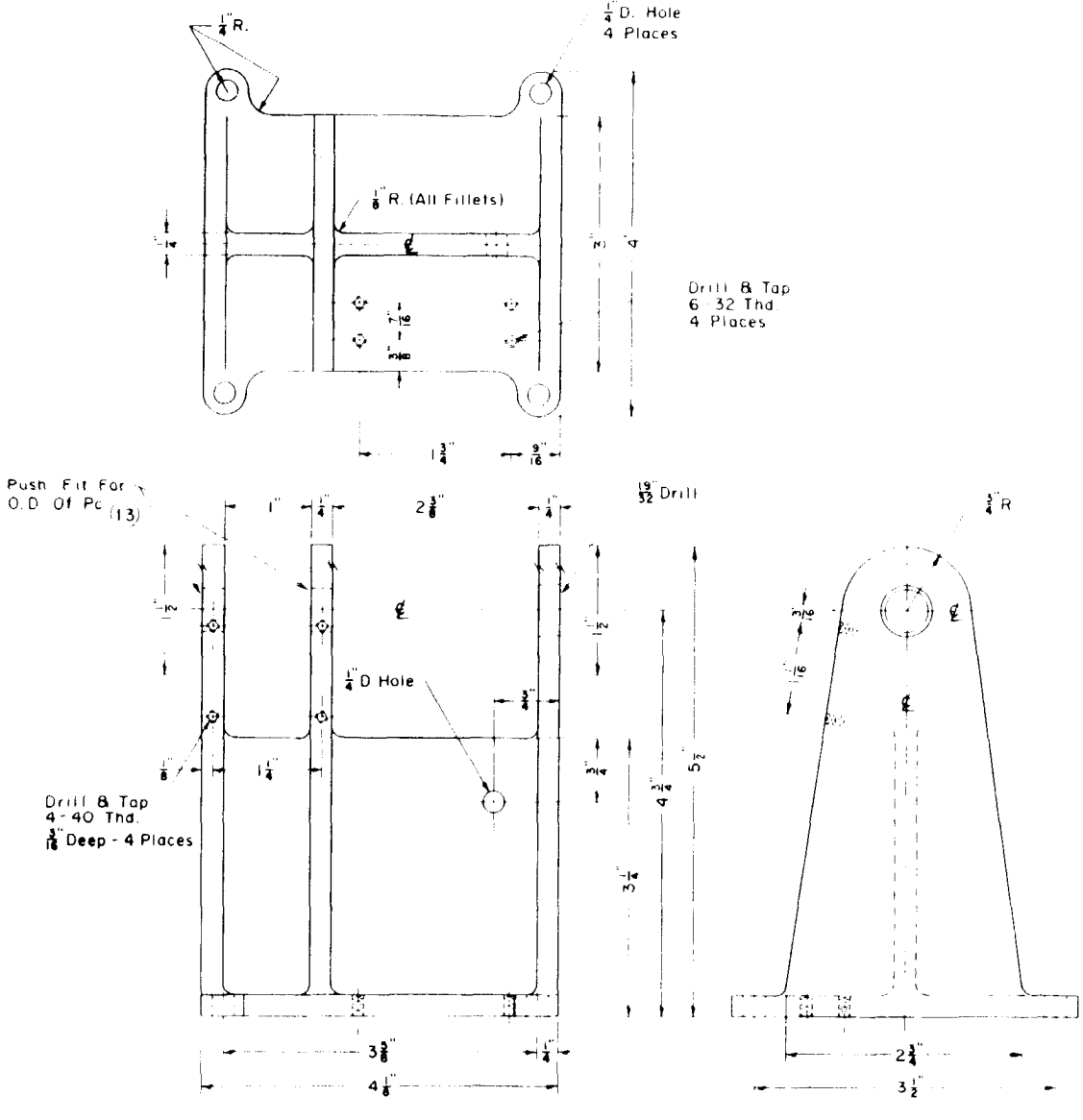

(10) SUPPORT

Matl Cast Aluminum In Accordance With Federal Spec. QQ A 601, Alloy 356-T6, Class 3M

U.S. DEPT. OF COMMERCE — WASHINGTON 25, D.C.

WEATHER BUREAU

INSTRUMENTAL ENGINEERING DIVISION

RESISTANCE BRIDGE RIVER GAGE

MODEL E

APPROVED BY

DRAWN BY W. V. Compton

SCALE

DRAWING NO 450.4221/M

DATE 9-25-61

SHEET 3 OF 3

Fig 11

Instruction Bulletin 35-1542-4
Revision 3

INSTRUCTION BULLETIN

for

MODEL 1542

PUNCHED TAPE LEVEL RECORDER

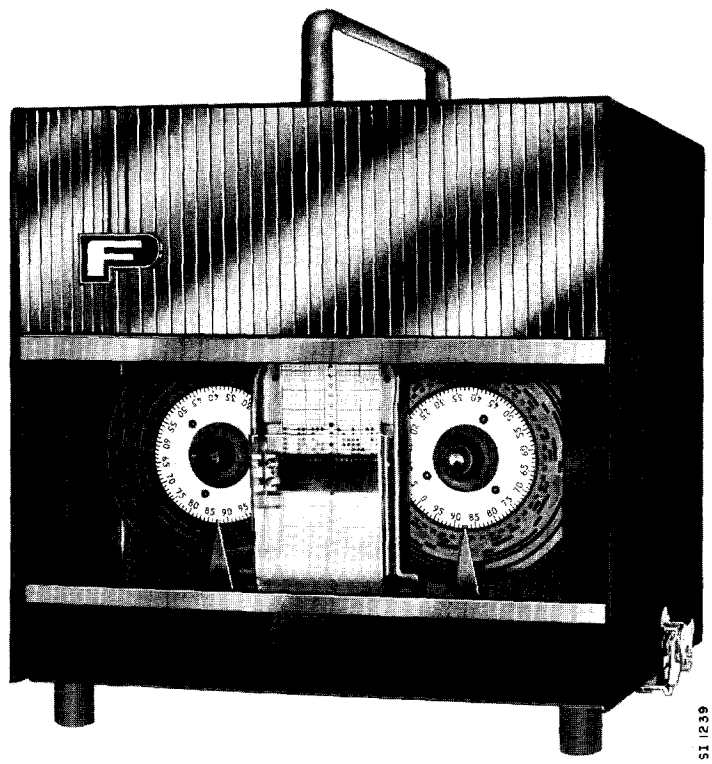

FISCHER & PORTER CO.
WARMINSTER, PENNSYLVANIA, U.S.A.

MODEL 1542 PUNCHED TAPE LEVEL RECORDER

INTRODUCTION

This Bulletin contains information concerning the primary actuating unit that permits liquid level analog measurements to be digitally converted and recorded on punched paper tape utilizing the Fischer & Porter Series 1540 Punched Tape Recorder as the recording instrument. Refer to Instruction Bulletin 35-1540-l for complete information concerning the Punched Tape Recorder.

DESCRIPTION

The Model 1542 Level Recorder employs mechanical means to convert angular positions of a rotating shaft into a coded digital output, and read out this digital value on punched tape at selected intervals. This instrument has been specifically designed to measure liquid level by means of a cable, drum and float assembly. This measurement source may be geared to the instrument to obtain any convenient ratio between rotation of the recorder input shaft and rotation of the primary actuating unit shaft. For example, when used with a liquid level transducing system having a 1.0 foot circumference float wheel on the input shaft, each revolution of the input shaft will represent 1.00 foot change in liquid level; i.e., the low-order code disk will represent the hundredths and tenths digits, and the high-order code disk will represent the units and tens digits. The instrument may include a pushbutton mounted on the front plate that serves to initiate a punch out upon demand, primarily for test purposes.

INSTALLATION - OPERATION

A. Primary Actuating Unit

The Model 1542 Level Recorder is furnished with a hub, pulley, washer, flange, and thumb screws mounted to the input shaft of the basic Punched Tape Recorder.

Mount the hub to the projecting shaft directly over the flatted portion; tighten the #10-32 set screw in the hub.

Place the pulley on the shaft butting up against the hub; place the flat l/2″ ID washer against the pulley.

Thread the flange on the shaft, and thread the two thumb screws thru the flange; do not tighten the thumb screws at this time.

Place the customer furnished cable and float assembly over the pulley and note the exact depth to which the float is positioned in the tank, well, etc.

Rotate the code disk shaft while holding the pulley in a fixed position, until the code disk indicates the depth of the float in the appropriate measurement units.

Tighten the thumb screws; the Level Recorder is aligned with the measuring medium.

B. Timer Unit Connections

The Level Recorder may be furnished with or without a Timer Unit. If the F&P Timer is included, no further wiring is necessary. If the F&P Timer Unit is not included, the customer must wire his external timer in accordance with the Wiring Diagram. However, if the instrument has been supplied with the F&P Timer Unit and it is desired to use an external timer, the F&P Timer must be disconnected in the following manner.

1) Remove all five wire leads from the F&P Timer Unit that are connected to the top of TB2; that is -

the two red leads from terminal 1,
the blue lead from terminal 2,
the yellow lead from terminal 4 and
the white lead from terminal 5.

2) Now connect the red wire lead from the input receptacle to terminal 2 (instead of terminal 1) of TB2. Do not remove the blue wire lead already on terminal 2.

C. Manual Punch Out

Provisions for a manually initiated punch out have been furnished by the inclusion of a pushbutton switch mounted on the front plate of the instrument. Actuation of the switch applies energizing power to the punch motor to initiate a punch out. Use of this switch should be limited to test and alignment purposes inasmuch as each off schedule manual punch out operation will de-synchronize the pre-printed time increments of the data recording tape with actual time of day.

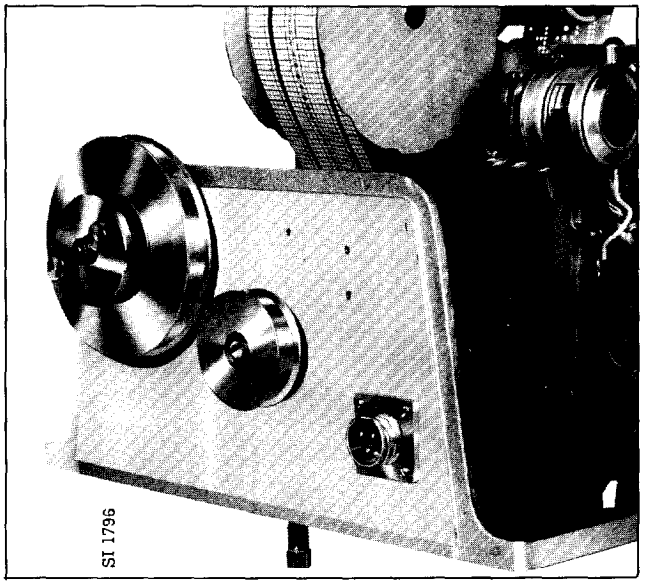

FIGURE I REAR VIEW, LEVEL RECORDER

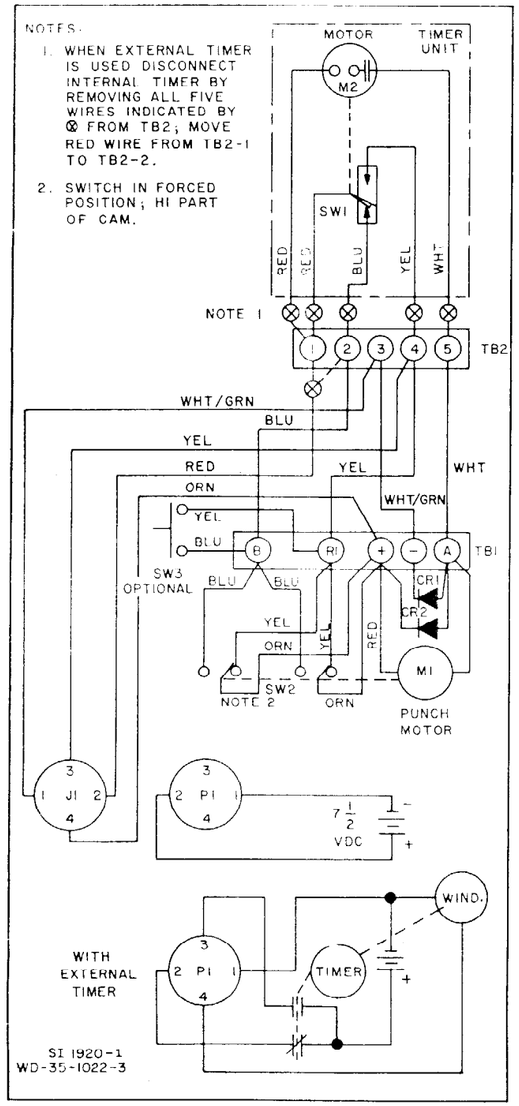

FIGURE II WIRING DIAGRAM

D. Changing Timer Unit Location

The Timer Unit has been designed so that its position may be relocated from the right hand side to the left hand side of the chassis (and vice versa) without affecting operation of the Recorder. The changeover from right to left is performed in the following manner. The right and left sides are designated when looking at the front of the instrument.

1) Unlatch and remove the cover from the chassis.

2) Remove the 3 binding head screws that mount the Timer Unit to the base.

3) Remove the screw that anchors the cable clamp to the right rear wall of the base.

4) Remove the screw that anchors the cable clamp to the left side of the base.

5) Swing the Timer Unit around from the right to the left side of the instrument and place it in a position diametrically opposite to its original position. Note that the longer mounting screw (with cable clamp) remains in the same position.

6) Replace the 3 binding head screws and tighten the Timer Unit to the base.

7) The cable clamp previously anchored to the right rear wall is now anchored to the left rear wall holding the same wiring harness in position.

8) The cable clamp previously anchored to the left side of the base remains in the same position except it should be anchored using the Timer Unit mounting screw.

SPECIAL FEATURES

When a Model 1542 Punched Tape Recorder is used in conjunction with a Series 50DB1014 Binary-Decimal Transmitter, additional wiring is effected so that the value punched out on the recording tape may be transferred to the Binary-Decimal Transmitter for telemetering to a remote area.

A contact board assembly mounted between the punch arm assembly and the code disks associates each punch with an electrical contact that closes for each hole punched in the tape. The electrical output from the contacts is brought out to a terminal board designated TB4 and TB5, each terminal being appropriately referenced for proper connection to the Transmitter. Refer to Figure IV.

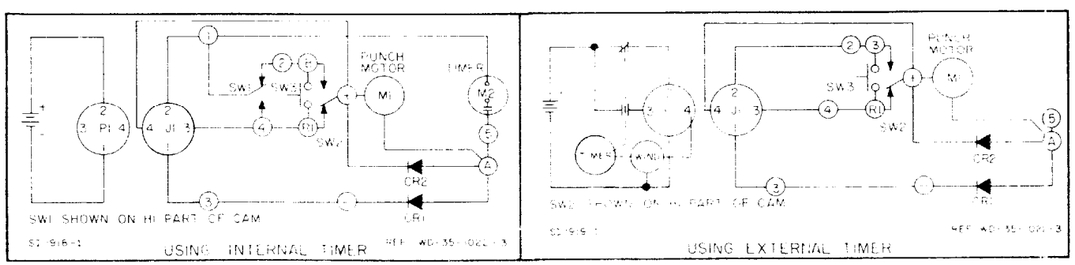

FIGURE III SCHEMATIC DIAGRAM

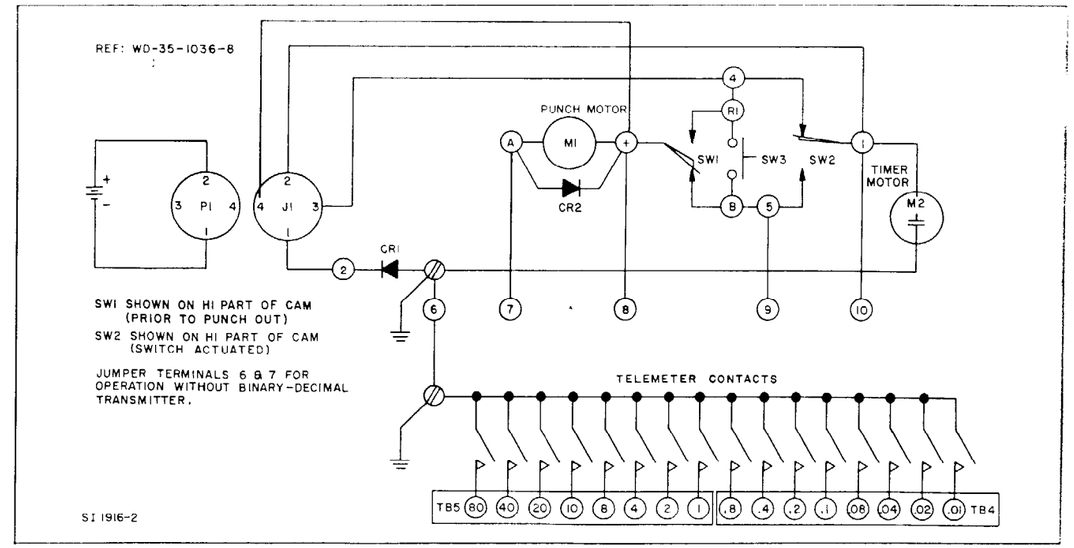

FIGURE IV WIRING SCHEMATIC, TELEMETERING RECORDER USING INTERNAL TIMER

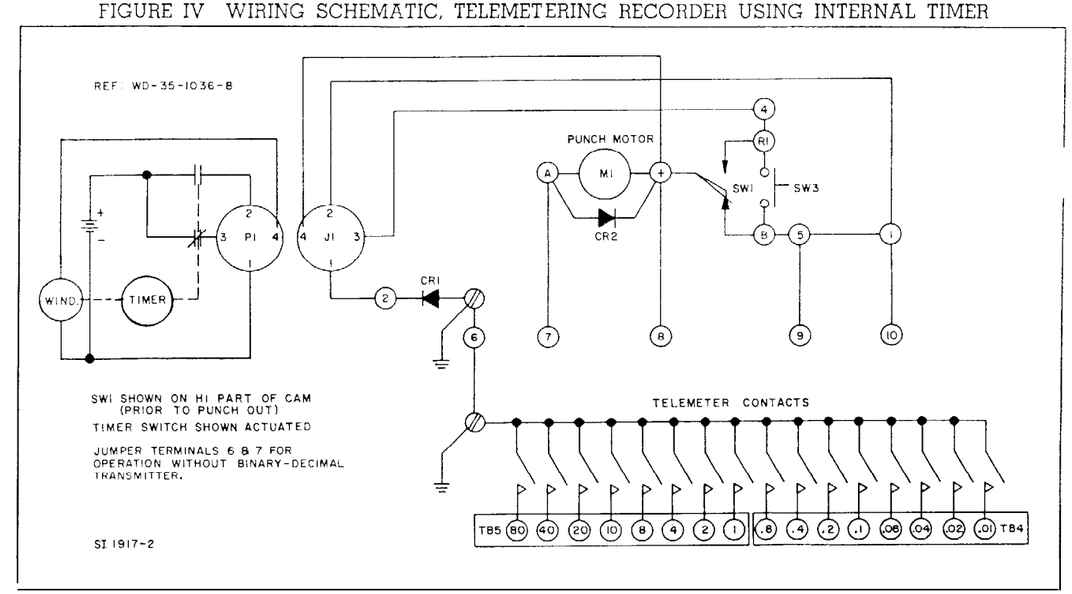

FIGURE V WIRING SCHEMATIC, TELEMETERING RECORDER USING EXTERNAL TIMER

In the event the user may wish to replace the internal timer and battery of the Punched Tape Recorder with an external timer of his own choosing, the F&P Timer **must** be disconnected in the following manner.

1) Remove **all** five wire leads from the F&P Timer Unit that are connected to terminal board, TB2; that is —

the white timer motor lead from the mounting screw,
the red timer motor lead from terminal 1,
the red timer switch lead from terminal 1,
the yellow timer switch lead from terminal 4 and
the blue timer switch lead from terminal 5.

2) Remove the complete Timer Assembly.

3) Remove the external battery harness from the Recorder and fabricate a new battery-timer harness as shown in Figure V.

4) Connect the new harness to the input receptacle P1, as shown.

5) Connect a jumper wire from terminal 1 to terminal 5, of terminal board, TB2. Tighten all terminal screws.

The telemetering Recorder-Transmitter combination can be operated with one or two batteries; two batteries being recommended for extended life. For this arrangement —

1) Remove the jumper wire between terminals 5 and 6 of terminal board, TB3, on the Binary-Decimal Transmitter.

2) Connect the second battery to the Binary-Decimal Transmitter terminal board, TB3; the negative lead to terminal 7, the positive lead to terminal 6.

In order to operate this external timer arrangement with a single battery, —

1) Remove the jumper wire between terminals 5 and 6 of terminal board TB3, on the Binary-Decimal Transmitter.

2) Connect a separate wire lead between terminal 6 of TB3 on the Transmitter to the positive terminal of the battery used in the battery-timer harness.

For additional details refer to the Instructions furnished with the Binary-Decimal Transmitter.

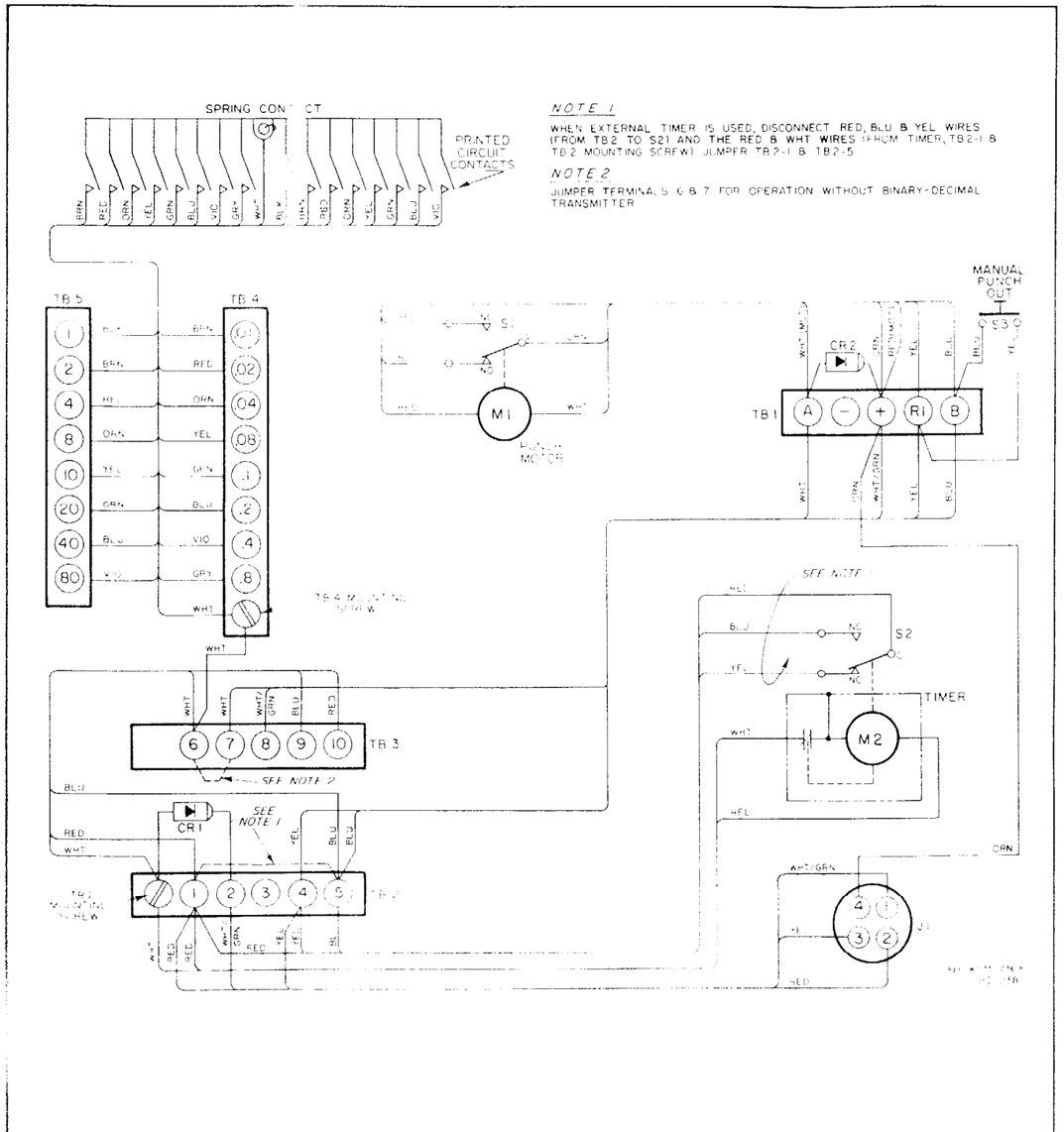

FIGURE VI WIRING DIAGRAM TELEMETERING RECORDER

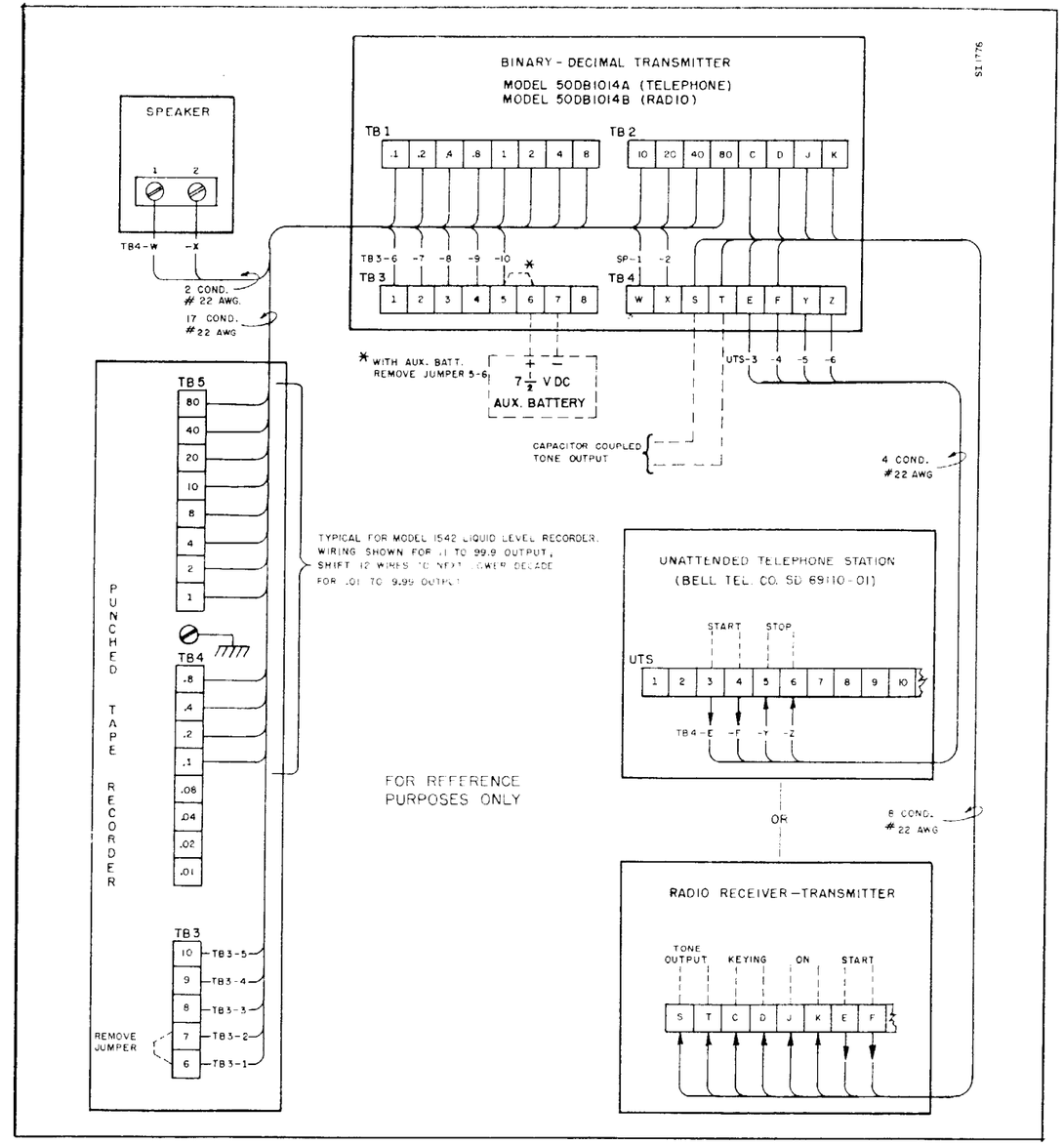

FIGURE VII INTERCONNECTION DIAGRAM, PUNCHED TAPE LEVEL RECORDER WITH BINARY-DECIMAL TRANSMITTER

FISCHER & PORTER CO.
WARMINSTER, PENNSYLVANIA, U.S.A.
766 (W)
Pub. No. 15862

INSTRUCTION BULLETIN

35-9006
Revision 1

INSTALLATION OF TELEMETERING PARTS IN SERIES 1540 PUNCHED TAPE RECORDERS (SERIES A5 AND HIGHER)

The Series 1540 Punched Tape Recorders may be adapted to provide a duplicate output of the punched value, for telemetering purposes. By installing auxiliary parts, a combination of electrical contacts are operated to transmit the recorded value by means of an F&P Binary-Decimal Transmitter. These auxiliary parts are provided as an Installation Kit consisting of the following items:

Punch Arm Assembly Group

1	Printed Circuit Ass'y.	685A347	1	Circuit Board Clamp	391D068
1	Insulator	358C135	1	Retainer Plate	355K053
1	Contact Arm	399B028	3	Binding Head Screws (#2-56 x 3/16")	006D003
1	Plate	355H530	3	Truss Head Screws (#2-56 x l/4")	005D004
1	Cable Support	424D010	3	Lockwashers, #2	085D002

BASE PLATE ASSEMBLY GROUP

2	Terminal Boards	171F008	1	Marker Strip	358D078
1	Terminal Board	171F005	1	Cable Retaining Clamp	390B022
1	Marker Strip	358D076	1	Interconnection Wire Ass'y.	677A717
1	Marker Strip	358D077	6	Binding Head Screws (#6-32 x l/2")	006H008

1. Please refer to Mounting Base drawing 355A182. Drill and tap the lower two #6-32 holes. Note the upper two are previously drilled and tapped and retain terminal board TB2. Use the same dimensions if you desire, or use the 5-contact terminal board as a template. It should be approximately 2-13/16" below the top terminal board.

2. Referring to the same drawing, drill and tap the four #6-32 holes in the base. The 8-contact terminal boards are mounted here and they can be used as templates.

3. Fasten the three terminal boards and related market strips in place using the six #6-32 x l/"2" binding head screws enclosed. (Refer to drawing 624A003 for correct placement of marker strips.)

FISCHER & PORTER CO.
WARMINSTER, PENNSYLVANIA, U.S.A.

4. Remove the plastic chad tray and data recording tape.

5, Place a piece of recording tape in die block. This keeps the punches retracted when you drop the punch arm.

6, Set the low order code disk and the high order code disk to any count having an “1” as its least significant digit; e.g., 3101. Rotate the punch out motor until the code disks are locked in this position. That is, immediately after punch out when the punch arm has just fallen off of the high part of the cam.

7. Disconnect the electrical inputs.

8. Loosen the three #6-32 fillister head screws which hold the stripper plate in place. (See drawing 624A228.) Push the stripper plate up as high as it will go and tighten the center screw to hold it in place.

9. Remove the elastic stop nut from the rear of the long screw which protrudes thru the punch arm spring. The head of this screw is in the middle of the punch arm, approximately l/2” above the punch block. Remove the spring and screw.

10. Loosen the tape guide by means of the l/4"-20 truss head screw thru the tape bracket.

11. Permit the punch arm to drop down to a horizontal position. You will have to lift up the tape guide in order to clear the punch arm.

Remove the center #2-56 binder head screw from the punch retainer plate. (See note, drawing 624A228).

13. Mount printed circuit board (with insulator between it and the arm) in place with this one screw. Be sure the three holes in the bottom of the board line up with the three related holes in the arm and then tighten center screw.

14. Install the contact arm in place so that the ends of the spring fingers are held captive in the flat milled section of the punch. Secure this part in place with the sheet metal plate and two outside screws. Once aligned (check drawing 624A228 to insure you have all parts in their correct relative position) fasten the harness support in place using the center screw.

15. Route the wire harness from the printed circuit board straight back, thru the wire support, over the tape sprocket, then to the right behind the low order code disk and down to the base plate between the pointer and sprocket support.

16. Remove the low order pointer screw; insert the cable retainer clip behind the pointer and replace the screw. The harness should be routed over to this cable clip and down under the front plate.

17. Lift up the punch arm and ease the harness thru so that it does not bunch up behind the punch arm. Make sure the harness does not touch the code disk and that there is just enough play for proper punch operation. Check the pointer position for accuracy and tighten the screw.

18. Return the punch arm to its highest position. Loosen the center screw of the stripper plate allowing it to fall in place. Make sure it catches all the punches and then tighten the three screws, Check that there is no binding or bending of punches when you pull the punch arm in and out.

19. Replace the #6-32 x 2-l/2″ flat head screw, punch arm spring and elastic stop nut. Do not tighten at this time.

20. Energize the punch motor long enough to unlock the code disk and set them to a 7777 reading, Gradually adjust the spring pressure (by means of the screw and locking nut) until the punches pierce cleanly thru the paper tape. Then tighten l-1/2 turns additional.

21. Please refer to drawing 623A540. You will note that only one set of contacts from this switch is used with telemetering application. The standard ADR has the second set wired in parallel. Clip off one set of blue, orange and yellow wires from one set of contacts. This may be done at the terminal board, if you desire. This prevents undesirable feedbacks in the telemetering transmitter″.

22. Connect the seventeen leads from the printed circuit assembly to terminal boards TB4 and TB5 now mounted to the base assembly, as illustrated in drawing WD35 -1036.

23. Using the 3-conductor wire assembly furnished in this installation kit, connect between terminal boards TB2 and TB3, as illustrated in drawing WD35-1036.

24, Check out the wiring by setting the code disks on 7777 and initiating a punch out. Connect an ohmmeter on common (TB4 mounting screw) and progressively touch the 4, 2 & 1 bit of each digit for continuity and the 8 bit of each digit for an open circuit .

25. Repeat, using 8888 as a code check. The 4, 2 & 1 bits of each digit should be open circuited and the 8 bit of each digit should show continuity.

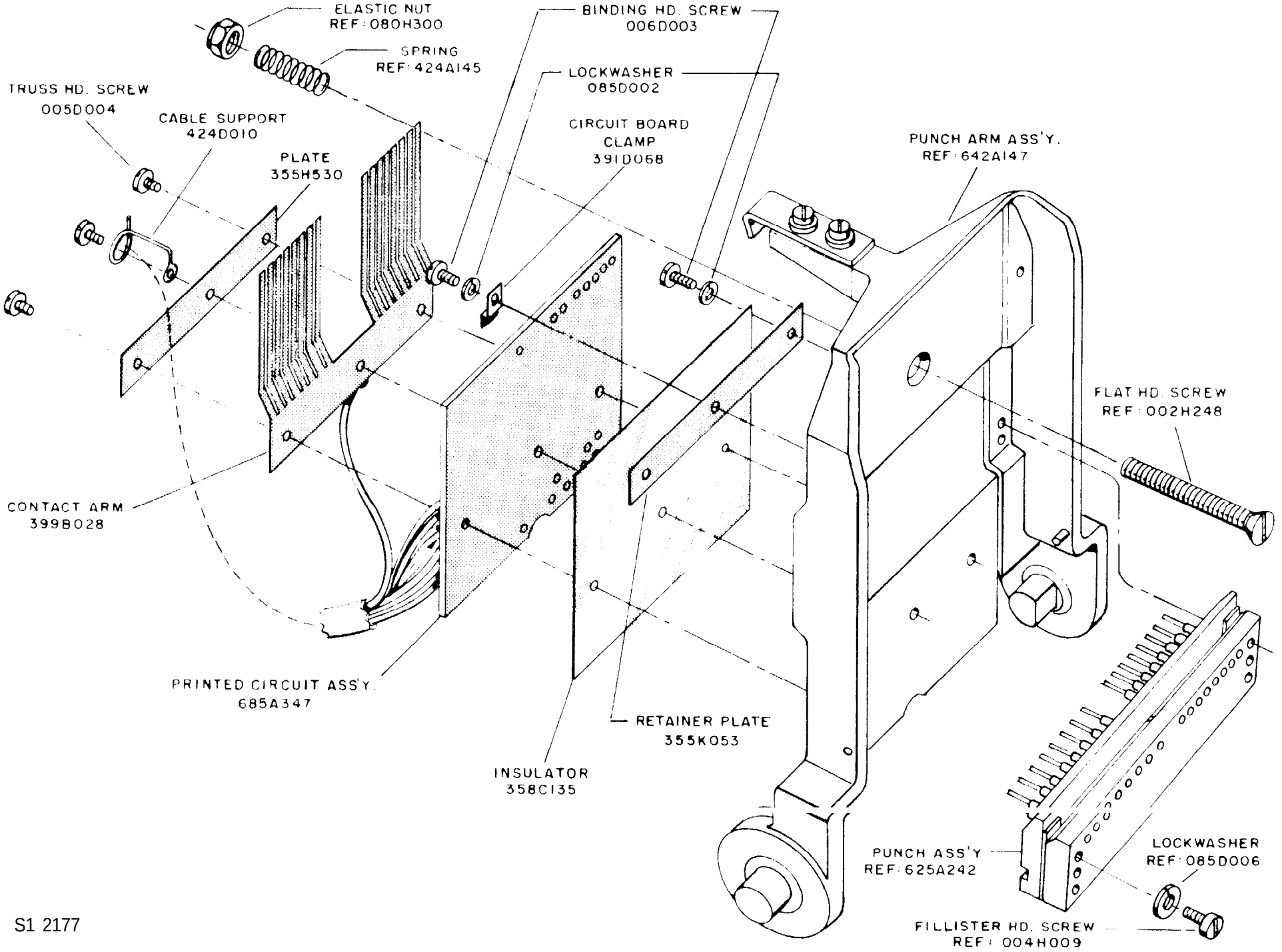
ELASTIC NUT
REF: 080H300
SPRING
REF: 424A145
BINDING HD. SCREW
006D003
LOCKWASHER
085D002
TRUSS HD. SCREW
005D004
CABLE SUPPORT
424D010
PLATE
355H530
CIRCUIT BOARD
CLAMP
391D068
PUNCH ARM ASS'Y.
REF: 642A147
FLAT HD. SCREW
REF: 002H248
CONTACT ARM
399B028
PRINTED CIRCUIT ASS'Y.
685A347
RETAINER PLATE
355K053
INSULATOR
358C135
PUNCH ASS'Y
REF: 625A242
LOCKWASHER
REF: 085D006
FILLISTER HD. SCREW
REF: 004H009

S1 2177

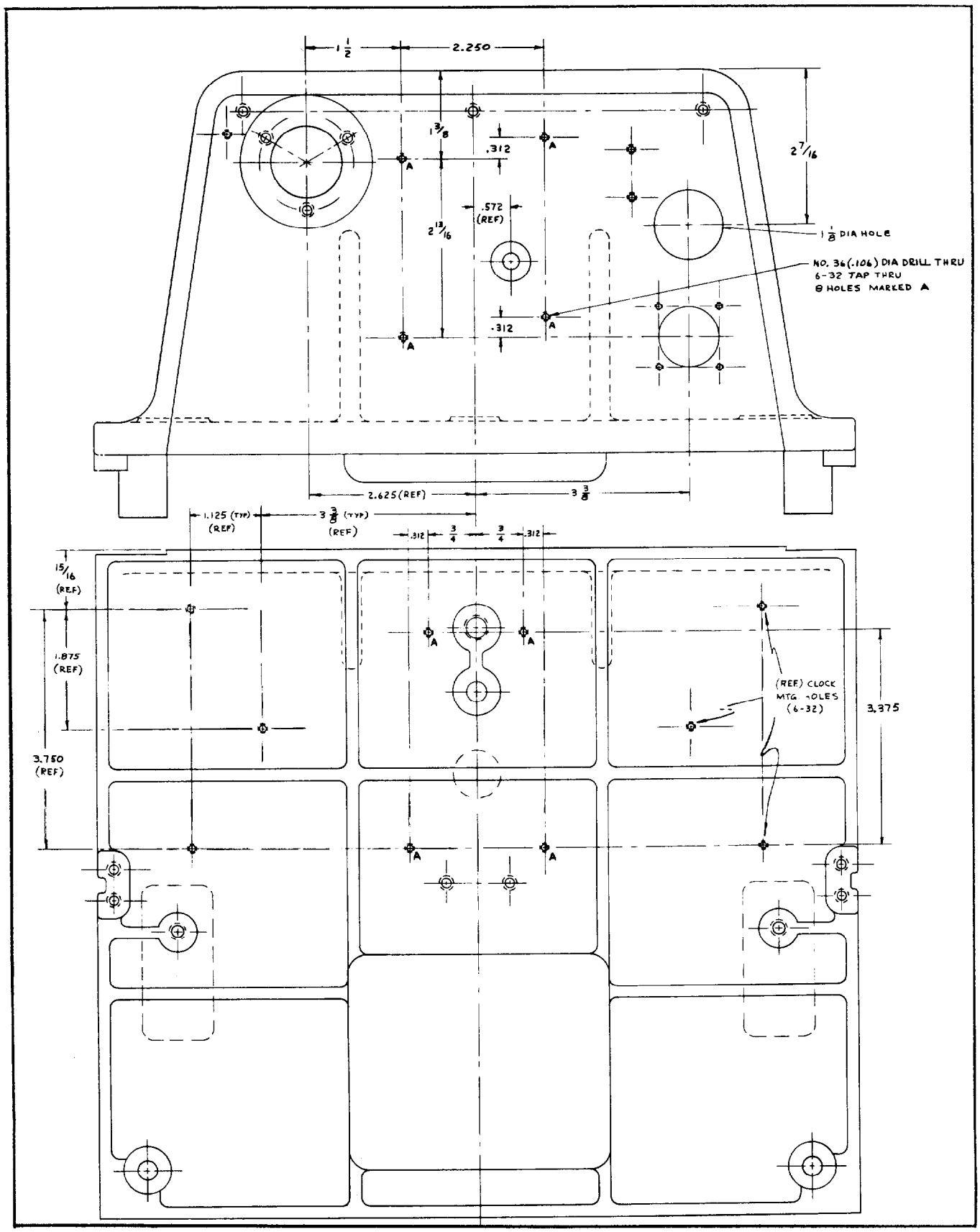

MOUNTING BASE 355A182

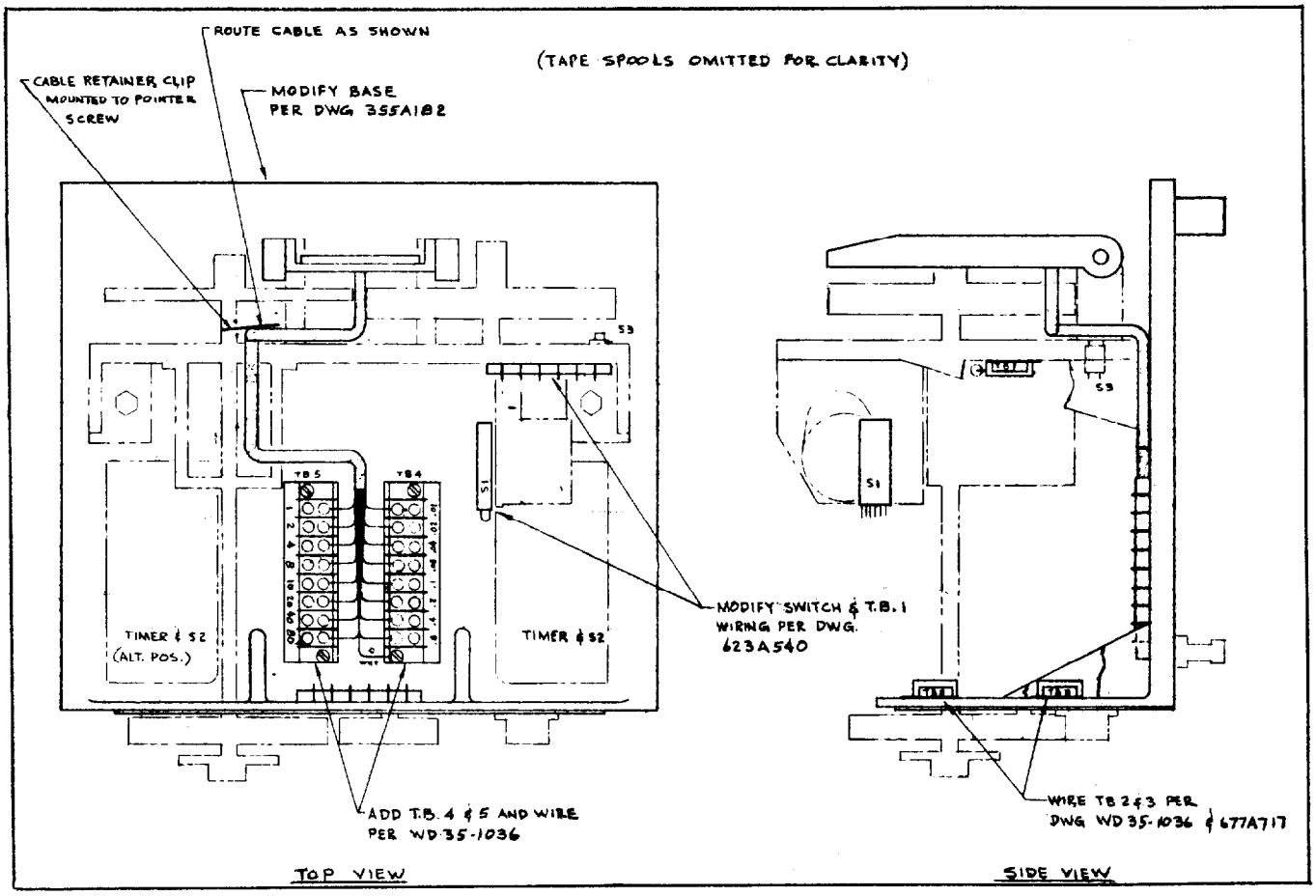

CONVERSION KIT ASEMBLY 624A003

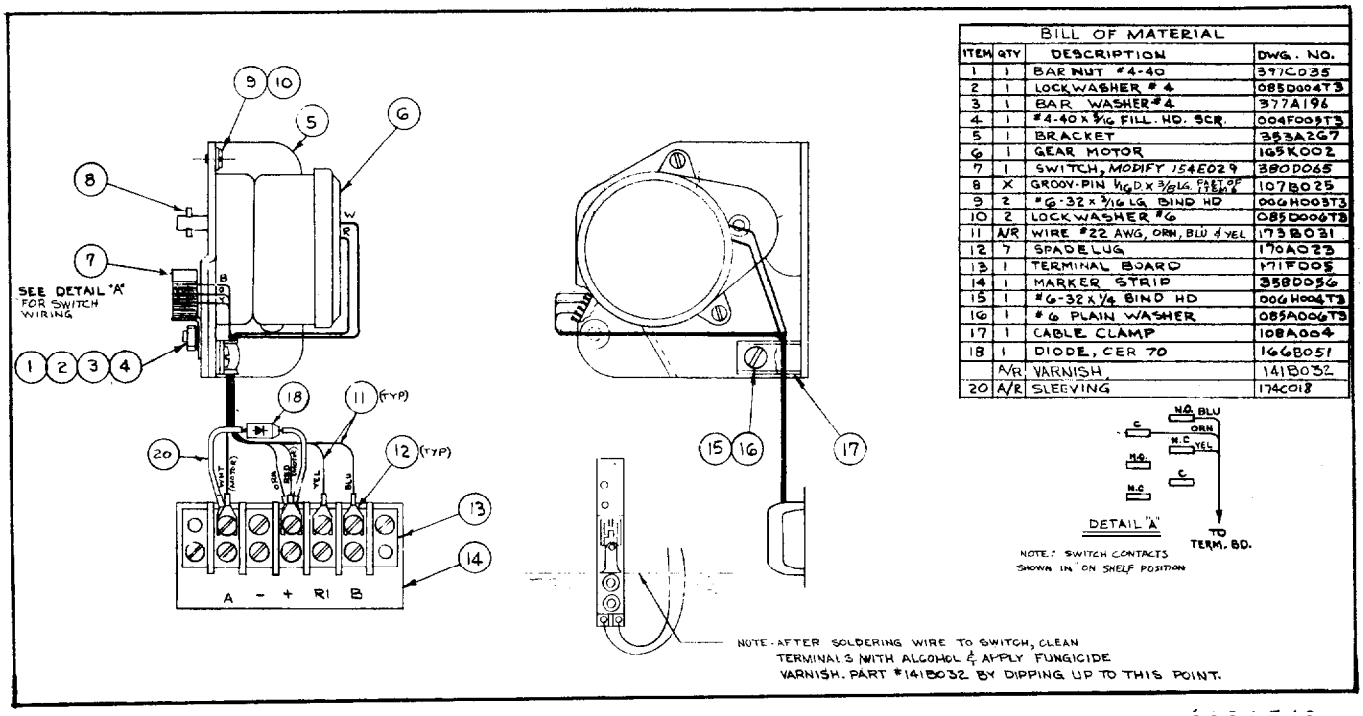

BILL OF MATERIAL

ITEM	QTY	DESCRIPTION	DWG. NO.
1	1	BAR NUT #4-40	377C035
2	1	LOCKWASHER #4	085D004T3
3	1	BAR WASHER #4	377A196
4	1	#4-40 x 5/16 FILL. HD. SCR.	004F005T3
5	1	BRACKET	353A267
6	1	GEAR MOTOR	165K002
7	1	SWITCH, MODIFY 154E029	380D065
8	X	GROOV-PIN 1/16 D x 3/8 LG. PER ITEM 4	107B025
9	2	#6-32 x 3/16 LG. BIND HD	006H003T3
10	2	LOCKWASHER #6	085D006T3
11	A/R	WIRE #22 AWG, ORN, BLU & YEL	173B031
12	7	SPADE LUG	170A023
13	1	TERMINAL BOARD	171F005
14	1	MARKER STRIP	358D036
15	1	#6-32 x 1/4 BIND HD	006H004T3
16	1	#6 PLAIN WASHER	085A006T3
17	1	CABLE CLAMP	108A004
18	1	DIODE, CER 70	166B051
	A/R	VARNISH	141B032
20	A/R	SLEEVING	174C018

MOTOR & SWITCH ASSEMBLY 623A540

NOTES:

1. USE ON SERIES A5 AND HIGHER.
2. PARTS #1 THRU #6, ARE SHIPPED UNASSEMBLED
3. PARTS SHOWN IN PHANTOM ARE SHOWN FOR REFERENCE ONLY.

BILL OF MATERIAL

ITEM	QUAN.	DESCRIPTION	PART NO.	CODE
1	1	INSULATOR	358C135	P91
2	1	PRINTED CIRCUIT ASSEMBLY	685A347	X99
3	1	PLATE	355H530	T12
4	1	SUPPORT	624D010	T10
5	3	SCREW, #2-56 x 1/4 LG. TRUSS HD.	005D004	T30
6	1	CONTACT ARM	399B028	C20
7	REF	PUNCH ARM ASSEMBLY	642A137	X99
8	REF	#6-32 x 9/16 LG. FILL. HD. SCR.	004H009	T30
9	REF	#6 LOCKWASHER	085D006	T30
10	1	RETAINER PLATE	355K053	T12
11	3	#2-56 x 3/16 BIND. HD. SCREW	006D003	T30
12	3	#2 LOCKWASHER	085D002	S31
13	1	CLAMP - CIRCUIT BOARD	331D068	T12

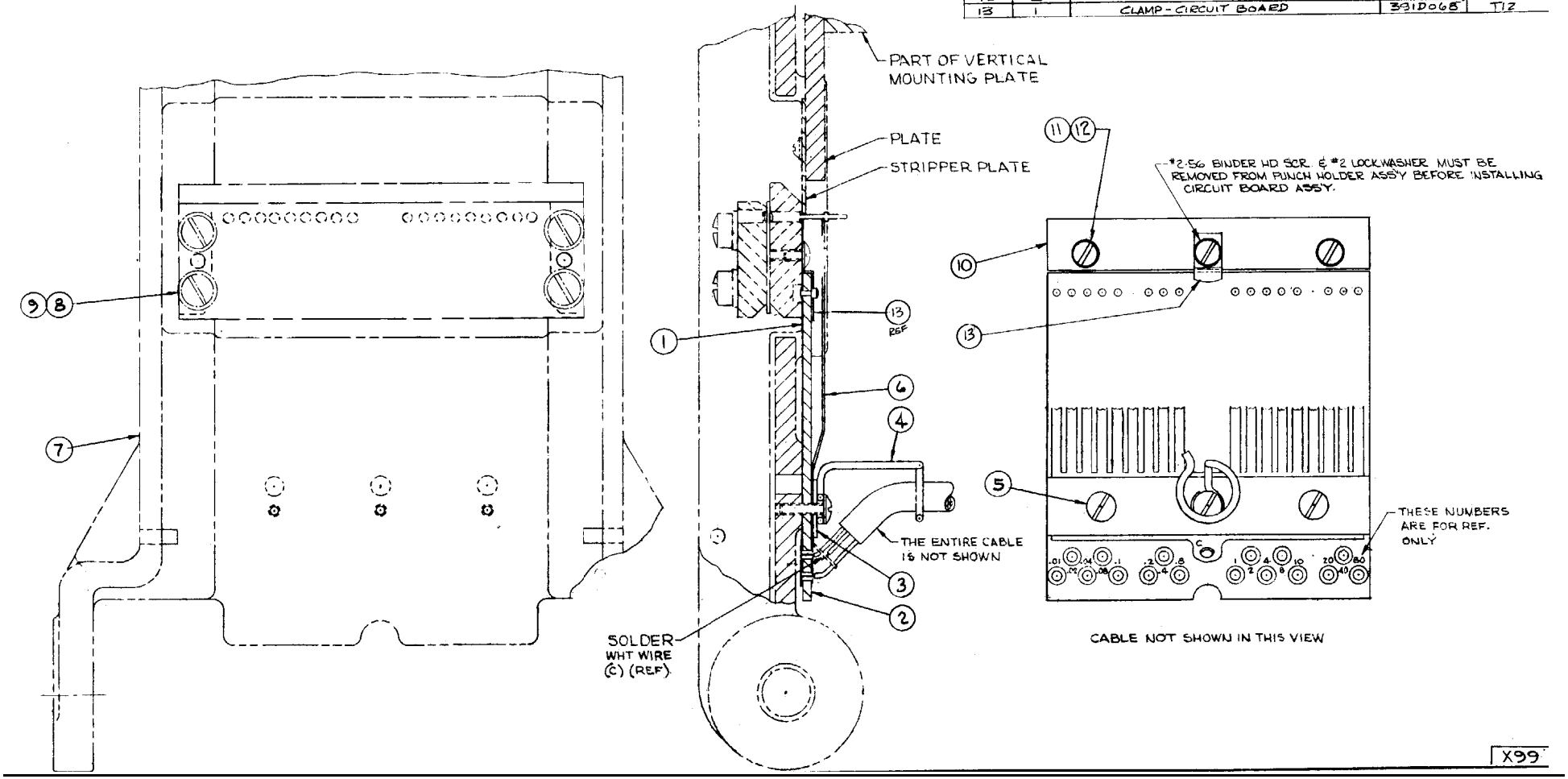

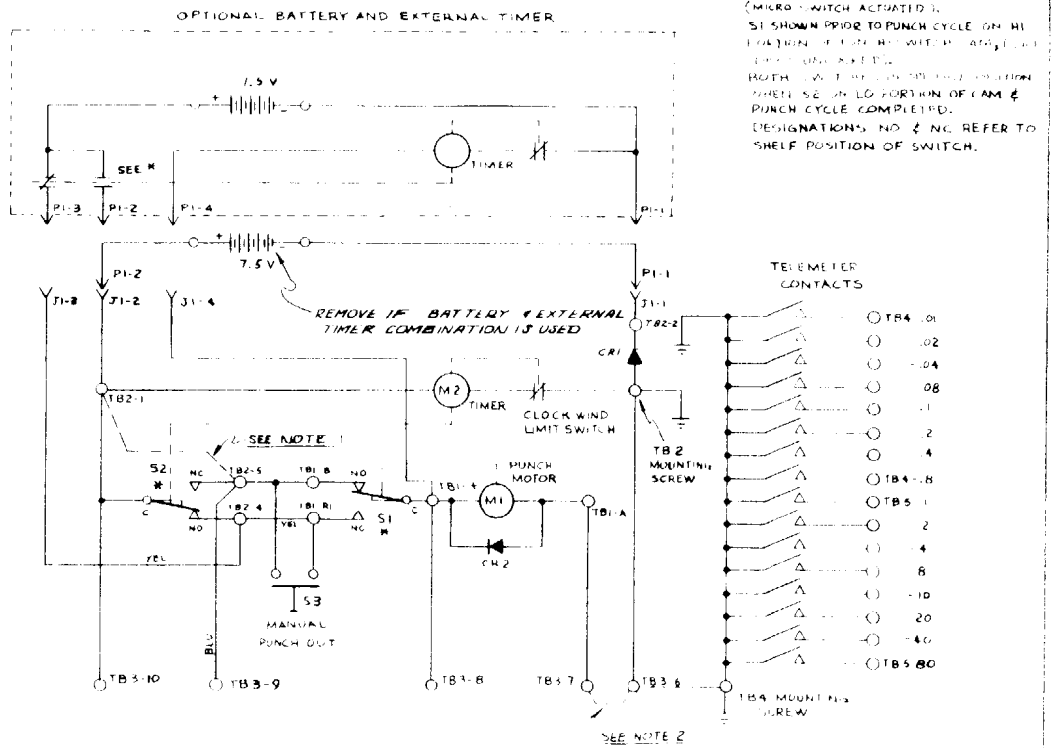

LEVEL RECORDER - ELEMENTARY CIRCUIT

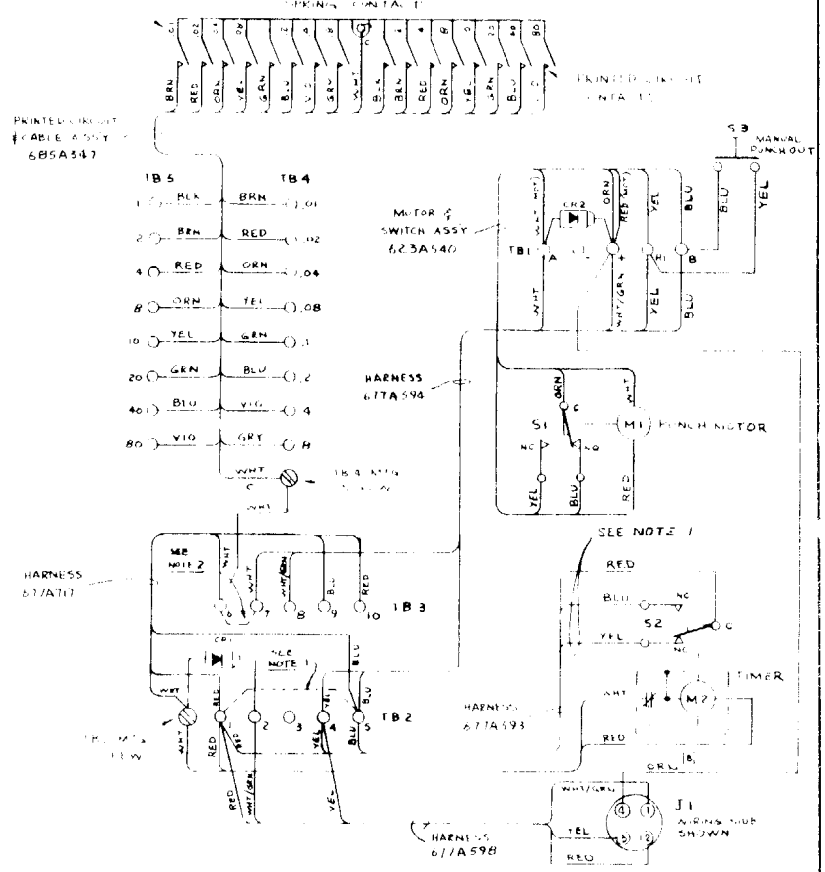

LEVEL RECORDER WIRING DIAGRAM

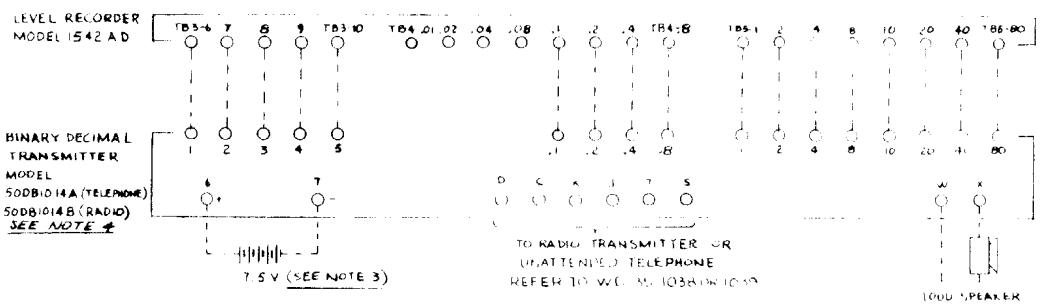

INTERCONNECTING DIAGRAM FOR LEVEL RECORDER AND BINARY DECIMAL TRANSMITTER

NOTES:

1. REFER TO INSTRUCTION BULLETIN FOR USE WITH EXTERNAL TIMER.
   ON TB2-
   REMOVE THE RED, BLUE & YELLOW SWITCH WIRES (FROM TB2- TO S2) & THE RED & WHT. CLOCK (TIMER, TB2-1 & TB2 MOUNTING SCREW) WIRES. PLACE A JUMPER WIRE BETWEEN TERMINALS TB2-1 & TB2-5. MAKE CERTAIN THAT ALL TERMINAL SCREWS ARE TIGHTENED. IF THE TIMER ASSEMBLY IS TO BE LEFT IN THE RECORDER SECURE ALL LOOSE WIRES TO AVOID ACCIDENTAL SHORTING.
2. PLACE JUMPER BETWEEN TB3-6 & TB3-7 FOR OPERATION OF LEVEL RECORDER WITHOUT BINARY DECIMAL TRANSMITTER.
3. AUXILIARY BATTERY REQUIRED WHEN OPERATING THE LEVEL RECORDER WITH AN EXTERNAL TIMER-SEE INSTRUCTION BULLETIN 50DB1014 SUPPLIED WITH BINARY DECIMAL TRANSMITTER.
4. REFER TO INSTRUCTION BULLETIN 50DB1014 FOR THE OPERATION & INSTALLATION OF THE BINARY DECIMAL TRANSMITTER.

INSTRUCTION BULLETIN

for

SERIES 1540

PUNCHED TAPE RECORDER

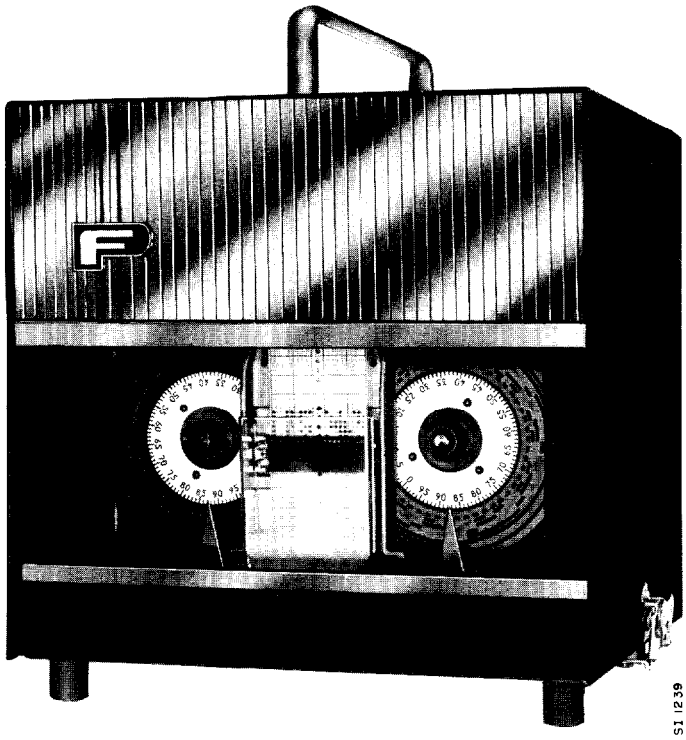

FISCHER & PORTER CO.
WARMINSTER, PENNSYLVANIA, U.S.A.

SERIES 1540 PUNCHED TAPE RECORDER

INTRODUCTION

I General Description

The Fischer & Porter Punched Tape Recorder shown on the cover of this Bulletin, is a dc operated, tape recording instrument that employs mechanical means to convert angular positions of a rotating shaft into a coded digital output.

The paper tape design as shown in Figure I, is such that visual reading can be accomplished with a minimum of effort. Each horizontal row of punched holes represents the total amount of shaft rotation in digital form at the time of punching. Each row is divided into four sections representing the units, ten, hundreds and thousands digit of the number. Each section is binary coded l-2-4-8 and mental summation of the holes (bits) punched will establish the digital reading.

The Series 1540 Punched Tape Recorder may be used in conjunction with many Fischer & Porter primary actuating devices. Liquid level may be measured by mounting a pulley on the input shaft and permitting a cable, drum, and float assembly to rotate the shaft in accordance with the position of the float in a well. Gas flow may be measured by installing a pulsing mechanism in the gas meter, the pulses generated positioning a stepping motor that in turn, rotates the input shaft of the Punched Tape Recorder. The amount of highway traffic may be measured by a pneumatic road tube or electronic vehicle detector closing a set of contacts to pulse a stepping motor. The stepping motor rotates the input shaft of the Punched Tape Recorder in a manner analogous to the vehicular count. Various types of parameters may be measured and recorded using selected F&P primary actuators. Details concerning the primary actuating devices will be found in the applicable Instruction Bulletins referenced in accordance with the application model number.

With the auxiliary equipment, a combination of electrical contacts may be operated simultaneously to present a duplicate output for telemetry purposes. In addition to supplying digital information in punched-tape form and in electrical form, the instrument is provided with direct reading calibrated disks. The punched-tape record of data can be readily interpreted visually or processed rapidly, using automatic machine techniques. A specially designed Fischer & Porter Automatic Translator enables the punched-tape data to be converted into punched cards or other computer type inputs in a minimum of time.

The operation of Punched Tape Recorder mechanism is sequentially and mechanically interlocked, thereby making it impossible for any one function to get out-of-phase with the others. The instrument is rugged in design and is mounted in an appropriate case that facilitates tape changing and routine maintenance.

II Specifications

Electrical Requirements .... 0.5 amp starting current, 100 ma running current from 7-1/2 VDC supply.

Input .. . . . . 1 shaft rev = 100 counts; torque less than 1/4″ oz.

Readout Range .... Zero to 9,999 counts.

Readout Accuracy ..... + 1/2 count.

Readout Time..... 15 seconds maximum.

Ambient Temperature Range ..... -35° to +122°F.

Data Recording Tape .... 410 +5 feet of 2-1/8″ tape to last 1 year on a 15 minute readout interval.

Physical Characteristics

Standard Enclosure ....Drip-proof with window for direct visual reading.

Dimensions ..... 12-1/4″ wd x 14⅝″ h x 11-1/4″ dp.

Weight ..... Approximately 25 pounds.

Weatherproof Enclosure... For internal battery.

Dimensions .....12″ wd x 15″ h x 13″ dp.

Weight ..... Approximately 25 pounds.

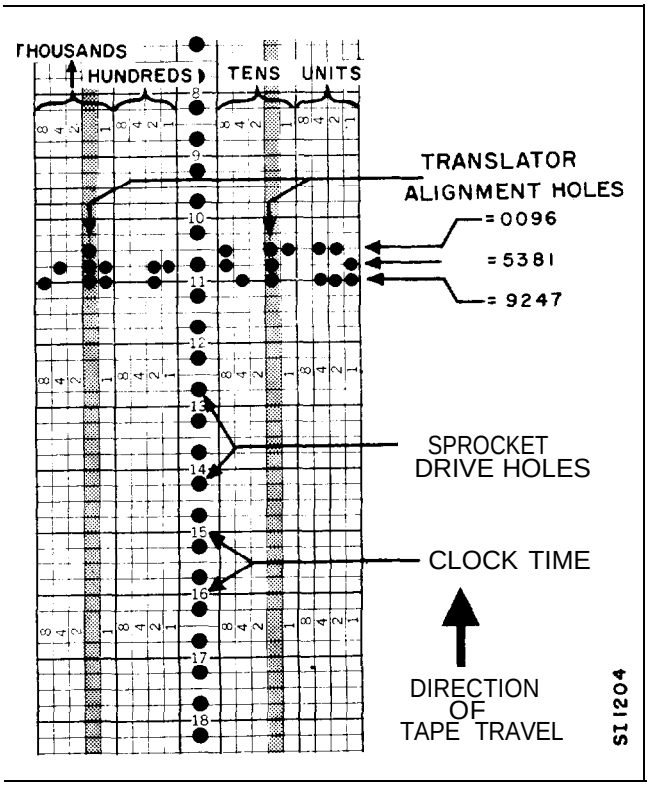

FIGURE I FACSIMILE OF DATA RECORDING TAPE

INSTALLATION-OPERATION

I Inspection

All possible precautions have been taken in packing the Punched Tape Recorder to prevent damage to the instrument during shipment. Remove the instrument from its packing case and remove all packing material. Any instructions given on the tags attached to the instrument should be followed carefully and such tags removed. The unit should be inspected immediately for indications of damage that may have occurred during shipment. All claims should be made to the shipping agent involved before attempting to install or operate this equipment.

To open the standard instrument case; (Reference Figure II)

1) Turn the side latch wings 180° and unhook the latch.

2) Lift the instrument case straight up for removal.

To open the weatherproof instrument case; (Reference Figure III)

1) Lift up and unhook the latch.

2) Swing the cover back on its hinges.

II Location

The Punched Tape Recorder encased in the standard enclosure is drip-proof and should be placed in a semi-protected area. The weatherproof enclosure may be mounted in any reasonable location. Abrupt changes in temperature and humidity as well as excessive vibration will not impair the operation of the instrument.

Those instruments operating directly from a 7-½ volt dc source are self-contained portable units and as such do not require any specialized installation procedures. Those instruments operating from an external ac line voltage supply must be placed near a source of 117 + 10% volts, 50/60 cycle power.

III Interconnections

A. Primary Actuating Unit

The primary actuating unit is that mechanism causing the input shaft of the Punched Tape Recorder to rotate. This may be a cable, drum and float assembly for measuring liquid level, a pulsing mechanism and stepping motor for gas flow and traffic counting, a weighing scale and beam arrangement for measuring precipitation accumulation, or a servo system for millivolt measurements. Refer to the appropriate publication for special interconnection and schematic diagrams.

B. Electrical Connections

Since there are varied applications of the basic Recorder, the related schematics and wiring diagrams also vary. Refer to the specific Model Instruction Bulletin for the instrument schematic and wiring diagrams.

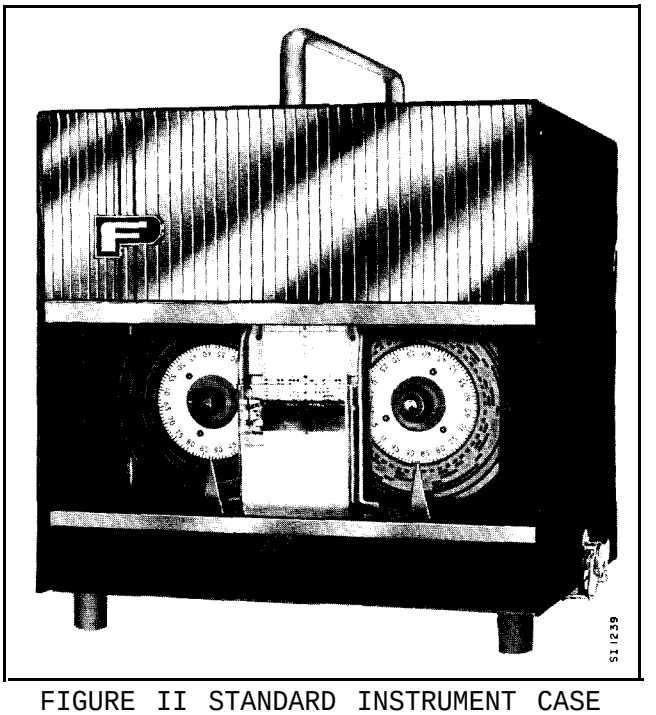

FIGURE II STANDARD INSTRUMENT CASE

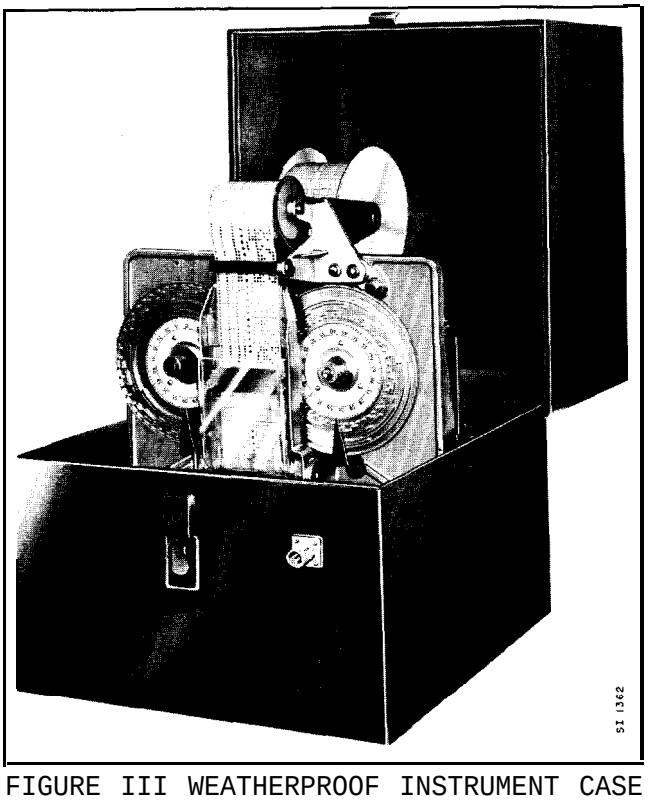

FIGURE III WEATHERPROOF INSTRUMENT CASE

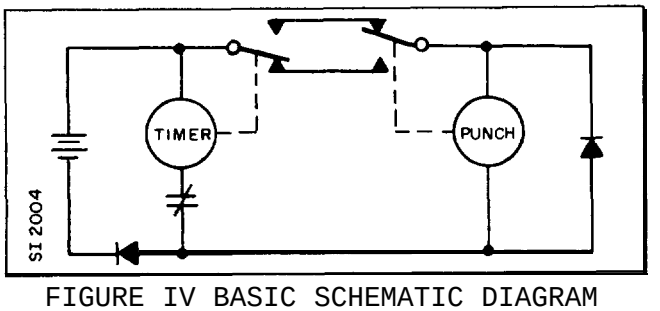

FIGURE IV BASIC SCHEMATIC DIAGRAM

IV Placing in Service

Reference to Figure V will aid in placing the Punched Tape Recorder in service. Unlatch and open the cover.

A. Installation of Data Recording Tape

1) Make certain that the power is shut off. Certain models may have a power toggle switch located on the front panel or on the timer unit. Power may be removed in the self-contained dc unit by removing the square blue plug from the receptacle on the top of the chassis.

2) Remove the plastic chad tray from the punch arm assembly by lifting and tilting the top edge outward.

3) Remove the outer tape supply spool disk by rotating counterclockwise.

4) Place a full tape roll on the tape supply spool, positioned so that the "printed time digits" are right side up facing the front of the instrument.

5) Replace the outer tape assembly spool disk.

6) Pull the end of the tape off the supply roll, leading it under the base of the punch arm assembly between the tape drive sprocket and paper retaining clamp and toward the front of the instrument.

7) Withdraw about 20" of paper tape in this manner, extending about 10" beyond the tape drive sprocket at the base of the punch arm assembly.

8) Feed the end of the paper tape between the punch holder and punch die; then take up the slack and seat the tape drive sprocket holes over the drive sprocket pins.

9) Pull the tape up behind the upper paper guide to the take-up spool.

10) Fold the end of the tape over and slip the end of the tape into the lateral slit in the periphery of this spool, inserting the tape down into the center portion of the spool. Make certain that the paper tape is square with the spool.

11) Take up the slack in the tape by rotating the take-up spool in a forward direction.

12) Take up any final slack by pulling gently on the spring drive belt.

B. Time Synchronization

The Punched Tape Recorder records information based on a time constant, it is now necessary to synchronize the recording tape, and the timer mechanism with the actual time of day.

1) Re-apply power to the instrument.

2) The F&P Timer Unit shown in Figures VI & VII, contains a cam that can be adjusted clockwise by rotating the protruding stem. The 15 minute interval timer has a four-step cut cam, the 30 minute interval timer has a two-step cut cam, the hourly timer a single-step cut cam, and the 5 minute timer has a twelve-step cut cam.

CAUTION

DO NOT ROTATE THE CAM IN A REVERSE DIRECTION.

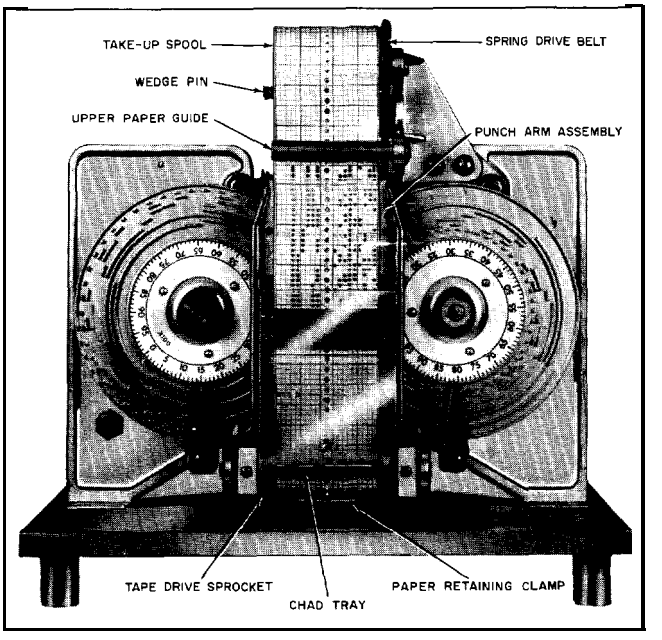

FIGURE V INSTALLATION OF DATA TAPE

3) Rotate the timer cam to the punch out position and permit the cam follower switch actuator to drop off the cam and initiate punch out. Wait for the motor to stop thereby allowing the programming shaft to complete its revolution.

4) Remove power from the instrument.

5) Refer to Figure I, a facsimile of the recording tape, and note the center column designating the time of day based on a 24 hour clock. Horizontal line graduations between each of the hour digits represent the appropriate time increments. To synchronize the instrument, proceed as follows:

6) Position the recording tape so that the horizontal line on the tape, corresponding to the next increment of the actual time of day, is in the punching position as viewed through the punch holes, or that the horizontal line on the tape corresponding to the previous increment of time is just even with the upper surface of the punch die.

7) Mechanically align the cam follower-switch actuator with the actual time of day to the minute, within the cam increment. Assuming a 15 minute cycle timer and that actual time of day is 3:20 P.M., or 5 minutes past the start of a time increment, the cam follower-switch actuator will be placed at the 5th division past any one of the cam drop-off points. In this manner the punch out will be initiated after a 10 minute delay, to correspond with the 15:30 desired punch out.

8) Apply power to the instrument; synchronization is complete.

V Routine Maintenance

A. General

Normal care exercised in the handling and operation of this equipment will go far toward providing trouble-free service. Servicing will, for the most part, be devoted to replacement of data recording tape, punching alignment of the tape, and time synchronization.

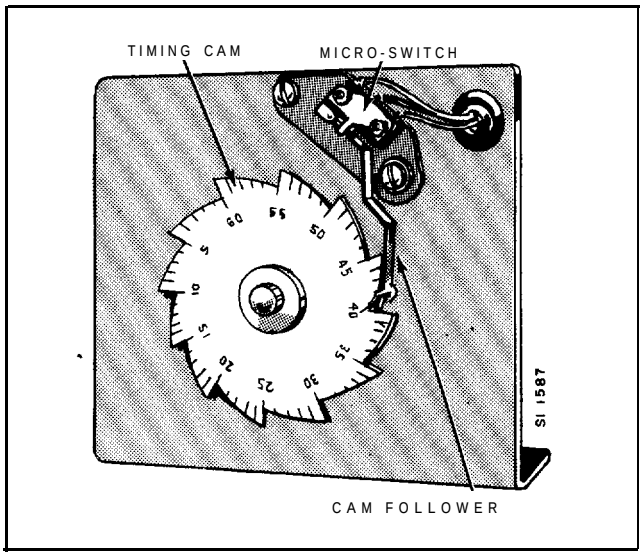

FIGURE VI TIMER UNIT, DC TYPE

Should problems arise which cannot be solved by normal trouble-shooting procedures, complete information as to the nature of the difficulty should be referred to the manufacturers service department. Instructions covering corrective measures and parts replacement, if component failure is indicated, will be furnished promptly.

B. Removing Recorded Tape

At the completion of a recording period (daily, weekly, monthly, etc.), when it is necessary to remove a recorded portion of the recording tape; use the following procedure:

1) Unlatch and lift up the instrument cover.

2) Remove the plastic chad tray.

3) Mark the date, time of removal, and any other pertinent information on the recording tape.

4) From the underside of the instrument below the tape sprocket drive, draw approximately 20" of slack tape from the supply spool, releasing the tape from the drive sprocket pins, or hand rotate the sprocket until the last punched reading has been wound on the take-up spool.

5) From the top of the punch arm assembly pull the data recording tape past the punching position so as to take up most of the slack.

6) Tear the tape in two, a few inches below the last recorded position, leaving the unrecorded end loose.

7) Roll up the remaining length of recorded tape onto the take-up spool, winding it tightly.

8) To remove the recorded tape from the take-up spool, slip the recorded tape off the spool by grasping the inner and outer tape roll surfaces with the thumb and forefinger, at the cut-out position provided on the spool.

8) The removed portion of data recording tape may be fastened with a paper clip or rubber band and identification markings may be made. Take care not to bend or fold the roll of recording tape, as this may cause difficulties in subsequent processing through the F&P Automatic Translator.

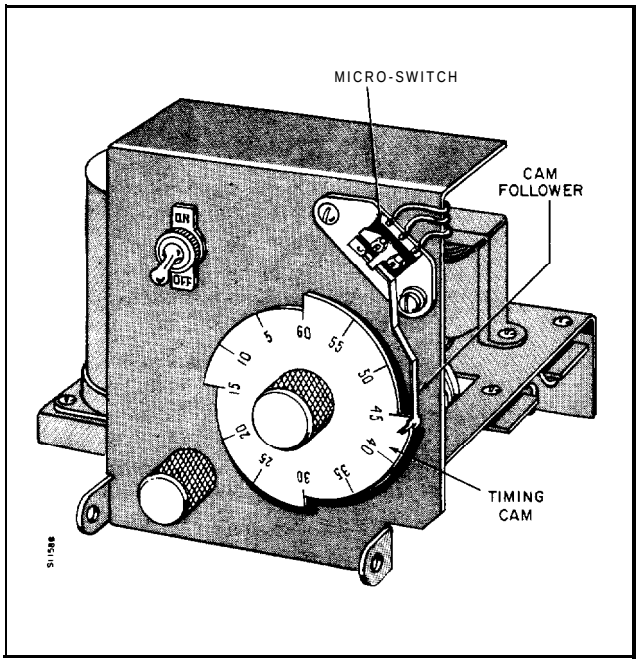

FIGURE VII TIMER UNIT, AC TYPE

10) Rethread the loose end of the data recording tape, following the instructions in Section IV. A., of this Part.

11) Check the remaining quantity of data recording tape on the supply roll to see whether a sufficient quantity remains for the next recording period.

12) Make certain to reposition the data recording tape on the drive sprocket in proper relation to the time of day. Refer to Section IV. B., Time Synchronization.

C. Power Failure

To determine whether there has been a power failure of the Punched Tape Recorder, it is necessary to note on the tape the date and time the recording commenced, and the date and time of the last punch before removal. Correlation of this information will readily indicate whether a power failure has occurred during the recording period and the duration of this power failure. In the event power has failed, the timing of the instrument will be out of synchronism and corrective action will be necessary.

D. Changing Time Cycle

In the event that it becomes essential to change the timing cycle of the Punched Tape Recorder, (e.g., from 15 minute punch out intervals to 30 minute intervals,) it is only necessary to change the timing cam and recording tape. This field change may be accomplished with minimum effort, as follows:

The timing cam is fixed to the timer shaft by means of a knurled nut and washer or a #4-40 set screw in the cam knob. Remove the nut and washer or knob as applicable, slide the timing cam off from the shaft. Replace with a new timing cam.

The data recording tape must be changed to conform with the new timing cycle.

PRINCIPLES OF OPERATION

I General

The Series 1540 Punched Tape Recorder mechanically converts angular positions of a rotating shaft into a coded digital output. Various types of parameters may be measured and recorded, using selected auxiliary components. Reference may be made to specific Instruction Bulletins for the primary actuating unit that positions the shaft of this instrument in a position analogous to the measured variable.

Operation of the Punched Tape Recorder can best be described by considering it as two interrelated mechanisms; these are the input gearing-count memory system and the punch programming cycle system. The input system receives the shaft motion from an external source and converts this rotation to successive positions of memory code disks. By means of a clock mechanism, the punch programming system initiates the punch demand and establishes the various punching and reset operations required for recording measured values on a data recording tape. The following paragraphs describe these functions in detail.

II Input Gearing and Code System

A. Input Shaft and Gearing

Reference to Figure VIII will aid in the following discussion.

The input shaft of the Punched Tape Recorder receives rotary input motion from an external source. The external source may be geared to the instrument to obtain any convenient ratio between rotation of the recorder input shaft and rotation of the external source mechanism.

Fastened to the forward end of the input shaft is a detent wheel having 100 sharp edged teeth to which is attached the low-order analog code disk. Mounted axially and fixed to the shaft, is a worm gear so arranged that a controlled axial movement is permitted. Mounted at the end of the worm gear, is a collar butting against a rocker arm that is used to move the worm gear axially against the pressure of an interposed spring. The function of this rocker arm will be discussed subsequently. Attached to a transverse shaft and driven by the worm gear is a worm wheel having 100 teeth. Attached to 'the other end of the transverse shaft is a 54-tooth pinion gear meshing with and driving a 54-tooth spur gear that is physically the hub of an 80-tooth bevel gear. This bevel gear meshes with the bevel teeth of a second code disk referred to as the high-order code disk. The high-order code disk is mounted on the front face of the instrument on an axis parallel to the low-order code disk.

In this manner, the rotary motion of the input shaft drives the low-order code disk on a 1:1 ratio and further drives the high-order code disk on a 100:1 ratio.

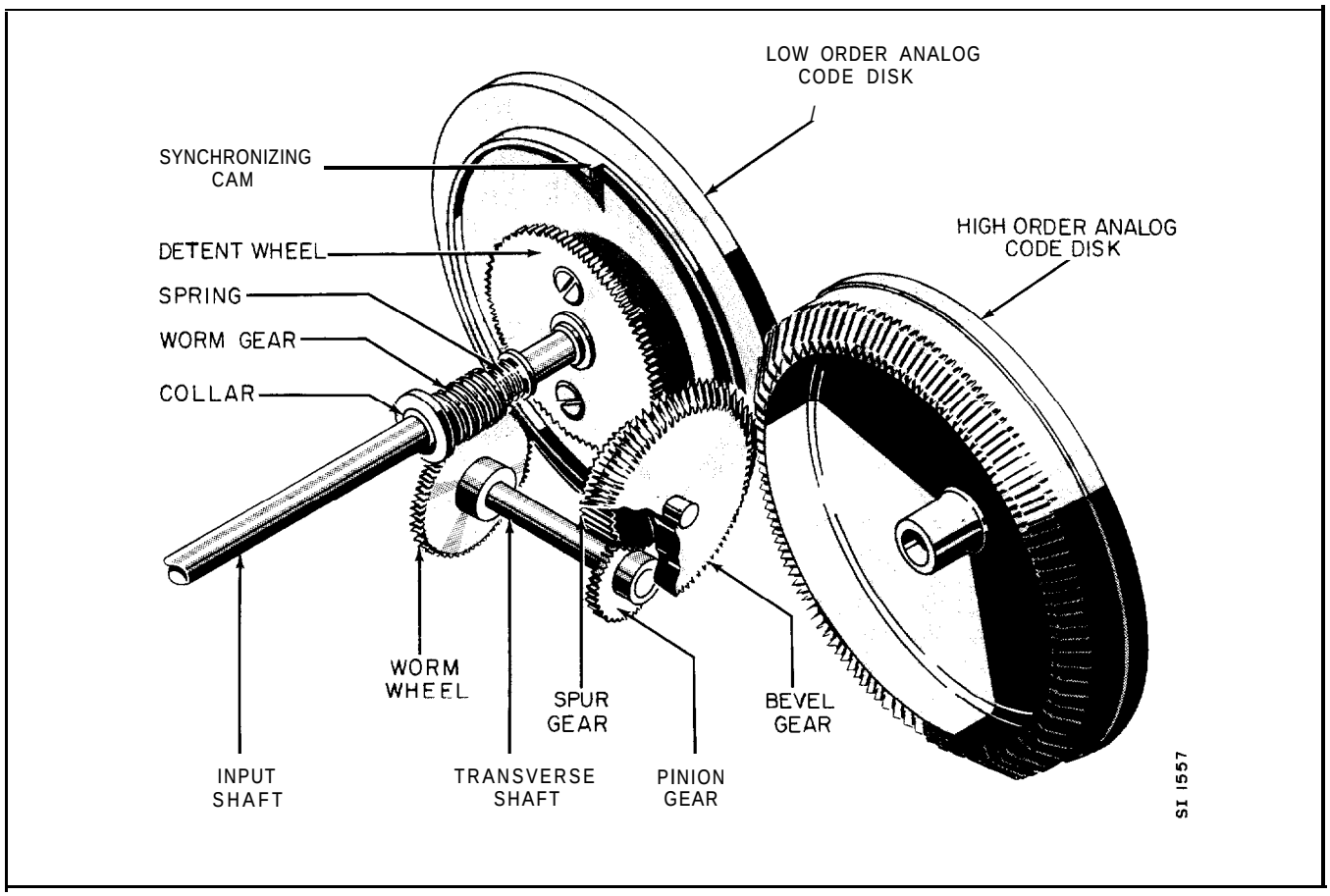

FIGURE VIII INPUT SHAFT AND GEARING

B. Code Disks

Reference to Figure IX will aid in the following text.

Both the low-order and high-order code disks have 100 discrete radial positions: the former by means of the aforementioned detent wheel and 'the latter by means of the integrally machined bevel teeth. Radially on the front surface of the code disk and associated with each of the 100 ratchet teeth positions, is an arrangement of hills and valleys. At any point on the disk, this arrangement represents, in binary decimal code, the number of input shaft revolutions required to advance the code disks from zero position to that particular scale position: i.e., the low-order code disk representing the units and tens digits and the high-order code disk, representing the hundreds and thousands digits.

These hills and valleys on the front surface of the code disk are used to actuate the proper punches when recording the registered value. This subject will be discussed subsequently.

The inner area of the front surface of each code disk has a circular dial affixed. The dial is engraved with 100 graduations and is appropriately indexed. A pair of pointers indicate the accumulated count at any shaft position and is visible through a window provided in the enclosure or when the instrument cover is open, depending upon the type enclosure. This makes possible a visual reading at any time during instrument operation.

III Programming System

A. Timer Unit

The Timer Unit, consisting of clock, cam, follower and switch assembly, is bracket mounted to either side of the base of the Recorder. The clock is encased in a plastic container and derives its operating power from an external 7-½ VDC dry cell. The clock continuously rotates a cam, so arranged that a switch is actuated every 5, 15, 30 or 60 minutes or each 12 hours as specified. The cam is also used for setting the clock time of day within the specified cycle.

B. Drive Motor and Switch

Reference to Figures X and XI will aid in the following text.

The source of programming power is derived from a small gear motor operating from the 7-1/2 VDC source. This motor serves to drive a hex shaft to which are mounted a series of actuating cams utilized for programming purposes. In order to obtain a single revolution of the programming shaft for each punch cycle, a switch and motor cam arrange ment is used. This initial drive is derived by means of the cam follower-switch actuator riding on the outer periphery of the timer cam.

Refer to Figure IV a Shematic Diagram and Figure XI the Timing Cycle, as an aid to the following text.

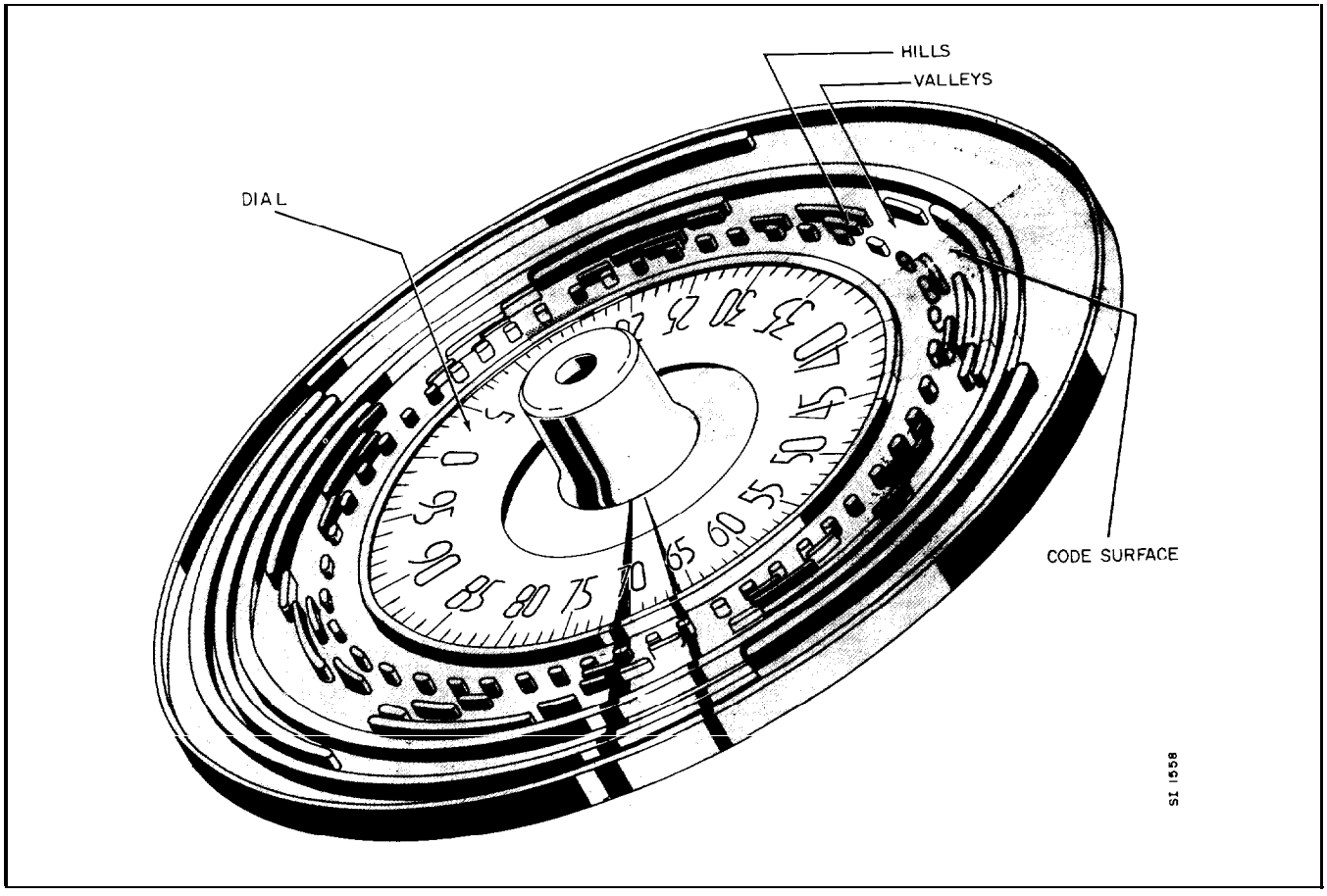

FIGURE IX ANALOG CODE DISK

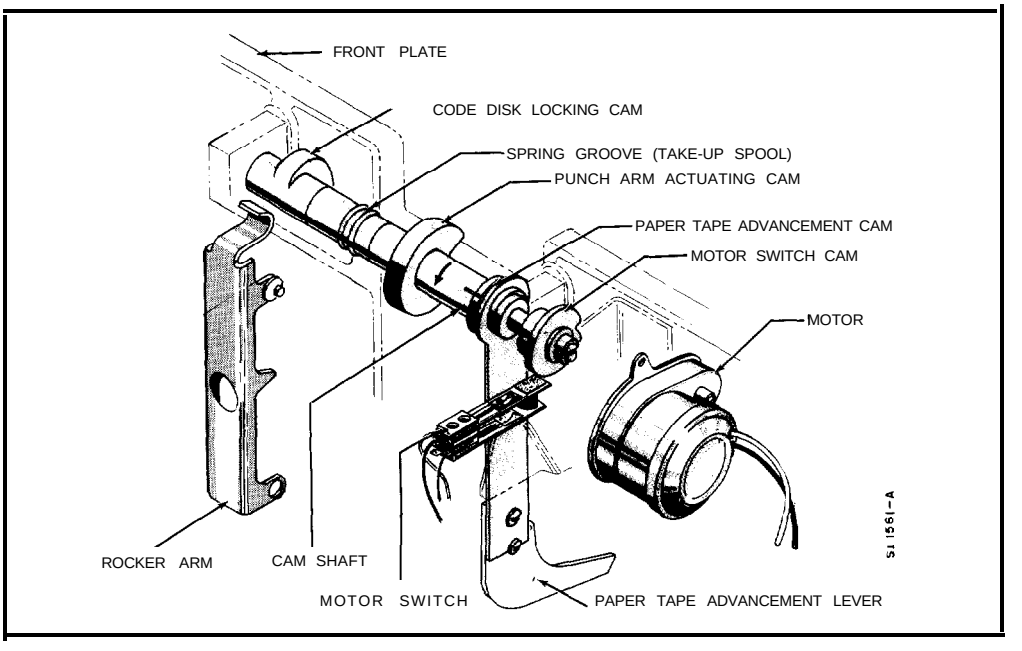

FIGURE X PROGRAMMING CAM SHAFT

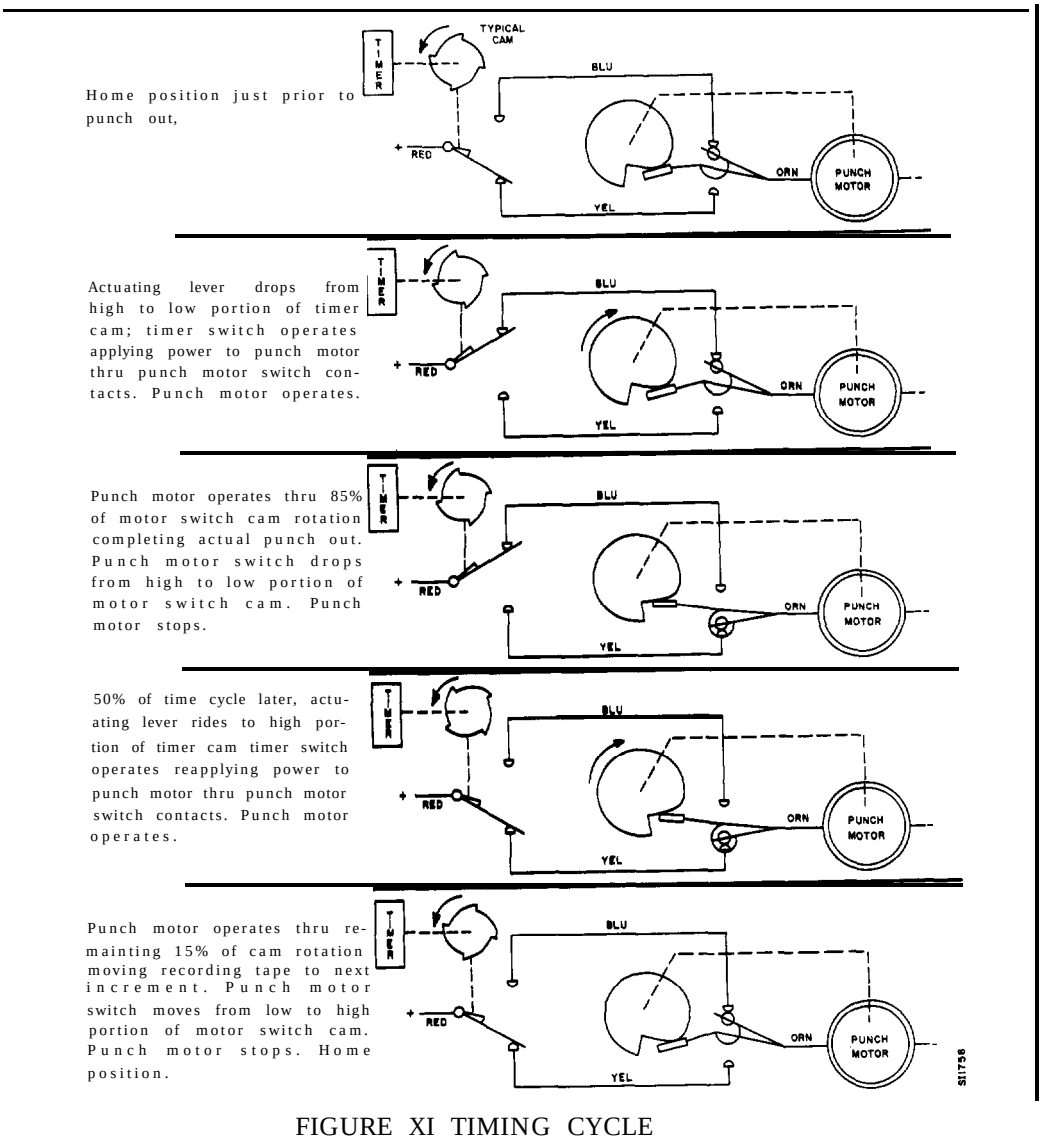

FIGURE XI TIMING CYCLE

PRINCIPLES OF OPERATION (Continued)

When the timer cam follower drops from the high portion (home portion) to the low portion of the cam, the timer switch operates and applies power to the punch motor through the punch motor switch contacts. The punch motor remains energized until the motor switch leaf drops from the high to the low portion of the motor switch cam, approximately 10 seconds or 85% of the total instrument cam shaft rotation, thereby de-energizing the punch motor. During this rotational period, punch out is accomplished and the input shaft unlocked, free to rotate and accept input signal.

The Timer Unit switch remains in the closed position for approximately 50% of the time cycle, while the actuating lever slowly rides upward to the high position of the timer cam, after which the switch contacts reverse to once again complete an energizing circuit to the punch motor. The punch motor operates to complete the 15% required for one *rev*olution of the cam shaft, at which time the motor switch cam operates the motor switch to break the energizing circuit.

C. Code Disc Lock-Out

Reference to Figures X & XII will aid in the following text.

Mounted on the programming shaft, at the end furthermost from the drive motor, is the code disk locking cam. This cam engages the rocker arm at the upper end of the rocker arm. The rocker arm is pivot-fastened at the base and is spring augmented so that it is held in the rearward position by means of the locking cam when inactive. The rocker arm also has a projecting finger that engages the collar fastened to the end of the worm gear for the axial movement previously mentioned. In addition, the locking lever is pivot mounted at the mid-point of the rocker arm.

When the instrument is in the inactive position, the high portion of the code disk locking cam engages the top of the rocker arm to hold the rocker arm in its rearmost position, with the result that the locking lever tang engages the locking lever stop and the locking lever heel is lifted clear of the detent wheel. Thus, there is no restraint imposed on the free movement of the input shaft and code disks.

Upon rotation of the cam shaft (via drive motor actuation), the code disk locking cam makes a single revolution permitting the rocker arm to move slowly in a forward direction under the spring tension. As the rocker arm moves forward, the heel portion of the locking lever is lowered so that its sharp edge engages with the sharp edged teeth of the detent wheel thereby immobilizing the detent wheel and attached code disk. As the locking lever seats and moves forward the toe portion engages the synchronizing cam surface on the rear of the low-order code disk. Thus, it can be seen that upon initiation of a punch cycle, the code disks are locked in position before actual punch-out occurs.

D. Non-Ambiguity

As the low-order code disk completes 100 counts and passes through zero, it is required that the high-order code disk increases one count. To eliminate all possibilities of an error in readout from the high-order code disk as the low-order code disk passes through zero, a mechanical cam and gearing arrangement is incorporated into the instrument linkage between the low-order and the high-order code disks. Without this mechanical compensation, the possibility of error arises since the high-order code disk moves only 1/10,000th of a revolution for each successive discrete position of the low-order code disk; yet, the high-order code disk must give the same readout (e.g., 12 for the 1200 to 1299 values) for exactly 100 successive positions of the low-order code disk and must then assume the next coded value (e.g., 13 for 1300 to 1399 values). In the specific case cited, for example, there must be absolutely no chance that the high-order code disk will read 13 while the low-order code disk is still only at 99 position (for the 1299 value).

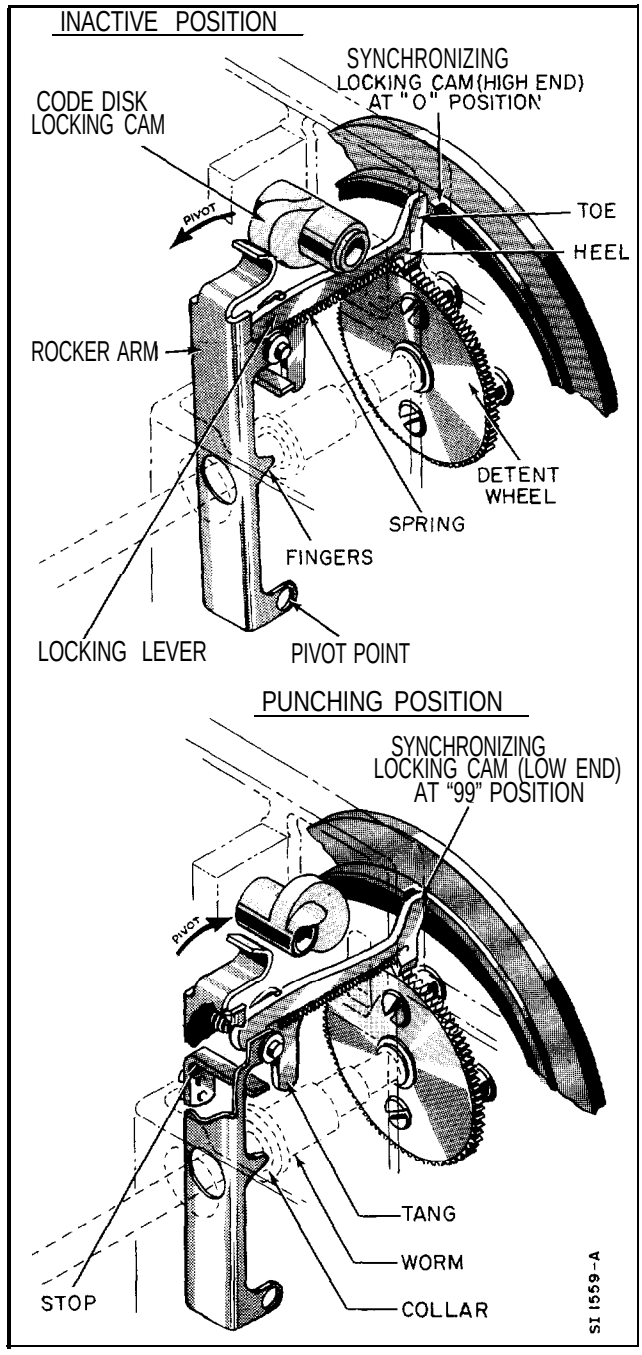

FIGURE XII CODE DISK LOCKOUT

PRINCIPLES OF OPERATION (Continued)

The mechanism preventing ambiguous readings consists of the synchronizing cam cast on the rear surface of the low-order code disk and on the toe position of the locking lever. The synchronizing cam step is located so that the locking lever toe hits the high portion of the cam when the low-order code disk is at the zero position, and hits the low Portion of the cam when the low-order disk is at the 99 position; the cam slope being uniform throughout its entire circumference.

In this manner, when the low-order disk is in 'the 90's, the locking lever moves further until the toe touches the low level of the synchronizing cam, thereby allowing the rocker arm assembly to pivot in a more forward position. The rocking arm projecting fingers push against the collar and displace the worm gear axially. This axial movement of the worm gear results in a corresponding movement of the worm wheel, and accordingly of the high-order code disk. This movement compensates for the small increment of the high-order code disk travel beyond the position that the high-order code disk had at the time that the low-order code disk was at its previous lower zero position. In other words, this compensating movement assures that while the low-order code disk may be in the 99 position, the high-order code disk will not prematurely advance to the 100 position. Since the locking lever does not ride the synchronizing cam, but rather engages it only upon readout, there is no wear on the cam assembly.

E. Punch Out

Mounted at the mid-point of the programming shaft is the punch arm actuating cam; refer to Figure X. At the rest position, this cam exerts a force against the punch rocker arm roller located at the top portion of the punch rocker arm. The punch rocker arm is pivot fastened at the base. Therefore, with this pressure exerted at the upper portion, the punch rocker arm will be held away from the main frame of the instrument.

A helical spring is so arranged that a counter force is created which tends to bring the punch rocker arm back toward the main frame and the code disks.

Upon initial application of power to the motor, and consequent rotation of the programming shaft, the punch rocker arm roller drops off the high end of the punch arm actuating cam and, owing to the spring force exerted, the punch rocker arm pivots back to the code disk face.

Detailed functioning of the punches will be discussed in Section IV.

F. Recording Tape Drive

In addition to providing energy for all of the previously described functions, the motor also provides driving energy for the recording tape feed system. The programming shaft mounts an eccentric cam to which is fastened the paper tape advancement lever; refer to Figure X. The lower end of the lever contains a paw1 that intermittently ratchets the tape drive sprocket advancing the data recording tape exactly 1/10th inch during rotation of the programming shaft. The eccentric cam is so adjusted that the recording tape is completely advanced prior to the punch out operation.

A spring belt attached to the programming shaft (seats in a groove) supplies a driving force to the tape take-up spool. With this arrangement, the data recording tape is always held in slight tension.

IV Punching and Reset Mechanism

The punch arm assembly consists basically of the punch rocking frame pivot mounted by means of a shaft through its lower-most portion, and the punch holder assembly attached to the center portion. A horizontally extended arm at the top of the punch arm assembly has a roller which acts as a follower for the punch arm actuating cam on the programming shaft. A rocking movement is imparted to the punch arm assembly by this cam; whereas the frame roller is held against the cam by the force of a helical spring.

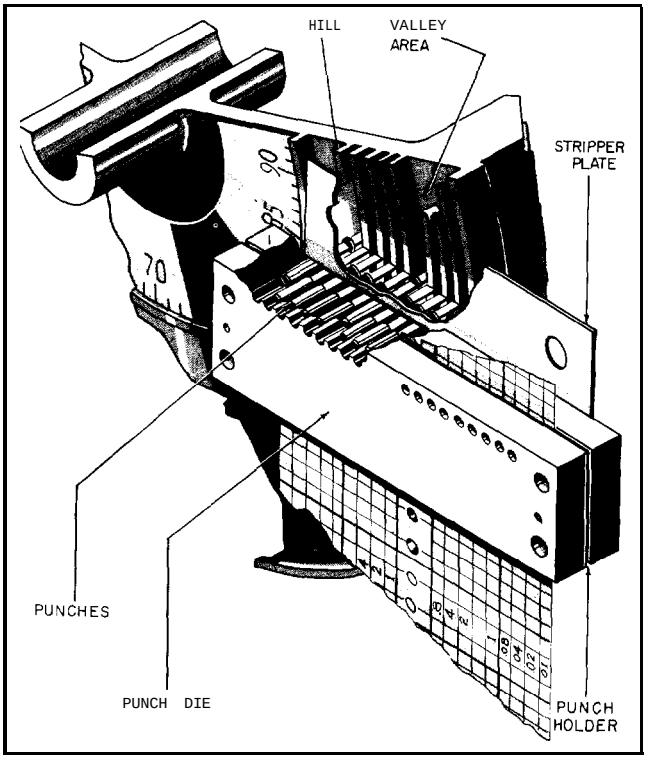

FIGURE XIII PUNCHING MECHANISM

The punch holder assembly consists of a punch holder, provided with guide openings in which the punches are arranged for sliding axial motion, and a punch die with mating guide opening spaced slightly beyond to provide for data recording tape passage; refer to Figure XIII.

One punch is provided for each of the binary-decimal channels and two additional punches are provided for Translator sprocket alignment purposes.

As the punch arm roller drops off the actuating cam, the punch arm assembly pivots in toward the code disks. In this manner, the punches come in contact with the code disks at the proper Position

to sense the coded value of total shaft revolutions received as instrument input from the transducing equipment. The individual punches striking a hill on the face of the code disk, punch a hole in the recording tape passing between the punch holder and the punch die. The punches that fall into a valley on the face of the code disk do not punch the recording tape. As the punch arm actuating cam continues its rotation (driven by the programming shaft), the punch arm assembly is pivoted out and away from the code disk to its normal position, and a stripper plate produces positive extraction of the actuated punches from the recording tape.

V Code and Tape Design

The code used in arranging the hills and valleys on the front surface of the code disk, is in the binary-coded decimal system. Four binary digits (bits) 1, 2, 4 and 8 are added together to form a single digit. For example, the decimal digit 3 would be formed by adding binary bits 1 and 2. The decimal digit 6 would result from adding 2 and 4, and so on, up to the decimal digit 9, being a combination of the binary bits 1 and 8. The greatest count the recorder will be required to total is a four place digit number, 9999. To provide this range a total of 16 punch positions are needed, four for each of the four decimal digits.

The punched columns on the data recording tape are printed in such a manner as to facilitate reading the actual values directly. The tape has a total of 18 columns; 9 each on either side of the center that is provided with a sprocket drive hole. Each half of the tape also contains a column for punching the alignment holes required for translation purposes. To determine a value that has been punched on the tape, simply add the values of the punched holes to obtain each digit comprising the value, as indicated in Figure I.

The recording tape used in the Punched Tape Recorder is time printed in the center. The time is based on a 24 hour clock. After each punch out, the tape will move 1/10th of an inch and will position itself for the next punch out. Since the Recorder is designed to operate at a time determined by the Timer Unit, the data recording tape selected for use must have appropriate time divisions between printed time designations in order to synchronize the operation of the unit with the actual time.

Standard time based recording tape is subdivided into 15 minute increments, and under normal conditions a 410 foot roll will last seventeen months.

VI Telemetering Facilities

As optional equipment to the Punched Tape Recorder, a parallel binary-coded decimal output may be included to present in electrical form, by means of sixteen contact closures, the same value that appears on the data recording tape for telemetering to remote equipment.

A contact board assembly mounted between the punch arm assembly and the code disks, terminates at a terminal block within the instrument. Each one of the punches is associated with an electrical contact that closes for each hole that is punched in the tape. The electrical output from the contacts is brought out to a terminal board having reference designations to aid in further interconnection to an F&P Telemetering Transmitter for transmission to a remote area.

SERVICING AND ALIGNMENT

I General

The Series 1540 Punched Tape Recorder is relatively maintenance free. The instrument is aligned, calibrated, and locked in position at the factory; no adjustments are necessary. Do not attempt to make any adjustment to the code disks unless it is definite that the instrument is functioning improperly as may be evidenced by false output readings. Errors in coding may be a result of worn or broken code hills on the disk; replacement disks are available from the factory.

In the event that any part of the mechanical cams, gears or linkages become worn or broken, the instrument will have to be disassembled as far as necessary to replace the worn or broken parts. Disassembly is relatively simple and does not require special tools. Under no conditions should parts be replaced unless a thorough knowledge of the operating principles have first been inculcated. Reference to the illustrations and text in this Bulletin as well as the exploded drawings in the Parts List Bulletin will prove helpful in locating adjustment points and in disassembly procedures. If parts are replaced it may be important to assure alignment as discussed in the following paragraphs.

II Alignment Procedures

Reference to the illustrations in this Bulletin wil1 prove helpful in locating adjustment points. The alignment criteria pertaining to the instrument subassemblies are as follows:

1. Low Order Code Disk Screw Support

Adjust and tighten the support screw (located to the rear of the punch arm assembly), allowing .005" maximum clearance between the screw head and the low order code disk through full 360 degree rotation.

2. High Order Code Disk

Adjust and tighten the collar mounted on the front hub of the high order code disk, allowing .003” end play: the code disk must rotate freely.

3. Locking Lever

By means of the locking lever, lock the low order code disk at zero. Adjust the locking lever stop to allow .005” minimum clearance between the locking lever stop and the locking lever tang; tighten. With the motor switch cam in the “off” position, the locking lever heel should be approximately 1/32" above the detent wheel.

SERVICING AND ALIGNMENT (Continued)

4. Programming Cam Shaft

The molded witness marks (.030″ wide x .015″ high) on the nylon cams (code disk locking, punch actuating and paper tape advancement) must be in line with each other and offset 60° clockwise with the hex cam shaft pin (looking at the motor end). The stamped mark on the motor switch cam must be offset 60° counterclockwise with the programming cams (looking at the motor end). Allow approximately 1/32″ total end play between the stacked cam assembly and the bearing blocks. The programming cam shaft must rotate freely.

5. Paper Tape Advancement Lever

Initiate punch out several times to ascertain that the punched holes appear exactly on the horizontal time grid line of the data recording tape. If the punched holes are slightly below the horizontal line the paper tape advancement lever must be shortened; conversely if the punched holes are slightly above the line, the advancement lever must be lengthened. Loosen the two screws that fasten the upper and lower sections of the lever together and adjust the length accordingly; retighten the screws.

6. Motor Switch Cam

Rotate the cam shaft until the leaf switch falls into the cam valley; shut off power. Depress the switch until it "clicks"; allow it to return until the switch "clicks" again. The distance between the switch and the cam should be approximately 1/32 inch. Re-apply power.

Advance the cam shaft until the high position of the cam shuts off the motor. Re-energize the motor with the timer and note that the switch moves downward approximately 1/32 inch. If these conditions are not met, adjust the switch.

7. Punch Arm Assembly

Center the punch arm (square opening) evenly between the stripper plate; adjust and tighten the bearing blocks (at the tape drive sprocket) to allow approximately .0l0″ end play. The punch arm must pivot freely and the sprocket must rotate the full 360 degrees using upward finger pressure. Make sure that the punches are striking the center of the code disk bits (with stripper plate removed).

8. Punch Stripper Plate

With the punch arm vertical (against the stop) and the punches completely withdrawn, slide the stripper plate down approximately .005″ from the milled flat on the punches and tighten. Check that all punches are captured between the milled cut out. Be sure that the stripper plate is not being forced or bent by the punches.

9. Punch Arm Roller

Pull the punch arm assembly forward as far as possible (punches shall touch the rear of the stripper plate); hold in this position and slide the punch arm roller bracket assembly against the high lobe on the punch arm actuating cam; then back off 1/32″ and tighten. Check for this 1/32″ clearance with the lowest part of the cam toward the roller.

10. Punching Pressure

Lock the code disks at 7777 reading. Gradually adjust the spring pressure (by means of the screw on the front face and the locking nut on the rear of the punch arm), until the punch pierces cleanly through the paper tape; tighten 1-½ turns further.

FISCHER & PORTER CO.
WARMINSTER, PENNSYLVANIA, U.S.A.

Telemetering

PARTS LIST

for

PUNCHED TAPE RECORDERS

INCLUDES

SERIES 1542 LEVEL RECORDER
SERIES 1544 TRAFFIC COUNTER
SERIES 1546 TRAFFIC COUNTER

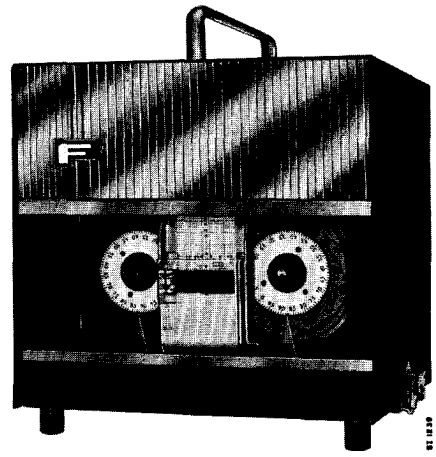

MODEL 1542 & 1544 RECORDER

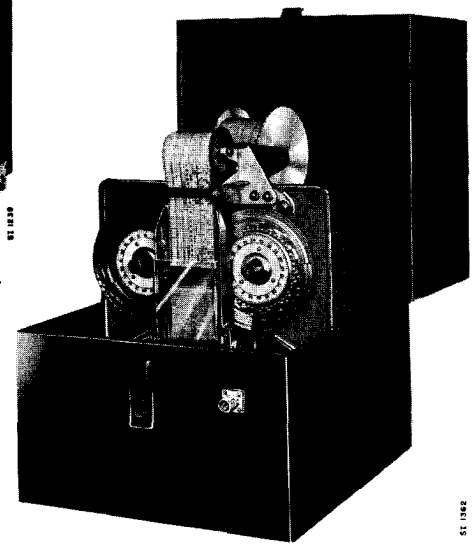

MODEL 1546 RECORDER

FISCHER & PORTER CO.
WARMINSTER, PENNSYLVANIA, U.S.A.

INTRODUCTION

This Parts List concerns certain of the models comprising the Series 1540 Punched Tape Recorder. These models employ the same basic mechanism and differ only in the application, type of case, time base and power requirements specified, and for special operating features. Detailed explanation of the model numbering system follows:

Model No. 1540 A A O O

Punched Tape Recorders

Application
- 42 = Liquid Level
- 44 = Traffic Counter, AC Powered
- 46 = Traffic Counter, DC Powered

Count Ratio
- A = W/O Special Options
- B = 10 Pulses = 1 Code Disk Count
- C = 20 Pulses = 1 Code Disk Count
- D = 0.01 Foot = 1 Code Disk Count
- E = 0.1 Inch = 1 Code Disk Count
- F = 1 Pulse = 1 Code Disk Count
- G = 2 Pulses = 1 Code Disk Count

Telemetering
- A = W/O Telemeter Facilities
- D = W/ Telemeter Facilities

Recording
- 0 = W/O Tape Punch (Telemeter Only)
- 1 = W/ Tape Punch Recording

Timer
- 0 = W/O Timer
- 1 = 15 Minute Timer
- 2 = 30 Minute Timer
- 3 = 60 Minute Timer
- 4 = 5 Minute Timer
- 5 = 12 Hour Timer
- 6 = 6 Minute Timer

The parts specified herein are applicable to the following model numbered instruments.

1542 Punched Tape Level Recorder
1544 Punched Tape Traffic Counter Recorder
1546 Punched Tape Traffic Counter Recorder

RECOMMENDED SPARE PARTS

Please note that various items on the parts lists are prefixed with an asterisk (*). This is an indication that each part so noted is recommended by Fischer & Porter Co. as a "stand-by" part for prevention of costly shut-down. Such parts are so designated after careful consideration of actual part replacement orders over long periods of time, plus rugged usage tests in our own laboratories. Complete modular subassemblies have been built to facilitate replacement. It is recommended that your purchase order for these items be placed as soon as your equipment is ready for operation.

IMPORTANT NOTE

When Ordering Parts Or Communicating With Us Regarding This Equipment, Please Refer To The Fischer & Porter Model Number And/Or Serial Number.

PARTS LIST

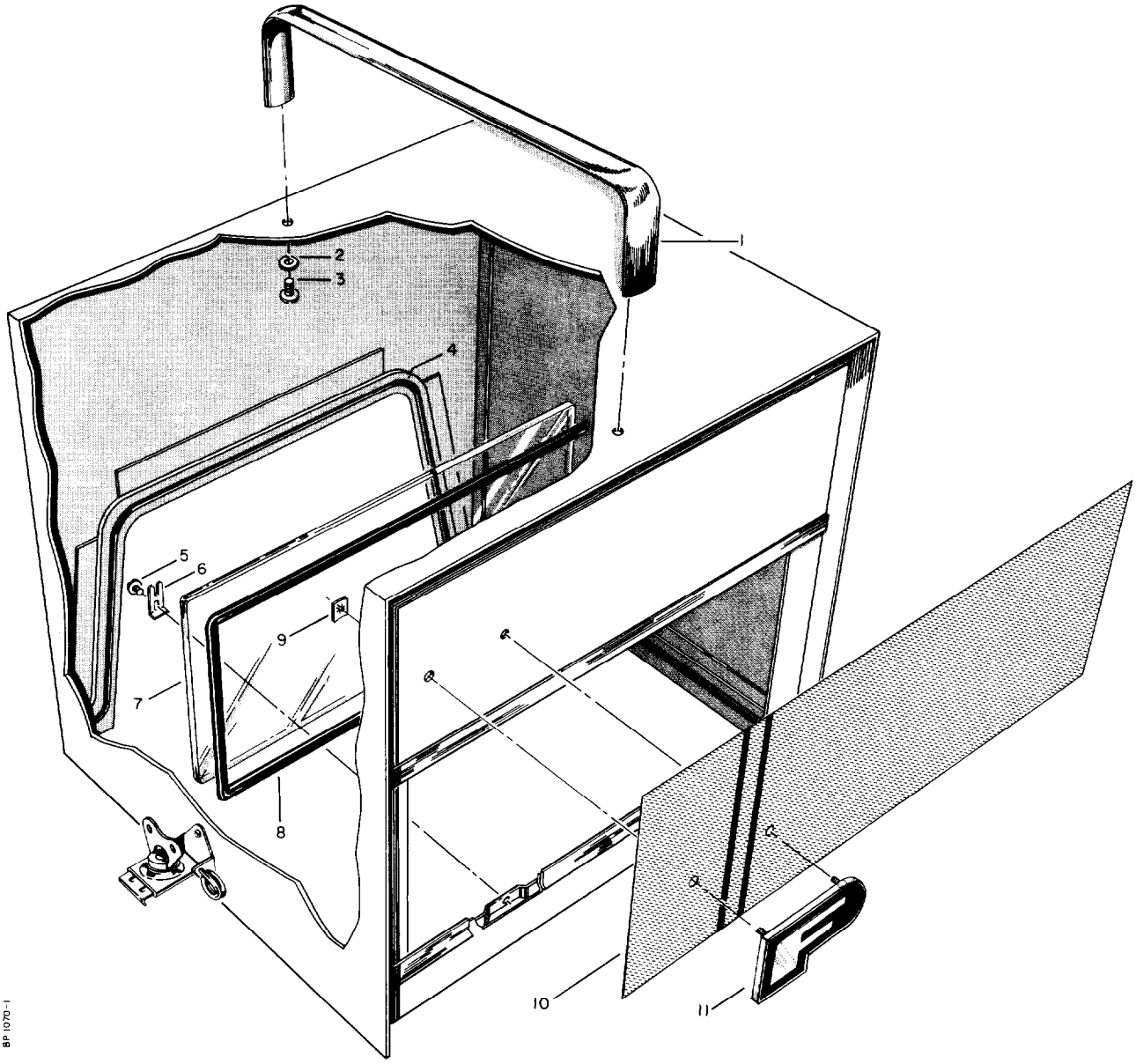

STANDARD CASE ASSEMBLY

SERIES 1542 & 1544

KEY	QUANTITY	PART DESCRIPTION	PART NUMBER
	1	COMPLETE ASSEMBLY	612A176X99
1	1	HANDLE	124D025
2	2	WASHER, Lock #10	085D010S31
3	2	SCREW, Bind Hd #10-32 x 1/2"	006L008T30
4	1	PACKING, Strip Rubber	116A001
5	6	SCREW, Bind Hd #6-32 x 3/16"	006H003T30
6	6	CLIP, Window Retaining	390A004
7	1	*WINDOW	332A060
8	1	*GASKET, Window	333EO73
9	2	NUT, Speed	106D009
10	1	PLATE, Face	324A145
11	1	MONOGRAM	338A031

*INDICATES RECOMMENDED SPARE PARTS

REF. : BM-35-1012

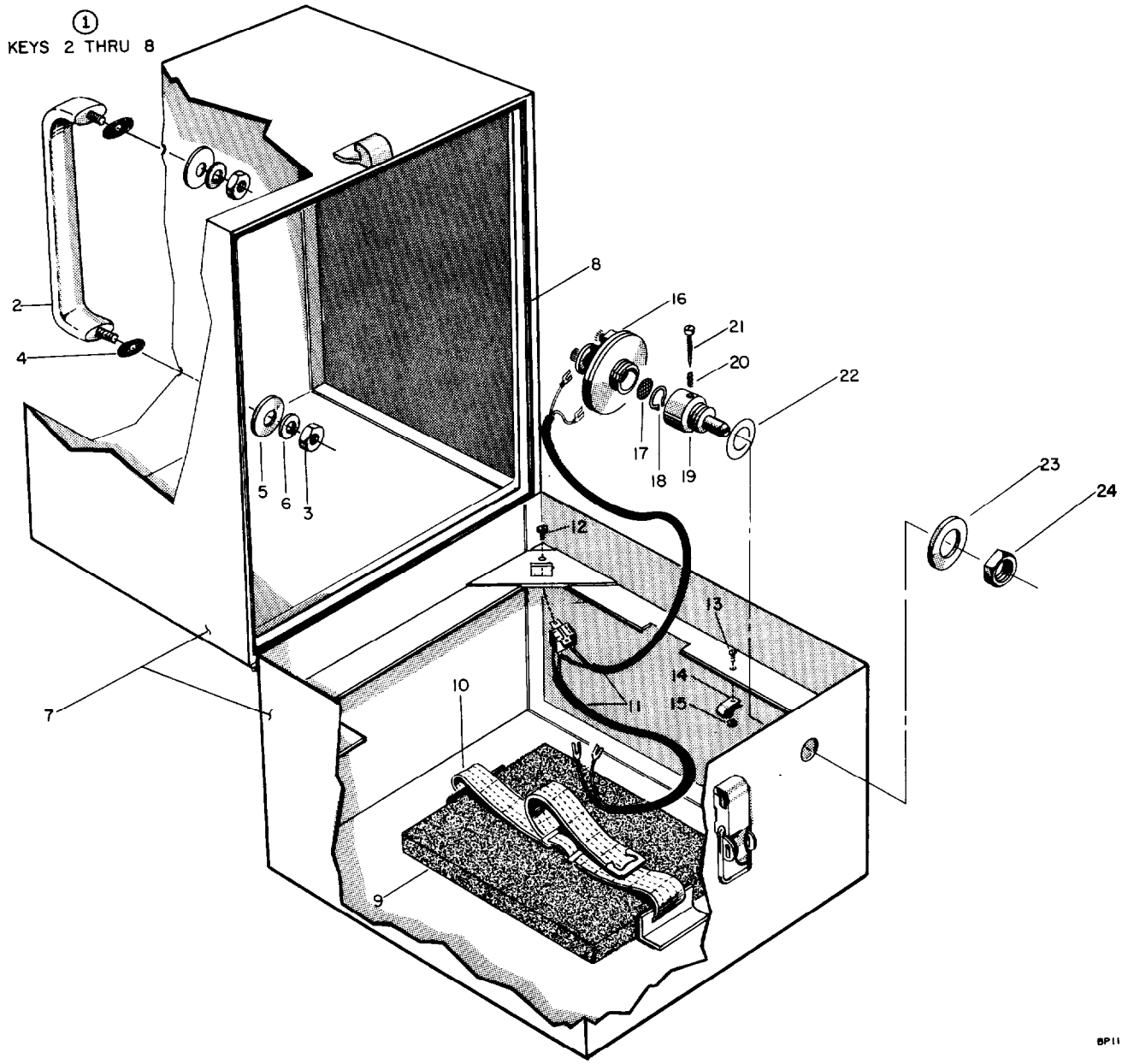
1
KEYS 2 THRU 8
2
4
5
6
3
7
8
9
10
11
12
13
14
15
16
17
18
19
20
21
22
23
24
8P11

WEATHER-PROOF CASE ASSEMBLY

SERIES 1546

KEY	QUANTITY	PART DESCRIPTION	PART NUMBER
1	1	CASE ASSEMBLY - SEE NOTE 1	612A533X99
2	1	HANDLE: w/1/2-20 Hex Nuts	124D030
3	2	NUT, Hex l/2-20	081J203
4	2	GASKET	333N232
5	2	WASHER, Plain l/2"	085A816T30
6	2	WASHER, Lock l/2"	085D816S31
7	1	CASE	612P102
8	1	"GASKET	116A00l
9	1	CUSHION, Battery	354D123Ql0
10	1	STRAP, Battery	117F00l
11	1	CABLE ASSEMBLY	677A577X99
12	2	SCREW, Bind Hd #4-40 x 3/16"	006F003Tl0
13	1	SCREW, Bind Hd #6-32 x 5/16"	006H005Tl0
14	1	CLAMP, Cable	108A002
15	1	NUT, Hex #6-32	080H200Tl0
16	1	*DIAPHRAGM ASSEMBLY	119A007
17	1	SCREEN	350A00lTl0
18	1	RING, Retaining	106Bl0l
19	1	HOUSING, Needle Valve	365A087Bll
20	1	SPRING, Needle Valve	424 A026T12
21	1	NEEDLE, Valve	396G074B11
22	1	*GASKET	333C250Q20
23	1	WASHER, Plain 5/8"	085A058Tl0
24	1	NUT, Hex 5/8-11	081M203Tl0

"INDICATES RECOMMENDED SPARE PARTS

NOTE 1. Specify Paint Color, Otherwise Black Case Will Be Furnished.

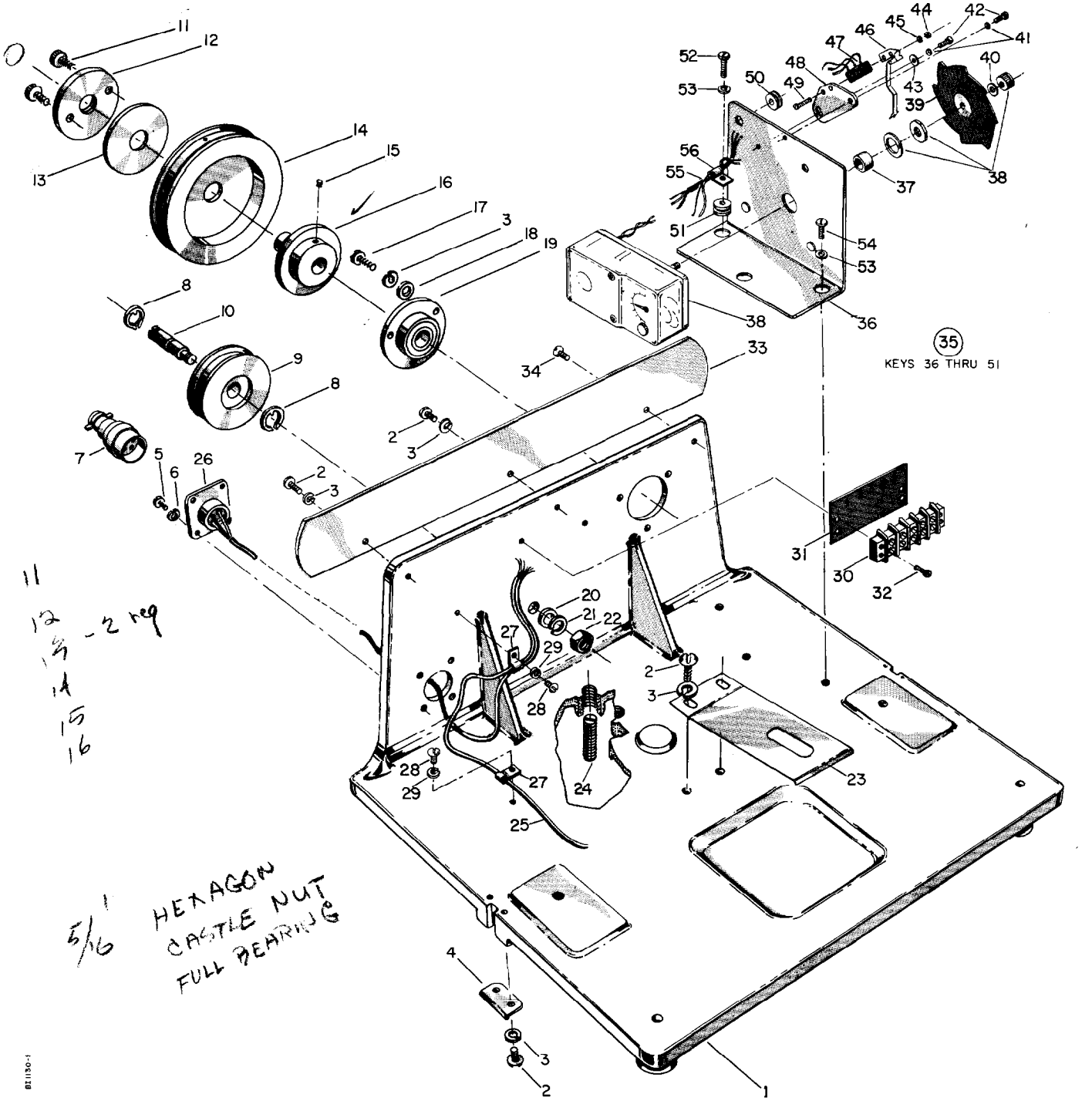

BASE ASSEMBLY STANDARD CASE

SERIES 1542

KEY	QUANTITY	PART DESCRIPTION		PART NUMBER
1	1	BASE	w/o Telemetering	355A162
			w/Telemetering	355A182
2	8	SCREW, Bind Hd #l0-32 x 3/8"		006L006T30
3	11	WASHER, Lock #10		085D0l0S31
4	2	KEEPER, Latch		353B325
5	4	SCREW, Fill Hd #4-40 x 3/8"		004F006T30
6	4	WASHER, Lock #4		085D004T30
7	1	CONNECTOR		172F240U01
8	2	RING, Retaining		106Alll
9	1	PULLEY, Idler		655A512
10	1	SHAFT, Pulley		395D024
11	2	SCREW, Thumb #10-32 x 13/16"		396B019
12	1	FLANGE		363B075
13	1	WASHER, Flat		377B002

BASE ASSEMBLY (Continued)

KEY	QUANTITY	PART DESCRIPTION		PART NUMBER
14	1	DRIVE PULLEY ASSEMBLY		655A511
15	2	SET SCREW, Hex Hole #l0-32 x 5/16"		019L005S31
16	1	HUB		371D079
17	3	SCREW, Fill Hd #l0-32 x 3/8"		004L006T30
18	3	WASHER, Plain #10		085A0l0T30
19	1	BEARING ASSEMBLY		634A116
20	1	WASHER, Plain l/4"		085A416T30
21	1	WASHER, Lock l/4"		085D416S31
22	1	NUT, Hex l/4-20		081B200T30
23	1	SPRING, Tape Retainer		424F017
24	1	SCREW, Slotted Set 3/8-16 x l-1/2"		047F148S30
25	1	WIRING HARNESS - Key 30 To Front Plate Terminal Board		677A594
26	1	WIRING HARNESS - Key 7 To Key 30		677A598
27	3	CLAMP, Cable		108A003
28	2	SCREW, Bind Hd #6-32 x l/4"		006H004T30
29	2	WASHER, Lock #6		085D006S31
30	1	TERMINAL BOARD		17lF005
31	1	MARKER STRIP		358D021
32	2	SCREW, Fill Hd		004H007T30
33	1	STRIP, Case Guide		405B055
34	1	SCREW, Flat Hd #l0-32 x 3/8"		002L006T30
35	1	TIMER UNIT (When Required)	5 Minute Interval	665A214
			6 Minute Interval	665A219
			15 Minute Interval	665A215
			30 Minute Interval	665A218
			60 Minute Interval	665A216
			12 Hour Interval	665A217
36	1	BRACKET		353C549A15
37	1	BUSHING - SEE NOTE 1		368A022
38	1	CLOCK ASSEMBLY		133E022
39	1	CAM ASSEMBLY	5 Minute Interval	637A143
			6 Minute Interval	637A162
			15 Minute Interval	637A141
			30 Minute Interval	637A144
			60 Minute Interval	637A142
			12 Hour Interval	637A128
40	1	WASHER		377A188R60
41	2	WASHER, Lock #4		085D004S31
42	2	SCREW, Fill Hd #4-40 x l/4"		004F004T30
43	1	WASHER, Plain #4		085A004T30
44	2	NUT, Hex #2-56		080D200T30
45	2	WASHER, Lock #2		085F002S31
46	1	*'LEVER ASSEMBLY		647A325X99
47	1	*SWITCH		154E099U02
48	1	PLATE, Switch		355C256A15
49	2	SCREW, Flat Hd #2-56 x l/2"		002D008T30
50	1	GROMMET		104B0l0
51	3	GROMMET		104B008
52	1	SCREW, Bind Hd #6-32 x 5/8"		006H0l0Tl0
53	3	WASHER, Plain #6		085A006Tl0
54	2	SCREW, Bind Hd #6-32 x 7/16"		006H007Tl0
55	1	WIRING HARNESS		677A593
56	1	CLAMP, Cable		108A003

*INDICATES RECOMMENDED SPARE PARTS

NOTE 1. Referenced Item Is Not Used On 12 Hour Interval Timer Unit.

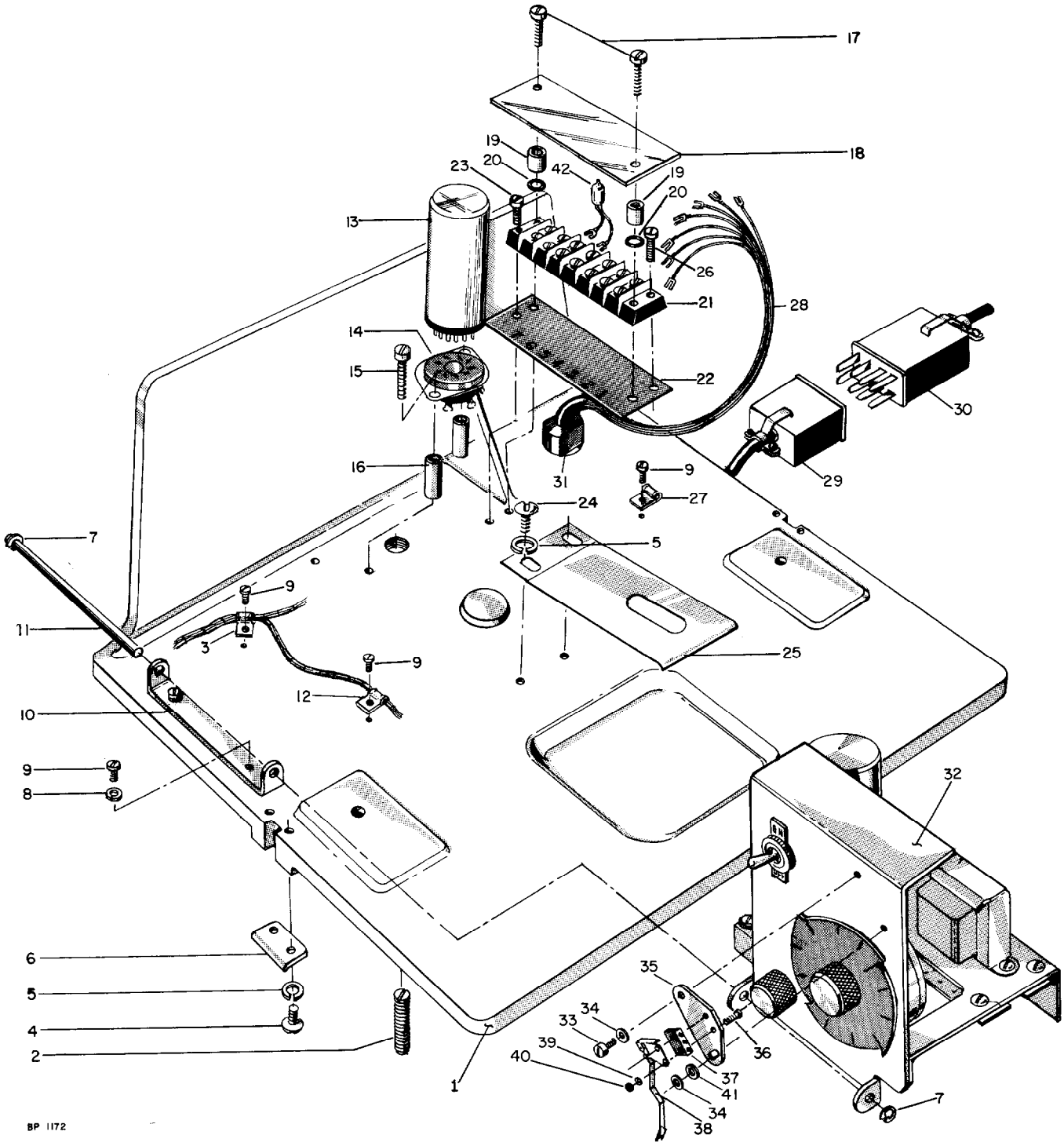
17
18
19
20
23
42
19
20
13
26
21
28
14
15
22
30
16
31
9
29
24
27
7
5
9
11
3
25
9
12
10
9
8
32
6
5
4
2
35
34
33
39
40
36
37
41
34
38
1
7
BP 1172

BASE ASSEMBLY, STANDARD CASE

SERIES 1544

KEY	QUANTITY	PART DESCRIPTION	PART NUMBER
1	1	BASE	355Al20Al0
2	1	SCREW, Slotted Set 3/8-16 x 1-1/2"	047F148S30
3	1	CLAMP, Cable	108A003
4	4	SCREW, Bind Hd #l0-32 x 3/8"	006L006Tl0
5	6	WASHER, Lock #10	085D0l0S32
6	2	KEEPER, Latch	353B325T12
7	2	RING, Retaining	106A304
8	2	WASHER, Lock #6	085D006S32
9	5	SCREW, Bind Hd #6-32 x l/4"	006H004Tl0
10	1	BRACKET	353A251Sll
11	1	SHAFT, Bracket	370C048T30
12	1	CLAMP, Cable	108A002
13	1	*RELAY: Mercury Wetted, 1 Form C	163H119
14	1	CONNECTOR, Receptacle	156E004
15	2	SCREW, Fillister Hd #6-32 x 1-l/4"	004H128Tl0
16	2	SPACER	104D022
17	2	SCREW, Bind Hd #6-32 x 3/4"	006H012Tl0
18	1	COVER	379A2llPl0
19	2	SPACER	104D021
20	2	"O" RING	l0lA701
21	1	TERMINAL BOARD	171F007
22	1	MARKER STRIP	358D151F62
23	1	SCREW, Bind Hd #6-32 x 3/8"	006H0l0Tl0
24	2	SCREW, Bind Hd #l0-32 x l/4"	006L004T10
25	1	SPRING, Tape Retainer	424F017T12
26	1	SCREW, Bind Hd #6-32 x 5/8"	006H0l0Tl0
27	1	CLAMP, Cable	108A004
28	1	CABLE ASSEMBLY	677P109
29	1	CONNECTOR, Receptacle	172B037
30	1	CONNECTOR, Plug	172A037
31	1	GROMMET	104C003
32	1	TIMER UNIT (Also See Page 11)	623A363X99
33	2	SCREW, Bind Hd #4-40 x l/4"	006F004T30
34	2	WASHER, Lock #4	085D004S31
35	1	PLATE, Switch	355C256
36	2	SCREW, Flat Hd #2-56 x l/2"	002D008T30
37	1	*SWITCH	154E099U02
38	1	*LEVER ASSEMBLY	647A325
39	2	WASHER, Lock #2	085F002S31
40	2	NUT, Hex #2-56	080D200T30
41	1	WASHER, Plain #4	085A004T30
42	1	*NEON ASSEMBLY	677A595X99

*INDICATES RECOMMENDED SPARE PARTS

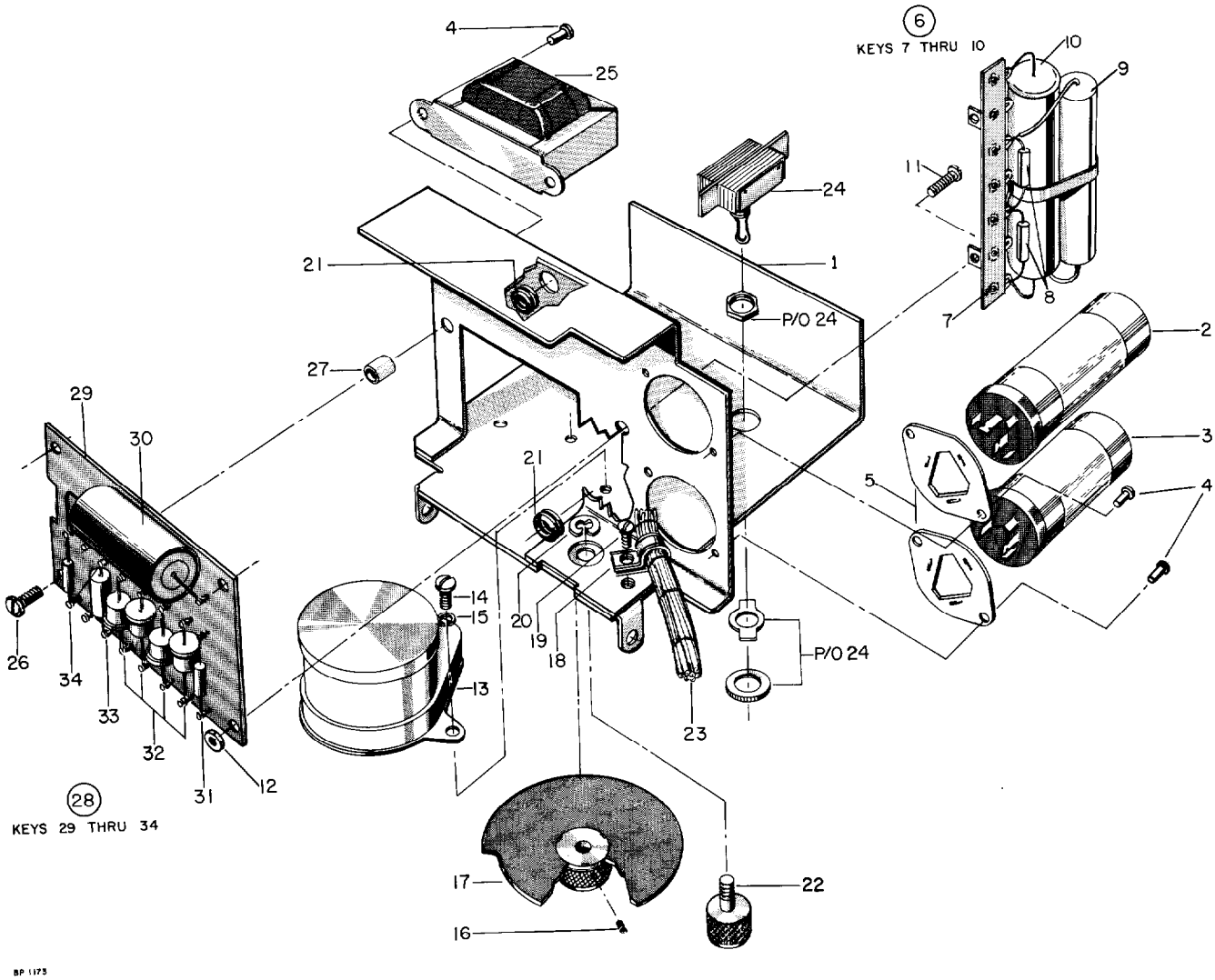
6
KEYS 7 THRU 10
28
KEYS 29 THRU 34
P/O 24
P/O 24
BP 1173

TIMER UNIT

SERIES 1544

KEY	QUANTITY	PART DESCRIPTION	PART NUMBER
1	1	BRACKET	623A518
2	1	*CAPACITOR, Electrolytic: l000/l000 mfd, 15/15 vdc	160E044
3	1	"'CAPACITOR, Electrolytic: 500 mfd, 25 vdc	160E040
4	6	RIVET	107F042
5	2	RECEPTACLE, Capacitor	160E036
6	1	TERMINAL STRIP ASSEMBLY	677A599
7	1	TERMINAL BOARD	171D016
8	2	RESISTOR, Composition: 200a + 5%, 1/2w	161A201
9	1	CAPACITOR, Paper: 0.25 mfd, 400 vdc	160B404
10	1	CAPACITOR, Paper: 0.5 mfd, 400 vdc	160B406
11	2	SCREW, Truss Hd #6-32 x l/2"	005H008T30
12	2	NUT, Hex #6-32	080H200T30
13	1	*MOTOR, Timer	165A177
14	2	SCREW, Bind Hd #6-32 x 3/16"	006H003T30
15	2	WASHER, Lock #6	085D006S31
16	1	SET SCREW, Hex Hole #4-40 x l/4"	019F004S31
17	1	KNOB & DIAL ASSEMBLY: 5 Minute Interval	660A112
		6 Minute Interval	660A137
		15 Minute Interval	660A110
		30 Minute Interval	660A113
		60 Minute Interval	660A111
18	1	CLAMP, Cable	108A003
19	1	SCREW, Truss Hd #6-32 x l/4"	005H004T30
20	1	RING, Retaining	106A106
21	2	GROMMET	104B013
22	1	SCREW, Latching	411A068
23	1	WIRING HARNESS	677A230
24	1	*SWITCH, Toggle	154B016
25	1	*TRANSFORMER, Filament: 117V/6.3VCT	164F008
26	2	SCREW, Truss Hd #6-32 x 3/8"	005H006T30
27	4	SPACER	104D021
28	1	*COMPONENT BOARD ASSEMBLY	696A012
29	1	BOARD & LUG ASSEMBLY	625A727
30	1	CAPACITOR, Paper: 4 mfd, 50 vdc	160D004
31	1	RESISTOR, Composition: 3.3a + l0%, 1/2w	161P107
32	4	DIODE, Silicon: Type SC2	166B078
33	1	RESISTOR, Composition: 2.72f l0%, 1/2w	161P106
34	1	RESISTOR, Composition: 22ti l0%, 1/2w	161B220

*INDICATES RECOMMENDED SPARE PARTS

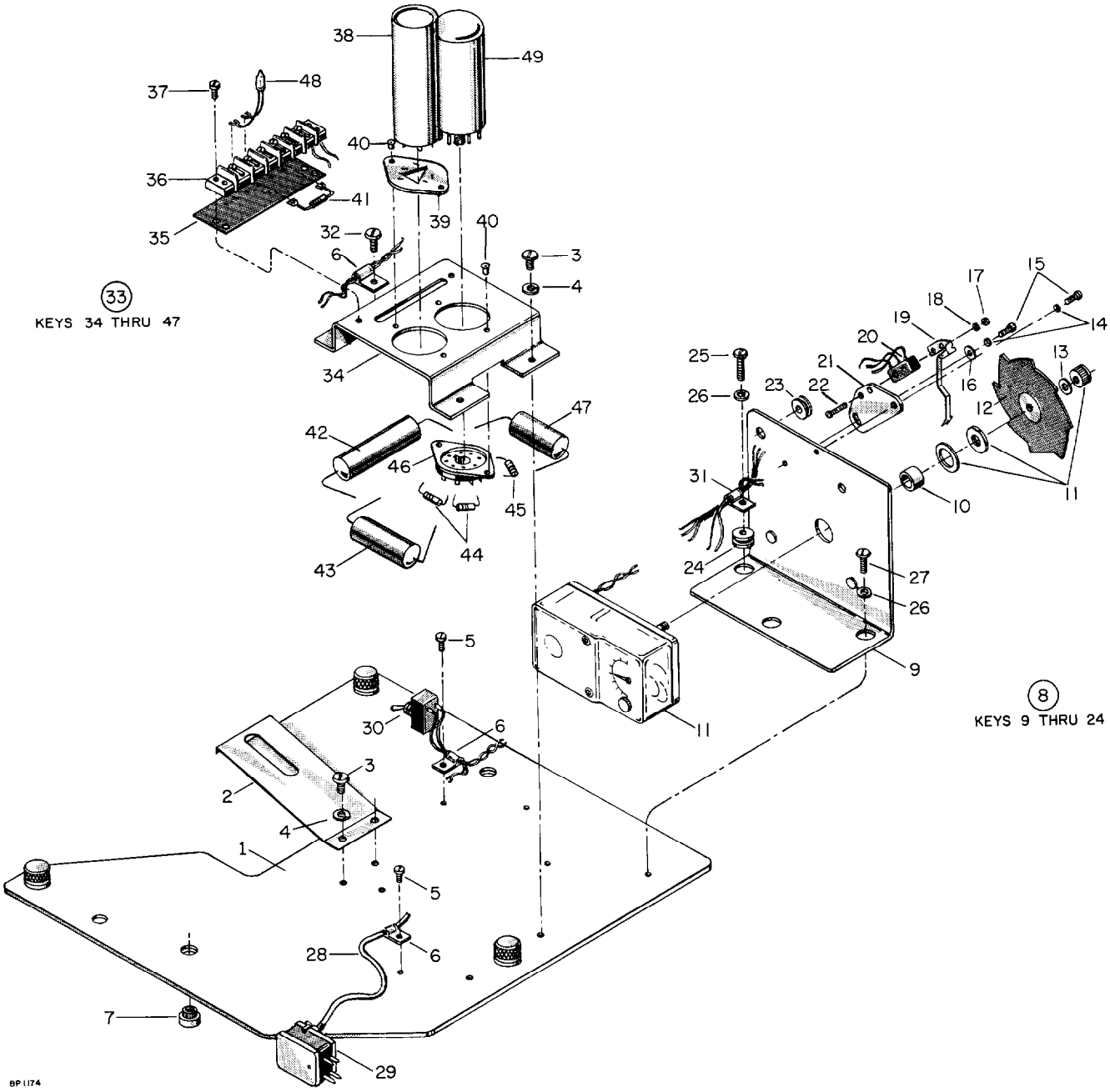
38
49
37
48
40
36
41
39
40
35
32
6
3
4
33
KEYS 34 THRU 47
34
47
42
46
45
44
43
25
26
23
22
21
20
19
18
17
15
14
13
16
12
11
10
31
24
27
26
9
8
KEYS 9 THRU 24
5
30
6
3
2
4
1
5
28
6
7
29
BP 1174

PARTS LIST

BASE ASSEMBLY WEATHER-PROOF CASE

SERIES 1546

KEY	QUANTITY	PART DESCRIPTION		PART NUMBER
1	1	PLATE, Mounting		612A375X99
2	1	SPRING, Tape Retainer		424F017T12
3	4	SCREW, Bind Hd #l0-32 x l/4'		006L004T30
4	4	WASHER, Lock #10		085D0l0T30
5	2	SCREW, Bind Hd #6-32 x 5/16"		006H005T30
6	3	CLAMP, Cable		108A002
7	2	NUT, Special l/4-20		093B003
8	1	TIMER UNIT	5 Minute Interval	665A214
			6 Minute Interval	665A219
			15 Minute Interval	665A215
			30 Minute Interval	465A218
			60 Minute Interval	465A216
			12 Hour Interval	665A217
9	1	BRACKET		353C549A15
10	1	BUSHING - SEE NOTE 1		368A022
11	1	CLOCK ASSEMBLY		133E022
12	1	CAM ASSEMBLY	5 Minute Interval	637A143
			6 Minute Interval	637A162
			15 Minute Interval	637A141
			30 Minute Interval	637A144
			60 Minute Interval	637A142
			12 Hour Interval	637A128
13	1	WASHER		377A188R60
14	2	WASHER, Lock #4		085D004S31
15	2	SCREW, Fill Hd #4-40 x l/4"		004F004T30
16	1	WASHER, Plain #4		085A004T30
17	2	NUT, Hex #2-56		080D200T30
18	2	WASHER, Lock #2		085F002S31
19	1	*LEVER ASSEMBLY		647A325X99
20	1	*SWITCH		154E099U02
21	1	PLATE, Switch		355C256A15
22	2	SCREW, Flat Hd #2-56 x l/2"		002D008T30
23	1	GROMMET		104B0l0
24	3	GROMMET		104B008
25	1	SCREW, Bind Hd #6-32 x 5/8"		006H0l0Tl0
26	3	WASHER, Plain #6		085A006Tl0
27	2	SCREW, Bind Hd #6-32 x 8/16"		006H007Tl0
28	1	WIRING HARNESS		677A759
29	1	CONNECTOR		172F151
30	1	'SWITCH, Toggle		154B016
31	1	CLAMP, Cable		108A003
32	1	SCREW, Bind Hd #l0-32 x 3/8"		006L006T10
33	1	ELECTRONIC BRACKET ASSEMBLY		623A252X99
34	1	BRACKET		353A263
35	1	MARKER STRIP		358Dll3
36	1	TERMINAL BOARD		171G006
37	2	SCREW, Fill Hd #6-32 x 3/8"		004H006T30
38	1	*CAPACITOR, Electrolytic: 1000 mfd, 25 vdc		160E059
39	1	RECEPTACLE, Capacitor		160E036
40	4	RIVET		107F042
41	1	*RESISTOR, Composition: 3.3 Ω ± l0% 1/2w		677A576
42	1	CAPACITOR, Paper: 0.5 mfd, 400 vdc		160B406
43	1	CAPACITOR, Paper: 0.25 mfd, 400 vdc		160B404
44	2	RESISTOR, Composition: 200Ω 5%, 1/2W		161A201
45	1	RESISTOR, Composition: 22Ω ± l0%, 1/2W		161B220
46	1	RECEPTACLE, Relay		156E004
47	1	CAPACITOR, Paper: 4 mfd, 50 vdc		160D004
48	1	*NEON ASSEMBLY		677A595X99
49	1	*RELAY, Mercury Wetted: 1 Form C		163H119

*INDICATES RECOMMENDED SPARE PARTS

NOTE 1. Referenced Item Is Not Used On 12 Hour Interval Timer Unit.

PARTS LIST

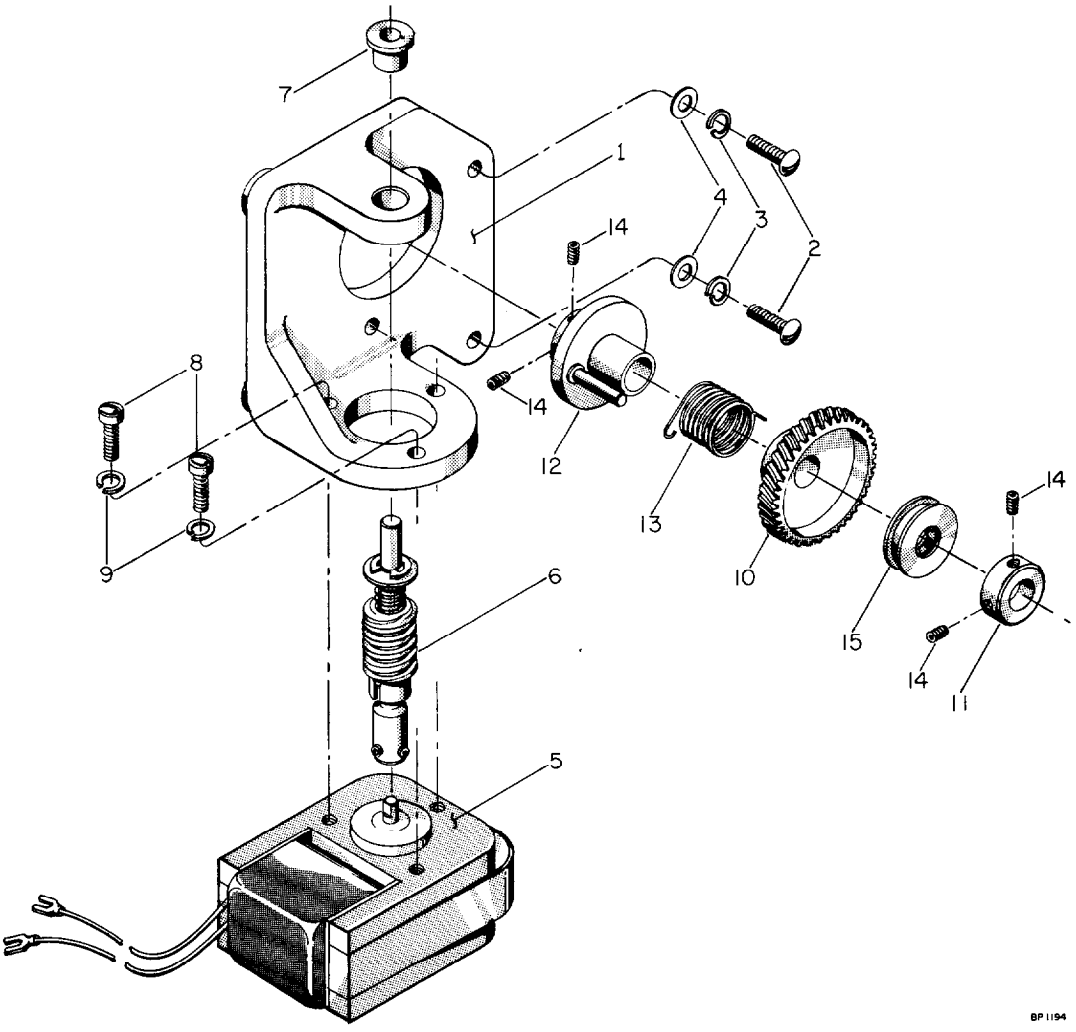

STEPPING MOTOR & WORM SHAFT ASSEMBLY

SERIES 1544 & 1546

1:1 Gear Ratio - Part No. 623A585X99
2:l Gear Ratio - Part No. 623A586X99

KEY	QUANTITY	PART DESCRIPTION		PART NUMBER
1	1	BRACKET		353B857A18
2	3	SCREW, Truss Hd #6-32 x 5/8"		005H010T10
3	3	WASHER, Lock #6		085D006S32
4	3	WASHER, Plain #6		085A006S32
5	1	STEPPING MOTOR ASSEMBLY		669A117X99
6	1	WORM SHAFT ASSEMBLY	1:l Ratio	635A242X99
			2:l Ratio	635A241X99
7	1	*BEARING		103J049U01
8	3	SCREW, Fill Hd #6-32 x l/2"		004H008T10
9	3	WASHER, Lock #6		085D006S32
10	1	WHEEL, Worm	1:1 Ratio	659A530X99
			2.1 Ratio	659A529X99
11	1	COLLAR		371C025T30
12	1	COLLAR & PIN ASSEMBLY		637A168T30
13	1	SPRING		424C053T60
14	4	SET SCREW, Hex Soc #6-32 x 3/16"		019H003S32
15	1	WASHER. Thrust		103F005

*INDICATES RECOMMENDED SPARE PARTS

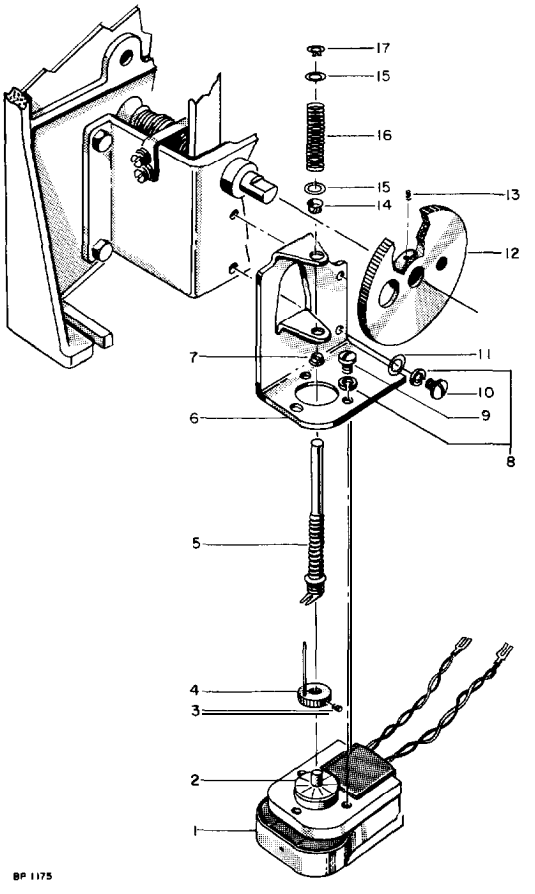

STEPPING MOTOR & WORM SHAFT ASSEMBLY

SERIES 1544 & 1546

10:1 Gear Ratio - Part No. 623A312X99
20:1 Gear Ratio - Part No. 623A311X99

KEY	QUANTITY	PART DESCRIPTION		PART NUMBER
1	1	*STEPPING MOTOR ASSEMBLY		669A117
2	1	DIAL		335C162
3	1	SET SCREW, Hex Soc #4-40 x 3/16"		090F009S10
4	1	HUB ASSEMBLY		637A127
5	1	WORM SHAFT ASSEMBLY	10:1 Ratio	659A315
			20:1 Ratio	659A316
6	1	BRACKET		353A243
7	1	BEARING, Nylon		103J038
8	5	WASHER, Lock #6		085D006S32
9	3	SCREW, Bind Hd #6-32 x 5/16"		006H005T30
10	2	SCREW, Fill Hd #6-32 x 3/8"		004H006T10
11	2	WASHER, Plain #6		085A006T10
12	1	WHEEL, Worm	10:1 Ratio	4226018B53
			20:1 Ratio	422G019B53
13	1	SET SCREW, Hex Hole #6-32 x 1/8"		019H002S32
14	1	*BEARING, Nylon		103J037
15	2	WASHER, Flat		377A057
16	1	SPRING		424A198
17	1	RING, Retaining		106D026

*INDICATES RECOMMENDED SPARE PARTS

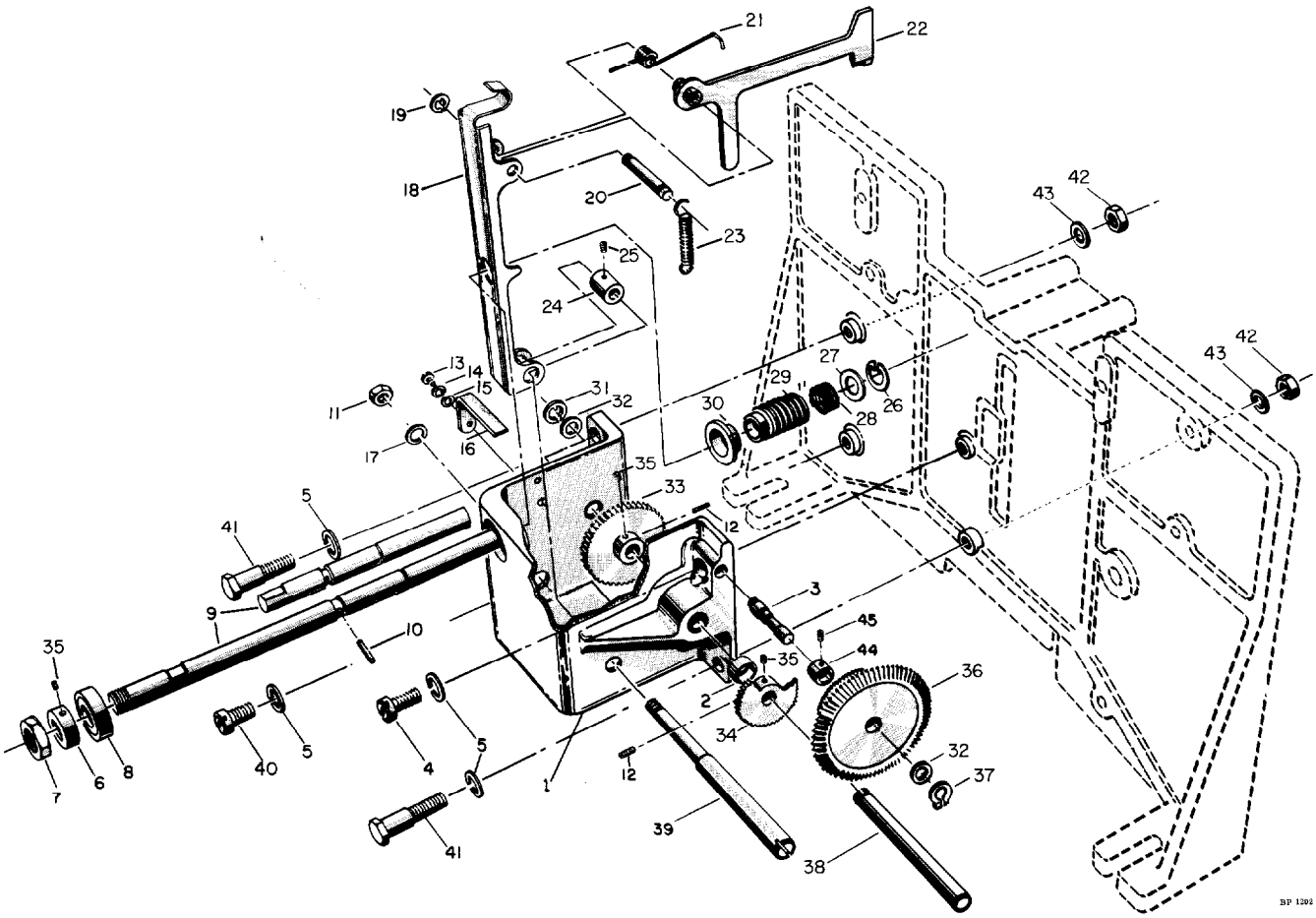
21
22
19
18
20
23
25
24
43
42
43
42
13
14
15
11
16
17
31
32
30
29
27
26
28
35
33
5
41
12
9
10
3
45
44
35
36
35
2
34
32
37
7
6
8
40
5
4
5
1
12
39
41
38
BP 1202

INPUT & GEARING ASSEMBLY

SERIES 1542, 1544 & 1546

KEY	QUANTITY	PART DESCRIPTION		PART NUMBER
1	1	BRACKET ASSEMBLY	Series 1542	623A314
	1		Series 1544 & 1546 10:1 & 20:1 Ratio	623A315
	1		Series 1544 & 1546 1:1 & 2:1 Ratio	623A318
2	2	SLEEVE, Bearing		103J015
3	1	SHAFT, Bevel Gear		370E031
4	1	SCREW, Fill Hd #10-32 x 1"		004L016T10
5	4	WASHER, Lock #10		085D010S32
6	1	COLLAR, Locking		371C025T30
7	1	NUT, Hex 5/16-24	Series 1542 Only	093C001T30
8	1	*BEARING		103C016U01
9	1	SHAFT, Input: 10-1/2"	Series 1542	370E064
	1	5-7/8"	Series 1544 & 1546 10:1 & 20:1 Ratio	370E063
	1	6-3/8"	Series 1544 & 1546 1:1 & 2:1 Ratio	370E082T30
10	1	PIN, Groove		107B025
11	1	NUT, Hex 1/4-20		081B300T10
12	2	PIN, Groove		107A004
13	2	SCREW, Fill Hd #6-32 x 1/4"		004H004T10
14	2	WASHER, Lock #6		085D006S31
15	2	WASHER, Plain #6		085A006T30
16	1	STOP, Locking Lever		353B266T21
17	1	WASHER, Lock 1/4"		085D416S31
18	1	ARM, Rocker		400C033T10
19	1	RING, Retaining		106A115
20	1	SHAFT, Rocker Arm Roller		370D079
21	1	SPRING, Torsion		424C024S13
22	1	LOCKING LEVER ASSEMBLY		647A343X99
23	1	SPRING, Tension		424B026S13
24	1	ROLLER, Guide		371D071B10
25	1	SET SCREW, Hex Hole #4-40 x 1/8"		019F002S31
26	1	RING, Retaining		106A111
27	1	WASHER, Flat		377A144T21
28	1	SPRING, Compression		424A222T10
29	1	GEAR, Worm		422G010T30
30	1	COLLAR		371C017N31
31	1	RING, Retaining		106A109
32	2	WASHER, Flat		377A120N31
33	1	WHEEL, Worm		422G021B10
34	1	GEAR, Pinion		422A237B11
35	4	SET SCREW, Hex Hole #6-32 x 1/8"		019H002S32
36	1	GEAR, Bevel & Spur		422D006B10
37	1	RING, Retaining		106A308
38	1	SHAFT, Transverse		370D127T30
39	1	SHAFT, Tape Guide		370E052T30
40	1	SCREW, Fill Hd #10-32 x 5/8"		004L010T10
41	2	SCREW, Shoulder		396D026T30
42	2	NUT, Hex #10-32		080L200T30
43	2	WASHER, Plain #10		085A010T10
44	1	COLLAR		371C042A10
45	1	SET SCREW, Fluted Hole #2-56 x 1/8"		020D002S31

*INDICATES RECOMMENDED SPARE PARTS

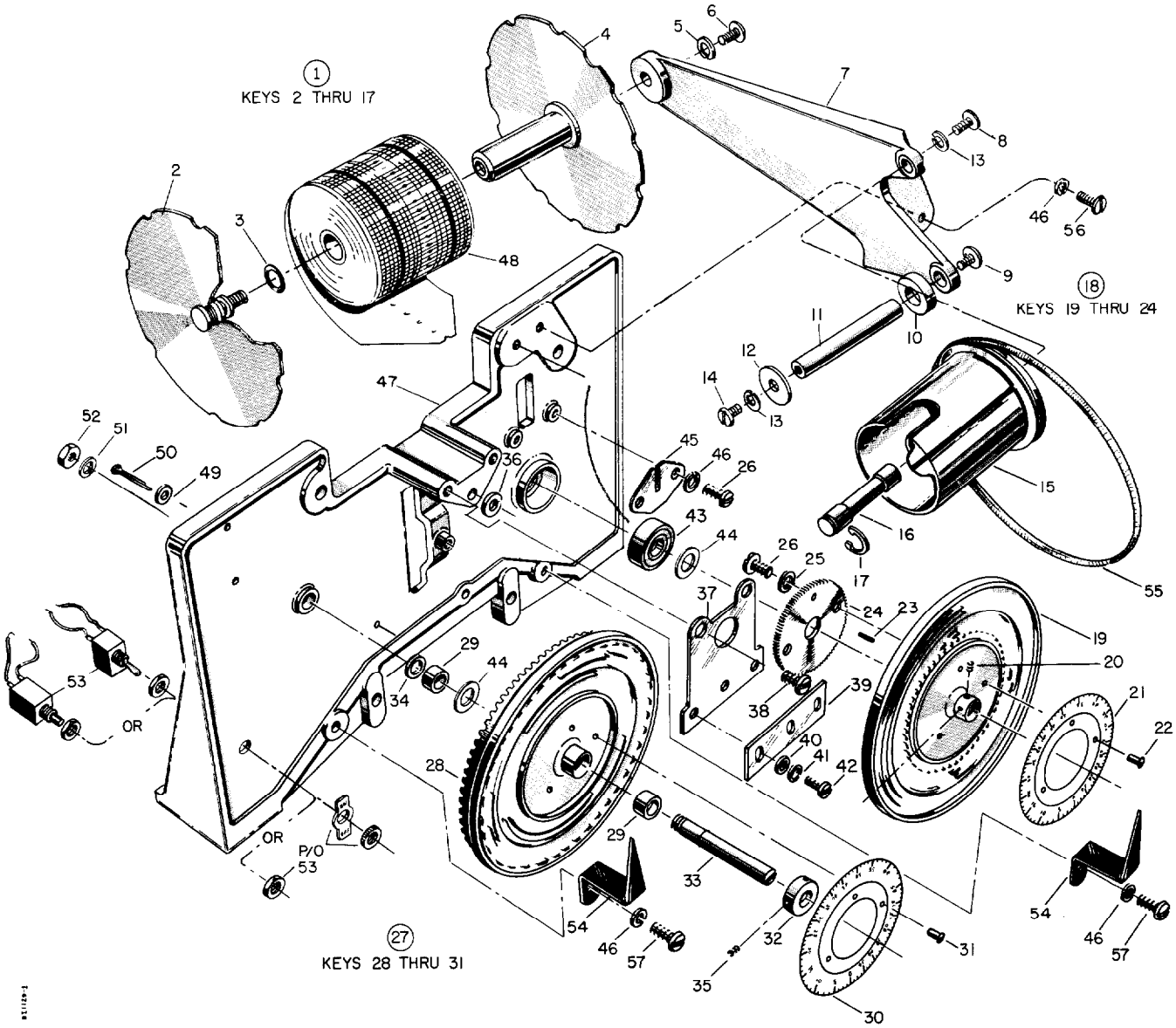

FRONT PLATE ASSEMBLY

SERIES 1542, 1544 & 1546

KEY	QUANTITY	PART DESCRIPTION	PART NUMBER
1	1	TAPE BRACKET ASSEMBLY	623A244X99
2	1	MALE SPOOL END ASSEMBLY	655A995
3	1	*"O" RING	107A705
4	1	FEMALE SPOOL END ASSEMBLY	655A994
5	1	WASHER, Lock 1/4"	085H416S31
6	1	SCREW, Truss Hd 1/4-28 x 5/8"	035A010T30
7	1	BRACKET	353B351
8	1	SCREW, Bind Hd #10-32 x 5/8"	006L010T30
9	1	SCREW, Truss Hd 1/4-20 x 5/8"	035B010T30
10	1	SPACER	371B152
11	1	GUIDE, Tape	402E043
12	1	WASHER, Flat	377A251
13	2	WASHER, Lock #10	085H010S32
14	1	SCREW, Bind Hd #10-32 x 1/4"	006L004T10
15	1	SPOOL, Take-Up	413C275
16	1	SHAFT, Spool	370E028
17	1	RING, Retaining	106D014

FRONT PLATE ASSEMBLY (Continued)

KEY	QUANTITY	PART DESCRIPTION	PART NUMBER
18	1	CODE DISK ASSEMBLY, Low Order	625A065X99
19	1	DISK, Code	355F139Zl0
20	2	SET SCREW, Hex Hole #8-32 x 3/16”	019K003S31
21	1	SCALE, Dial	335C068Al0
22	3	PIN, Drive	107G035
23	1	PIN, Groove	107B027
24	1	WHEEL, Detent	412B007T12
25	2	WASHER, Lock #10	085D0l0S32
26	4	SCREW, Truss Hd #l0-32 x 5/16”	005L005Tl0
27	1	CODE DISK ASSEMBLY, High Order	625A186X99
28	1	DISK, Code	355F047
29	2	BEARING, Sleeve	103J014
30	1	SCALE, Dial	335C0O67
31	3	PIN, Drive	107G035
32	1	COLLAR	371C025T30
33	1	SHAFT, High Order Code Disk	370D077T30
34	1	WASHER, Flat	377A120N31
35	2	SET SCREW, Hex Hole #6-32 x 1/8"	019H002S32
36	1	WASHER, Flat	377A142Q81
37	1	PLATE, Retractor Support	355C098T12
38	2	SCREW, Flat Hd #l0-32 x 3/8”	002L006T10
39	1	PLATE, Retractor	355H257T12
40	3	WASHER, Lock #6	085D006S32
41	3	WASHER, Plain #6	085A006Tl0
42	3	SCREW, Fill Hd #6-32 x 3/16”	004H003Tl0
43	1	*BEARING	103C016U0l
44	2	SHIM	377A144T12
45	1	GUIDE, Locking Lever	355K027B60
46	5	WASHER, Lock #10	085D0l0S32
47	1	PLATE, Mounting	355A113A50
48	1	TAPE, Data Recording: 5 Minute Increments; All Series	212B009
		6 Minute Increments; All Series	212B015
		15 Minute Increments; Series 1542	212B007
		Series 1544 & 1546	212B0l0
		30 Minute Increments; Series 1542	212B013
		Series 1544 & 1546	212B012
		60 Minute Increments; Series 1542	212B014
		Series 1544 & 1546	212B008
		12 Hour Increments; Series 1546 Only	212B0ll
49	1	WASHER, Plain #2	085A002Tl0
50	1	PIN, Cotter	107C001U01
51	1	WASHER, Lock l/4”	085D416S32
52	1	NUT, Hex l/4-20	081B200Tl0
53	1	*SWITCH, Pushbutton for Series 1542 & 1546	154D034
	1	*SWITCH, Toggle for Series 1546 Only	154B016
54	2	POINTER	410C026A15
55	1	SPRING, Take -Up	424B019T21
56	2	SCREW, Fill Hd #l0-32 x 3/4”	004L0l2TlO
57	2	SCREW, Bind Hd #l0-32 x l/4”	006L004TlO

*INDICATES RECOMMENDED SPARE PARTS

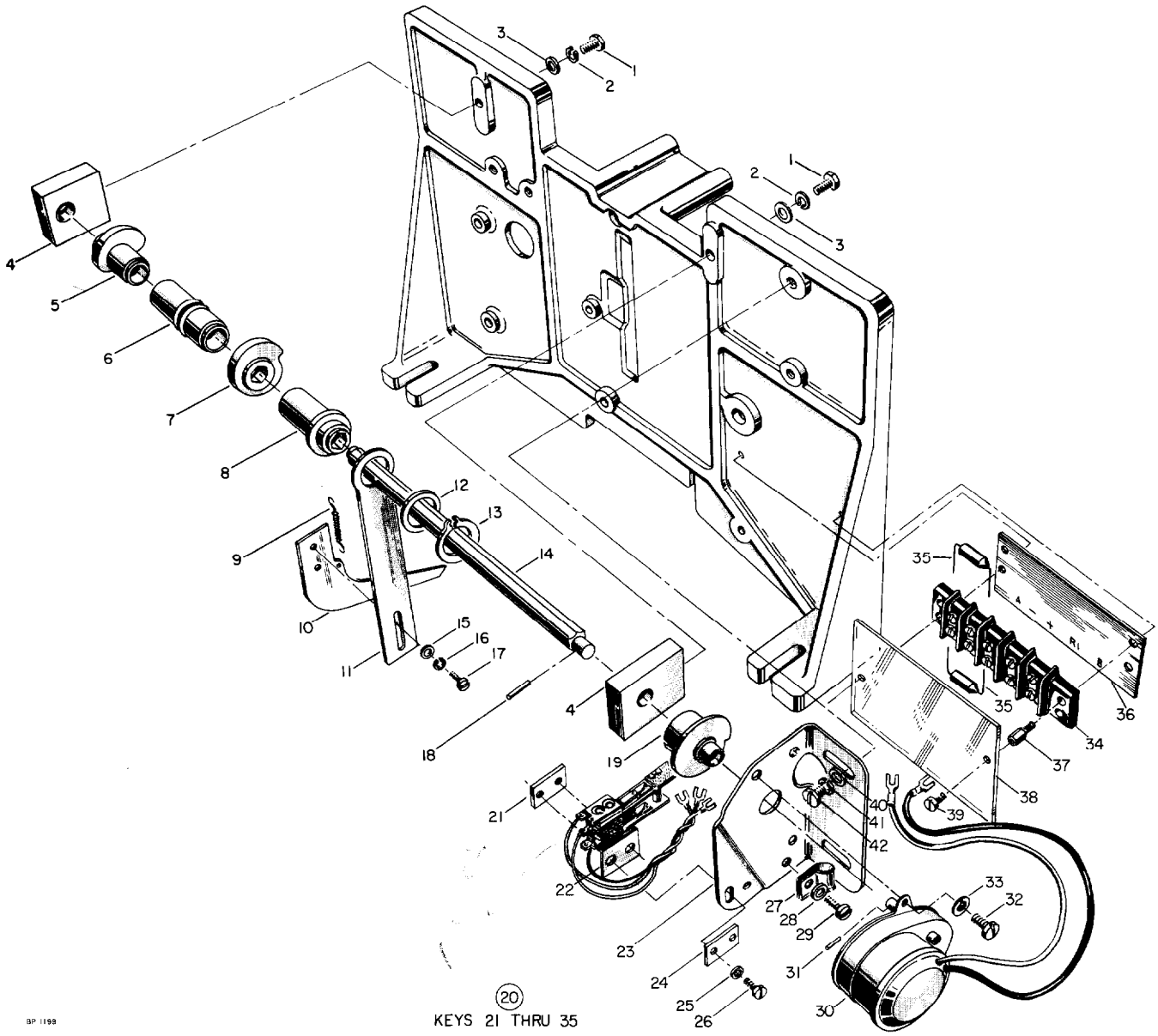

KEYS 21 THRU 35

PROGRAMMING SHAFT ASSEMBLY

SERIES 1542, 1544 & 1546

KEY	QUANTITY	PART DESCRIPTION		PART NUMBER
1	2	BOLT, Hex Hd l/4-20 x 1"		040B108Tl0
2	2	WASHER, Lock l/4"		085D416S32
3	2	WASHER, Plain l/4"		377A259T21
4	2	BEARING BLOCK ASSEMBLY		634A118X99
5	1	CAM, Code Disk Locking		423A040Q81
6	1	PULLEY, Take -Up Spool		413E0llQ81
7	1	CAM, Punch Arm Actuating		423A042Q83
8	1	CAM, Eccentric: Paper Tape Advancement		423A030Q81
9	1	SPRING, Tension		424B0l6Tl0
10	1	PAWL, Lower Feed: Paper Tape Advancement		400D038T12
11	1	PAWL, Upper Feed: Paper Tape Advancement		400D037T12
12	1	WASHER, Flat		377A133N41
13	1	RING, Grip		106A320U0l
14	1	SHAFT, Cam: Hex		370E042T30
15	2	WASHER, Plain #4		085A004Tl0
16	2	WASHER, Lock #4		085D004S32
17	2	SCREW, Fill Hd #4-40 x l/4"		004F004Tl0
18	1	PIN, Roll		107B026U01
19	1	CAM ASSEMBLY, Motor Switch		660A109X99
20	1	PUNCH MOTOR ASSEMBLY	Series 1542 & 1546	623A235X99
	1		Series 1544	623A239X99
	1		Series 1542-D (Telemeter)	623A540X99
21	1	NUT, Bar #4-40		397C035
22	1	SWITCH ASSEMBLY		674A193
23	1	BRACKET		353A267
24	1	WASHER, Bar		377A196
25	2	WASHER, Lock #4		085D004S31
26	2	SCREW, Fill Hd #4-40 x 5/16"		004F005T30
27	1	CLAMP, Cable		108A004
28	1	WASHER, Plain #6		085A006T30
29	1	SCREW, Bind Hd #6-32 x l/4"		006H004T30
30	1	MOTOR		165K002
31	1	PIN, Groove		107B025
32	2	SCREW, Bind Hd #6-32 x 3/16"		006H003T30
33	2	WASHER, Lock #6		085D006S31
34	1	TERMINAL BOARD		171F005
35	2	DIODE	Series 1542 & 1546	166B050
	1		Series 1544	l66B050
	2		Series 1542-D	l66B051
36	1	MARKER STRIP		358D056F62
37	2	POST		403B159A14
38	1	COVER, Terminal Board		379A015Pl0
39	2	SCREW, Bind Hd #4-40 x 3/16"		006F003Tl0
40	2	WASHER, Plain #10		085A0l0Tl0
41	2	WASHER, Lock #10		085D0l0S32
42	2	SCREW, Bind Hd #l0-32 x l/2"		006L008T10

*INDICATES RECOMMENDED SPARE PARTS

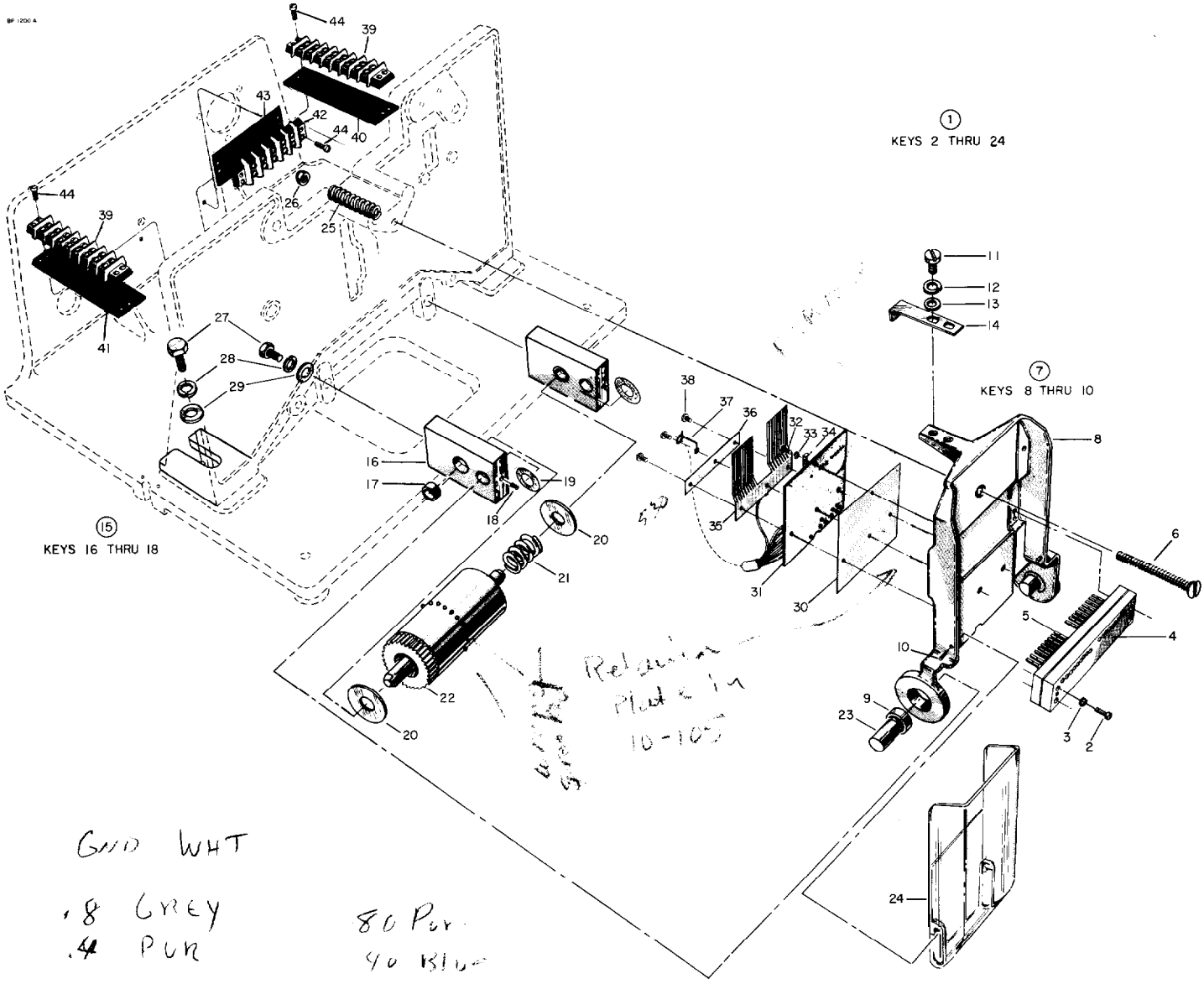

GND WHT

.8 GREY
.4 PUR
.2 BLUE
.1 GRN
.08 YEL
.04 ORN
.02 RED
.01 BRN

80 Pur
40 Blue
20 Grn
10 Yel
8 Orn
4 Red
2 Brn
1 Blk

PUNCH ARM ASSEMBLY

W/TELEMETER-SERIES 1542-D ONLY

KEY	QUANTITY	PART DESCRIPTION	PART NUMBER
1	1	COMPLETE PUNCH ARM ASSEMBLY	642S002
2	4	SCREW, Fill Hd #6-32 x 9/16"	004H009T10
3	4	WASHER, Lock #6	085D006S32
4	1	PUNCH BAR ASSEMBLY	625A242X99
5	18	PUNCH	402B014
6	1	SCREW, Flat Hd #6-32 x 2-1/2"	002H248T10
7	1	PUNCH ARM ASSEMBLY	642A112X99
8	1	ARM, Punch	399C027
9	2	SLEEVE, Bearing	103J014U01
10	2	PIN, Groove	107B002
11	2	SCREW, Fill Hd #10-32 x 3/8"	004L006T10
12	2	WASHER, Lock #10	085D010S32
13	2	WASHER, Plain #10	085A010T10
14	1	BRACKET, Cam Follower.	353C621T12
15	2	BEARING BLOCK ASSEMBLY	611A199X99
16	1	BLOCK, Bearing	323C018A14
17	1	SLEEVE, Bearing	103J014U01
18	1	SET SCREW, Hex Soc #10-32 x 1/4"	023L004T30
19	2	WASHER, Flat	377A147P30
20	2	WASHER, Flat	377A122P22
21	1	SPRING	424A104T10
22	1	SPROCKET ASSEMBLY	659A199X99
23	2	SHAFT, Punch Arm	370E033T30
24	1	*TRAY, Chad	327C012K31
25	1	SPRING, Punch Arm	424A145S13
26	1	NUT, Hex Self Lock #6-32	080H300T10
27	4	BOLT, Hex Hd 1/4-20 x 1"	040B108T10
28	4	WASHER, Lock 1/4"	085D416S32
29	4	WASHER, Plain 1/4"	085A416T10
30	1	INSULATOR	358C135P91
31	1	PRINTED CIRCUIT ASSEMBLY	685A347X99
32	3	SCREW, Bind Hd #2-56 x 3/16"	006D003T30
33	3	WASHER, Lock #2	085D002S31
34	1	CLAMP	391D068T12
35	1	ARM, Contact	399B028C20
36	1	PLATE	355H530T12
37	1	SUPPORT	424D010T10
38	3	SCREW, Truss Hd #2-56 x 1/4"	005D004T30
39	2	TERMINAL BOARD	171F008U01
40	1	MARKER STRIP	358D577X99
41	1	MARKER STRIP	358D576X99
42	1	TERMINAL BOARD	171F005U01
43	1	MARKER STRIP	358D578X99
44	6	SCREW, Fill Hd #6-32 x 9/16"	004H009T30

*INDICATES RECOMMENDED SPARE PARTS

NOTES

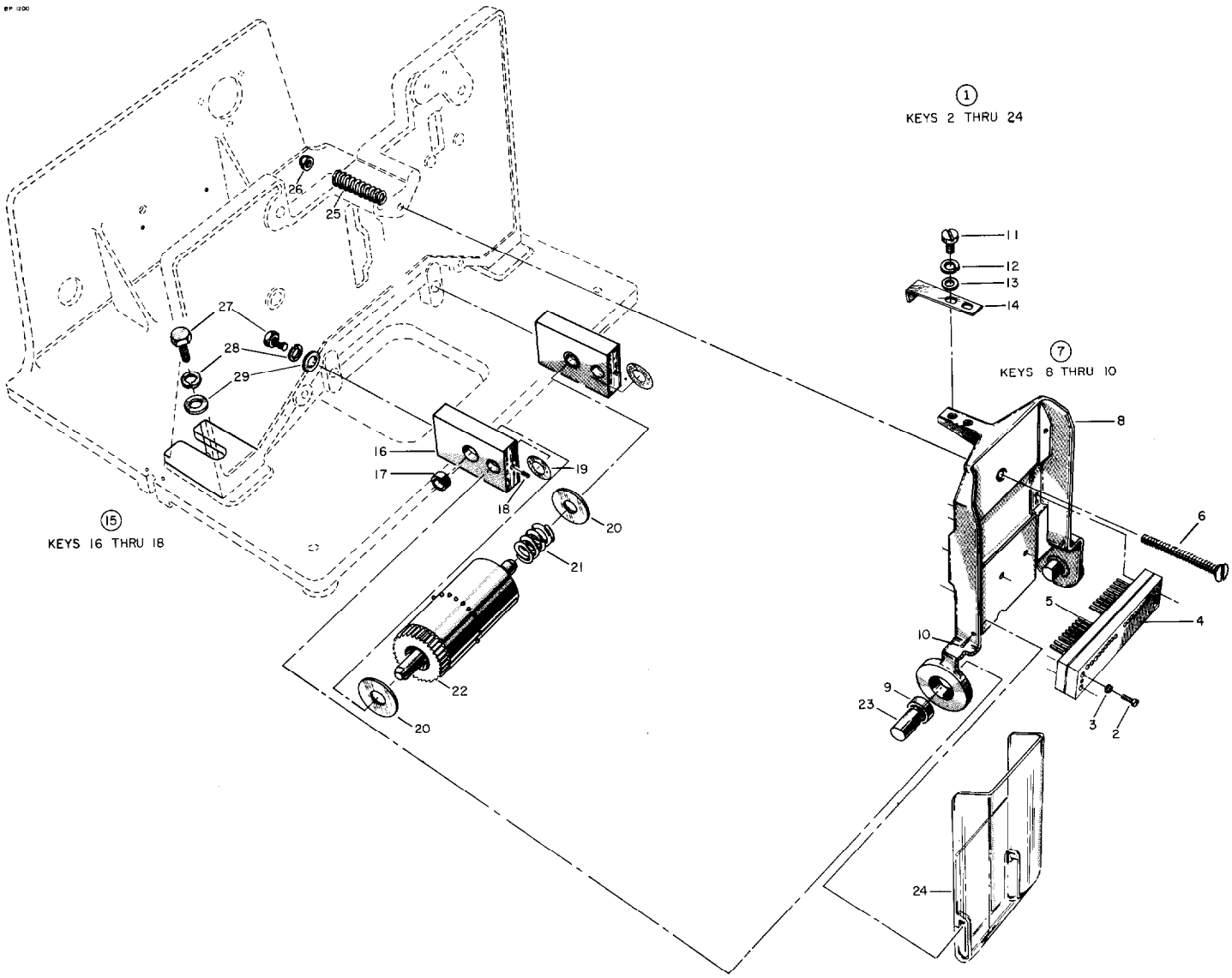
EP 1200
1
KEYS 2 THRU 24
7
KEYS 8 THRU 10
15
KEYS 16 THRU 18
1
2
3
4
5
6
8
9
10
11
12
13
14
16
17
18
19
20
20
21
22
23
24
25
26
27
28
29

PARTS LIST

PUNCH ARM ASSEMBLY

SERIES 1542, 1544 & 1546

KEY	QUANTITY	PART DESCRIPTION	PART NUMBER
1	1	COMPLETE PUNCH ARM ASSEMBLY	642S002
2	4	SCREW, Fill Hd #6-32 x 9/16"	004H009T10
3	4	WASHER, Lock #6	085D006S32
4	1	PUNCH BAR ASSEMBLY	625A242X99
5	18	PUNCH	402B014
6	1	SCREW, Flat Hd #6-32 x 2-1/2"	002H248T10
7	1	PUNCH ARM ASSEMBLY	642A112X99
8	1	ARM, Punch	399C027
9	2	SLEEVE, Bearing	103J014U01
10	2	PIN, Groove	107B002
11	2	SCREW, Fill Hd #10-32 x 3/8"	004L006T10
12	2	WASHER, Lock #10	085D010S32
13	2	WASHER, Plain #10	085A010T10
14	1	BRACKET, Cam Follower	353C621T12
15	2	BEARING BLOCK ASSEMBLY	611A199X99
16	1	BLOCK, Bearing	323C018A14
17	1	SLEEVE, Bearing	103J014U01
18	1	SET SCREW, Hex Soc #10-32 x 1/4"	023L004T30
19	2	WASHER, Flat	377A147P30
20	2	WASHER, Flat	377A122P22
21	1	SPRING	424A104T10
22	1	SPROCKET ASSEMBLY	659A199X99
23	2	SHAFT, Punch Arm	370E033T30
24	1	*TRAY, Chad	327C012K31
25	1	SPRING, Punch Arm	424A145S13
26	1	NUT, Hex #6-32	080H300T10
27	4	BOLT, Hex Hd 1/4-20 x 1"	040B108T10
28	4	WASHER, Lock 1/4"	085D416S32
29	4	WASHER, Plain 1/4"	085A416T10

*INDICATES RECOMMENDED SPARE PARTS

FISCHER & PORTER CO.
WARMINSTER, PENNSYLVANIA, U.S.A.

MANUAL INDEX - PRECIPITATION GAGES

Number	Title
10-204	Instruction Bulletin for Series 1558-1559 Precipitation Gage Recorder Design Sequence A2 (Fischer & Porter 1B35-1558-1)
l0-206	Maintenance Bulletin for Series 35-1548, 35-1558, and 35-1559 Precipitation Gage Recorder (Fischer & Porter 1B35-9009)
l0-207	Instruction Bulletin for Series 35B1558 and 35B1559 Precipitation Gage-Recorder Design Level "A" and 'B"
l0-208	Parts List for Series 35B1558 and 35B1559 Precipitation Gage-Recorder (Design Level "B")

Items l0-200 through 10-203, l0-205 and l0-209 have been deleted.

O.K. but disregard drawings.
See Hydro Mod. #4

INSTRUCTION BULLETIN

for

SERIES 35-1558 AND 35-1559

PRECIPITATION GAGE-RECORDER

Design Sequence A2

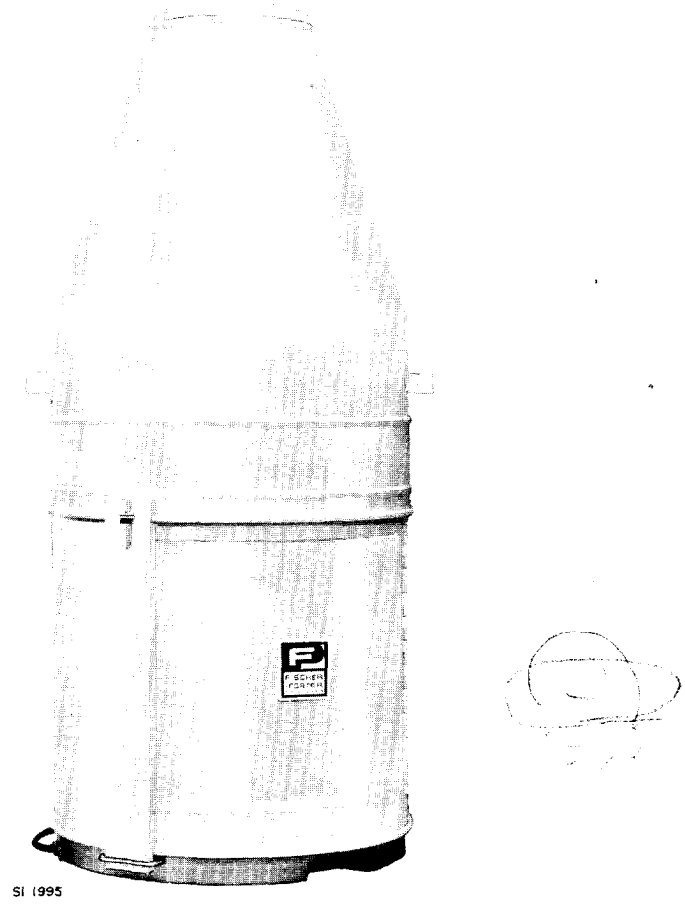

FISCHER & PORTER CO.

WARMINSTER, PENNSYLVANIA, U.S.A.

TABLE OF CONTENTS

INTRODUCTION 1
- I Model Numbering System 1
- II General Description 1
- III Specifications 2

INSTALLATION-OPERATION 2
- I Location 2
- II Unpacking 2
- III Preparation for Service 3
  - A. Model 1559; DC Service 4
  - B. Model 1558; AC Service 4
  - C. Filling the Dashpot 5
  - D. Installation of Data Recording Tape 5
  - E. Test Readout 6
  - F. Alignment 6
  - G. Time Synchronization 6
- IV Placing On Station 7
- V Maintenance 7
  - A. General 7
  - B. Removing Recorded Tape 9
  - C. Emptying the Collector 10
  - D. Changing Time Cycle 10
  - E. AC/DC Interchangeability 10

PRINCIPLES OF OPERATION 11
- I General 11
- II Enclosure 11
- III Measuring Element 11
- IV Input Gearing and Code System 12
  - A. Input Shaft and Gearing 12
  - B. Code Disk 12
- V Programming System 13
  - A. Timer Unit 13
  - B. Drive Motor and Switch 13
  - C. Code Disk Lock-Out 16
  - D. Non-Ambiguity 17
  - E. Punch Out 17
  - F. Recording Tape Drive 17
- VI Punching and Reset Mechanism 17
- VII Code and Tape Design 18
- VIII Telemetering Facilities 18

SERVICING & ALIGNMENT 18
- 1. Pulley Cable 18
- 2. Main Spring 19
- 3. Locking Lever 19
- 4. Programming Cam Shaft 19
- 5. Paper Tape Advancement Lever 19
- 6. Motor Switch Cam 19
- 7. Punch Block Assembly 19
- 8. Punch Stripper Plate 19
- 9. Punch Arm Rider 19
- 10. Punching Pressure 19
- 11. Dashpot Alignment 19

The instructions given herein cover generally the description, installation, operation and maintenance of subject equipment. F&P reserves the right to make engineering refinements that may not be reflected in this Bulletin. Should any questions arise which may not be answered specifically by these instructions they should be directed to the Fischer & Porter Co. for further detailed information and technical assistance.

PRECIPITATION GAGE-RECORDER

DESIGN SEQUENCE A2

INTRODUCTION

I Model Numbering System

Refer to the Fischer & Porter Manufacturing Specification Sheet or the instrument data tag for the specific model number of the instrument furnished. The details of a specific model number are shown below.

Model No. 35-15 58 E A O O A

Catalog Prefix

Punched Tape Recorders

Application
- 58 = Precipitation Gage, Weight Type; AC Service
- 59 = Precipitation Gage, Weight Type; DC Service

Count Ratio
- E = 0.1 inch = 1 Code Disk Count

Telemetering Facilities
- A = Without Transmission Contacts
- D = With Transmission Contacts

Recording
- 0 = Without Tape Punch (Telemeter Only)
- 1 = With Tape Punch Recording

Time Cycle
- 1 = 15 Minute Cycle
- 2 = 30 Minute Cycle
- 3 = 60 Minute Cycle
- 4 = 5 Minute Cycle
- 5 = 12 Hour Cycle
- 6 = 6 Minute Cycle

Clock Style
- A = Mechanical
- B = Electronic

II General Description

The Fischer & Porter Precipitation Gage-Recorder illustrated on the cover of this bulletin, mechanically converts the depth of accumulated atmospheric precipitation (rain and/or snow) during a given period of time, to a code disk position. This code disk position is recorded on punched paper tape at selected intervals. The instrument is designed for a permanent installation in remote areas and is powered by either a customer supplied internal 7-l/2 volt dry battery or 117 VAC service.

The measuring device consists of a collection bucket (collector) for receiving and storing the precipitation, a weighing device for measurement and an indicating dial to display the amount of precipitation gathered by the collector in inches of rainfall.

The recording mechanism operates in conjunction with the measuring device to record at pre determined intervals, the total amount of precipitation accumulated in the collector to the nearest 0.10 inch. It is designed to operate with a minimum of care and by persons of little technical training. Recording is in a standard binary-decimal code on paper tape that is suitable for automatic machine processing methods following translation by means of an F&P Automatic Translator. The Recorder is powered by self-contained batteries or an ac voltage supply and assuming a S-minute readout made, may be left "on station" unattended for long periods of time. Provisions for a manually initiated readout are included. The Recorder is programmed to read out the weighed value of precipitation at predetermined intervals by a timer mechanism, changes to other time intervals are readily made in the field.

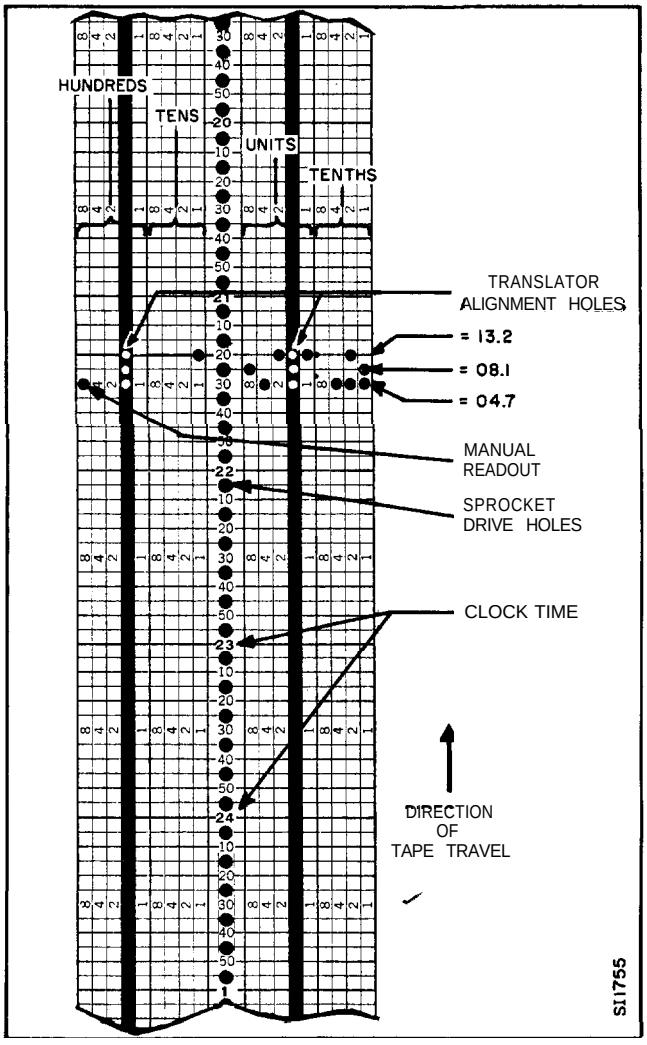

FIGURE 1 FACSIMILE OF DATA RECORDING TAPE

INTRODUCTION (Continued)

The recorder tape is fabricated from a paper stock that is unaffected by excessive temperature and humidity conditions for extended periods of time. The paper tape design as shown in Figure I is such that visual reading can be accomplished with a minimum of effort. Each horizontal row of punched holes represents the total amount of accumulated precipitation in digital form at the time of punching. Each row is divided into sections representing the tenths, units and tens digit of the number. Each section is binary coded l-2-4-8 and mental summation of the holes punched will establish the digital reading. A hole is always punched in the 80 column at the extreme left of the tape, absence of which indicates the end of the tape to a translator.

With auxiliary equipment, a combination of electrical contacts may be operated simultaneously, to present an output for telemetry purposes. This telemetering capability permits Precipitation Gage-Recorder remote reading by interrogation thru radio or telephone facilities. An F&P Binary-Decimal Transmitter serves this function as adjunct equip ment. The instrument is also provided with a direct reading indicating dial.

III Specifications

Electrical Requirements . .7-l/2 VDC Dry Cell (Everready No. 1562); or 117 VAC ±l0%, 60 cps

Power Drain . . . . . 2 Watts max.: 0.05 Watts Average for 5 Minute Readouts.

Measuring Characteristics

Range . . . . . 0 to 19.5” Precipitation

Accuracy . . . . . ±0.15” of Range Span

2” to 4” change . . . . ±2-l/2% of Net Change

less than 2” change. . ±0.05”

Sensitivity . . . . . .0.025” Response

Recording Characteristics

Range . . . . . 0 to 19.5” Precipitation

Code . . . . . Binary-Decimal

Accuracy . . . . . ±0.1” (±0.05” of measured variable)

Dial Graduations . . . . .0.05”

Data Tape . . . . . 410’ ±5’ per Roll Typically, 5 Minute Readout Tape Lasts 5 Months

Readout Time . . . . . 15 Seconds Average

Time Cycle Readouts . . . . . 5, 6, 15, 30 or 60 Minute and 12 Hour Intervals, as Specified.

Timer Accuracy , ... ±2 Minutes per Day (DC) Synchronous (AC)

Ambient Temperature . . -4° to + 122°F

Relative Humidity . . . . 15 to 95%

Physical Characteristics

Dimensions . . . . . .20” Diameter x 42” High

Net Weight . . . . . 78 Pounds

Collector Capacity . . . .25 Inches Liquid

INSTALLATION-OPERATION

I Location

The Precipitation Gage-Recorder may be mounted in any suitable location. Abrupt changes in temperature and humidity as well as vibration will not impair the operation of the instrument.

II Unpacking

All possible precautions have been taken in packing the Precipitation Gage-Recorder to prevent damage to the instrument during shipment. The instrument is shipped in a specially constructed carton designed for maximum protection in transit. It is recommended that the carton and cushion packing material be saved so that reshipment to another site may be consummated with equal protection. Before unpacking the Recorder, make sure that the container is right side up. Refer to Figures 2, 3 & 4, as an aid to the following discussion.

1) Open the top flaps of the container: Note that the interior is divided into two sections. Remove the top cushion inserts from both sections.

2) Remove the plastic tube of dashpot oil and spare parts kit that is taped to the insert of the container.

3) Lift out the hood. From the underside of the hood, reach in and remove the funnel protector insert.

Note that the funnel is pin and notch latched to the interior of the hood and serves to direct the rainfall from the hood opening to the collector thru a small diameter opening. This minimizes losses from evaporation and disturbances due to wind turbulence. It is advisable that during the snow season this funnel be removed in order to prevent snow build-up and freezing within the hood-funnel and consequent clogging of the funnel outlet.

4) Lift out the collector and remove the cushion protector from the collector hub. Remove the wrapped force post from between the collector cardboard flaps.

5) Lift out the separator and cushion from the top of the other section.

6) Remove the case assembly by reaching the hands in, grasping underneath the hand holes on the base of the instrument and lifting straight up from its nest.

7) Remove the latch cover (taped to the case); rotate the lower case counterclockwise to release it from its latches: carefully lift the case up from the instrument.

8) Place the instrument on a bench for ease in service preparation. Remove all shipping lashings. The unit should be inspected immediately for indications of damage that may have occurred during shipment. All damage claims should be made to the shipping agent involved before attempting to install or operate this equipment. Any instructions given on tags attached to the instrument should be followed carefully. In particular, note the tag attached to the shipping screw protruding from the base casting of the scale support assembly. Loosen this screw, turning out until the starting end is flush (or below) the casting surface.

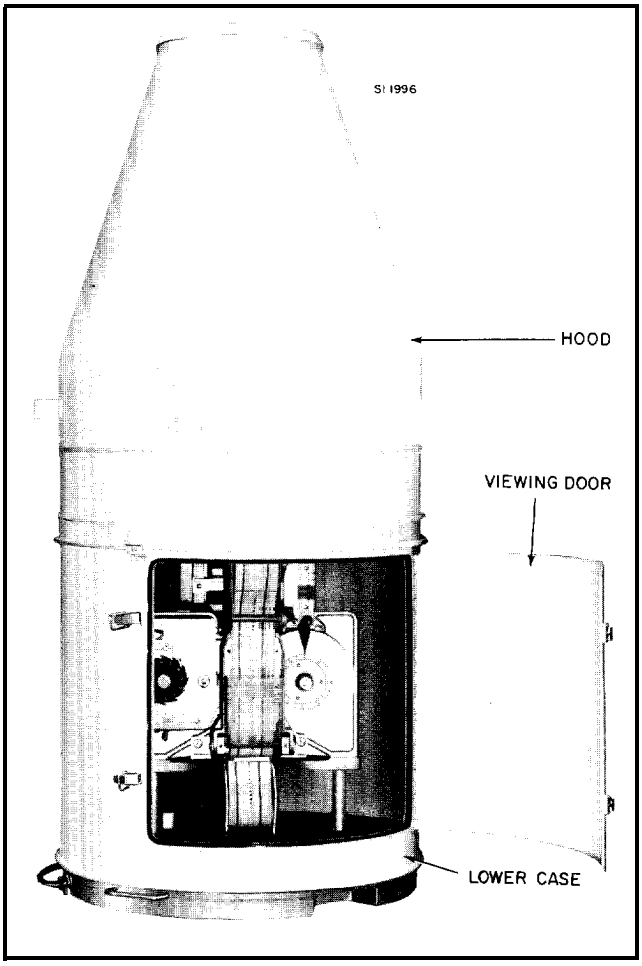

FIGURE 2 PRECIPITATION GAGE-RECORDER, DOOR OPEN

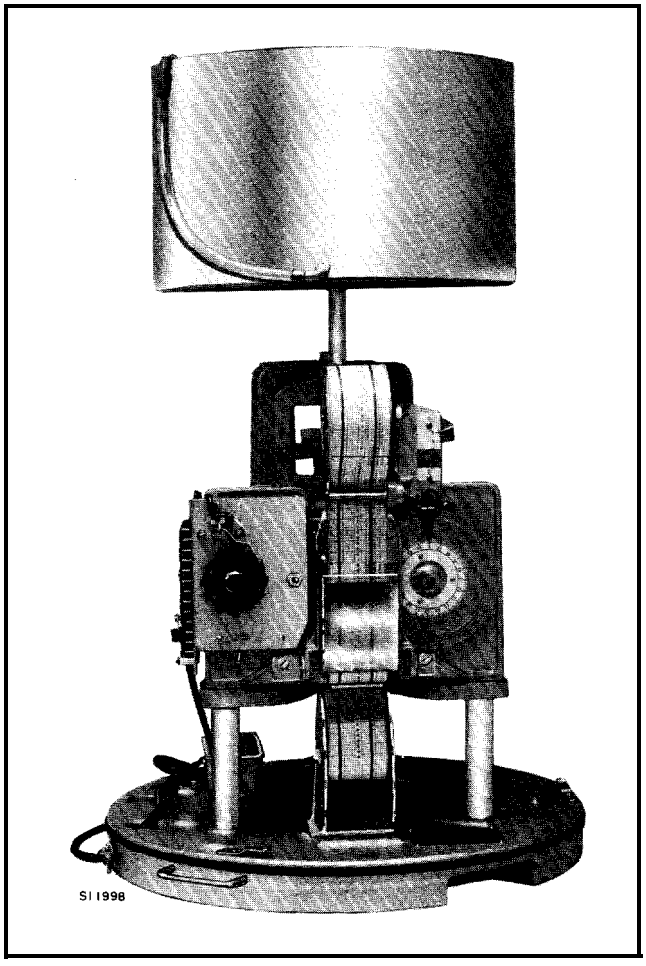

FIGURE 4 PRECIPITATION GAGE-RECORDER, PREPARATION FOR SERVICE

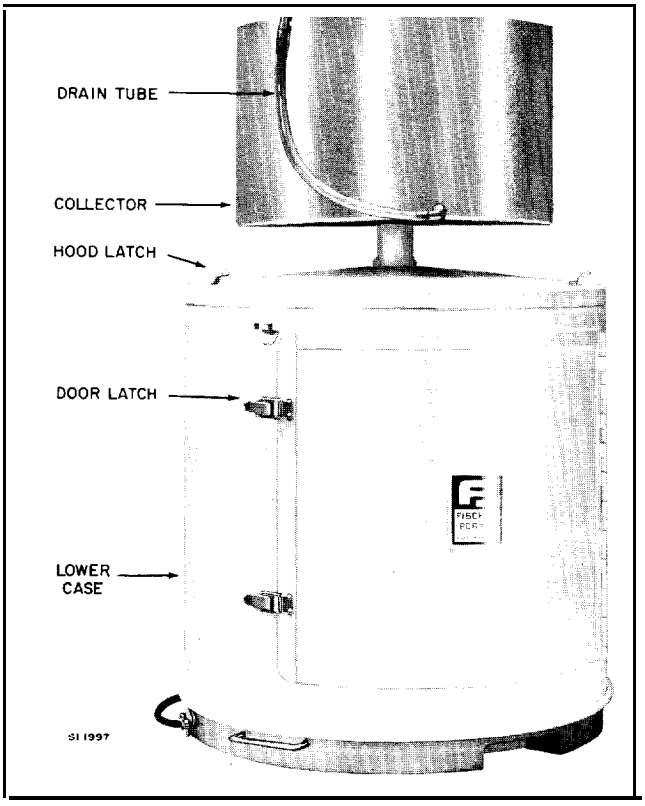

FIGURE 3 PRECIPITATION GAGE-RECORDER, HOOD REMOVED

Note:- Retain for future reshipment by tightening lock nut secure.

9) The weighing portion of the instrument is shipped in a locked position. Rotate the zero adjust knob (located on the top of the weighing scale assembly) counterclockwise, until the code disk starts to move free from the locked position.

10) Insert the force post (inside the collector package) into the weighing scale just forward of the zero adjust knob. Unwrap the collector and carefully place it on the force post.

11) In case of reshipment to another location, rotate the zero adjust knob (located on the top of the weighing scale assembly) clockwise until the top (tapped end) of the "upper main spring hook" is flush with the top of the knob.

Turn the shipping screw (FINGER TIGHT ONLY) until it rests against the "support arm casting". Then, lock in position using the lock nut. Pack the instrument in its original container using all cushion material following a reverse procedure as outlined above.

III Preparation for Service

Refer to Figures 4 thru 7 as an aid to the following discussion.

INSTALLATION-OPERATION (Continued)

A. Model 1559; DC Service

Install a customer supplied 7-1/2 volt dry battery on the three raised bosses of the base plate. Connect the two wire leads that are hanging loose from the Timer Assembly (either Timer Panel or Electronic Timer) to the battery observing the marked polarity.

CAUTION

MAKE SURE THAT THE RED LEAD IS CONNECTED TO THE BATTERY PLUS (+) TERMINAL.

B. Model 1558; AC Service

Customer line power is applied to the instrument by way of the conduit entrance facility on the base plate. Follow Underwriter Laboratory and local electric service codes in wiring power to the instrument. For ease in maintenance it is suggested that connection from the Gage be made either via a 3-pin grounding type ac cord and plug or via an approved service type switch box.

Make sure that the POWER switch on the Timer Bracket is in the OFF position.

Open the condulet junction box located on the base plate; wire to the duplex receptacle therein:

Using 2-conductor cable with a ground:-
- connect the ø leg to the yellow metal terminal
- connect the N leg to the white metal terminal
- connect the ground wire to the green grounding lug on the receptacle.

WARNING

ADJACENT COMPONENTS AND CIRCUITS CARRY VOLTAGES THAT MAY BE DANGEROUS TO LIFE. OBSERVE ALL SAFETY PRECAUTIONS.

REMOVE the ac plug from the receptacle before performing maintenance or service procedures.

DO NOT REMOVE the fuse with the POWER switch in the ON position.

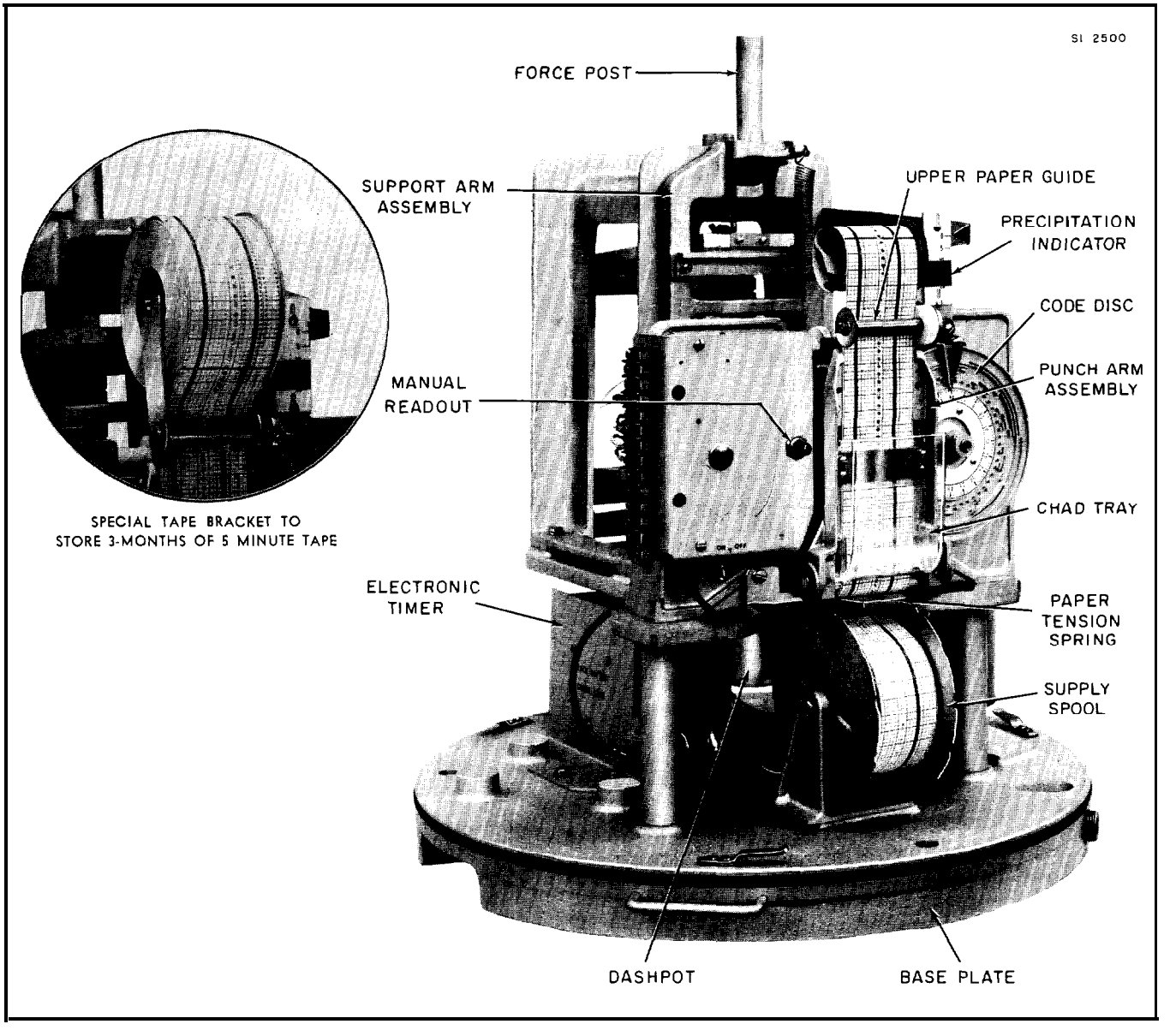

FIGURE 5 PRECIPITATION GAGE-RECORDER, FRONT VIEW

C. Filling the Dashpot

The dashpot cylinder is not factory filled with oil and must be filled before placing in operation. A container of special oil is furnished with the instrument for this purpose. Make certain that there is no excess weight on the force post; that is, only the empty collector. Remove the cap and insert the nozzle of the plastic oil container into the countersunk well of the dashpot shaft. Squeeze the tube until the entire contents have been emptied into the dashpot; the container holds just enough oil to fill to the proper level. If the dashpot shaft well seems full and oil remains in the container, wait a few minutes for the oil to settle in the dashpot, then continue to fill. It may help to slowly move the weighing mechanism up and down allowing the oil to settle in the dashpot.

D. Installation of Data Recording Tape

1) Make certain that the power is shut off. Power may be removed by placing the POWER switch (located on the Timer Bracket) in the OFF position.

2) Remove the plastic chad tray from the punch arm assembly by lifting and tilting the top edge outward.

3) Remove the right side tape supply spool disk by rotating it counterclockwise.

4) Place a full tape roll on the tape supply spool, positioned so that the printed information is right side up when facing the front of the instrument.

5) Replace the right side tape assembly spool disk.

6) Pull the end of the tape off the supply roll, leading it behind the paper tension spring and under the base of the punch arm assembly between the tape drive sprocket and paper tension spring and toward the front of the instrument.

7) Withdraw paper tape in this manner, extending about 20” beyond the tape drive sprocket at the base of the punch arm assembly.

8) Feed the end of the paper tape between the punch holder and punch die; then take up the slack and seat the tape drive sprocket holes over the drive sprocket pins.

If the instrument has been furnished with a standard tape bracket assembly (illustrated in Figure 5) capable of storing 3 months supply of 15-minute (or greater time increment) recorded tape or 1 month’s supply of 5-minute tape -

a) Pull the tape up behind the upper paper guide, to the take-up spool.

b) Slip the end of the tape into the lateral slit in the periphery of this spool, inserting the tape down into the center portion of the spool. Make certain that the paper tape is square with the spool.

c) Take up the slack in the tape by rotating the take-up spool two full turns.

d) Take up any final slack by pulling gently on the spring drive belt.

If the instrument has been furnished with a special tape bracket assembly (Figure 5 insert) capable of storing 3 months of S-minute recorded tape -

a) Loosen the upper paper guide wing nut: slide the spool retainer forward. Pull the tape up behind the upper paper guide to the take up spool.

b) Fold the end of the tape over and slip the end of the tape into the lateral slit in the periphery of this spool, inserting the tape down into the center portion of the spool. Make certain that the paper tape is square with the spool.

c) Replace the spool retainer; tighten the upper paper guide wing nut; rotate the spool once to tighten the paper.

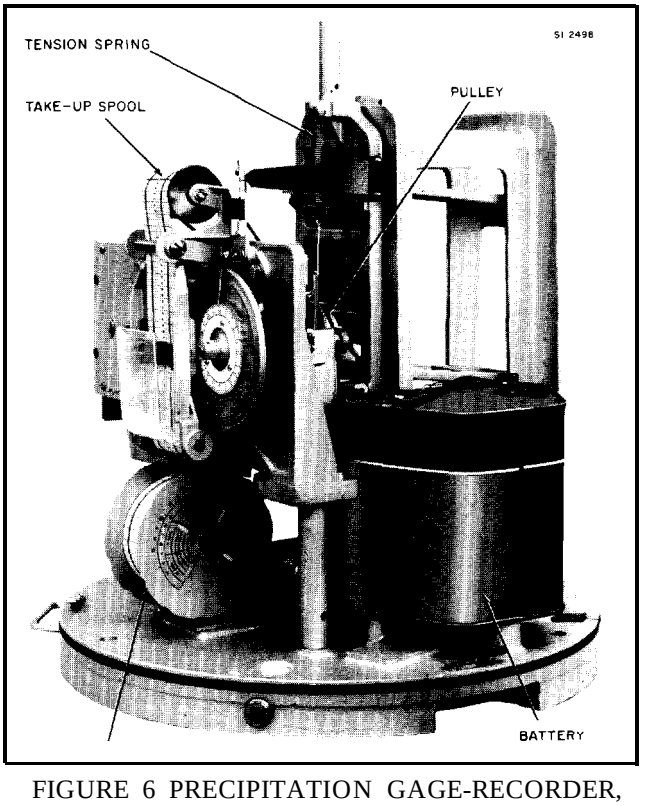

FIGURE 6 PRECIPITATION GAGE-RECORDER, BATTERY SIDE VIEW

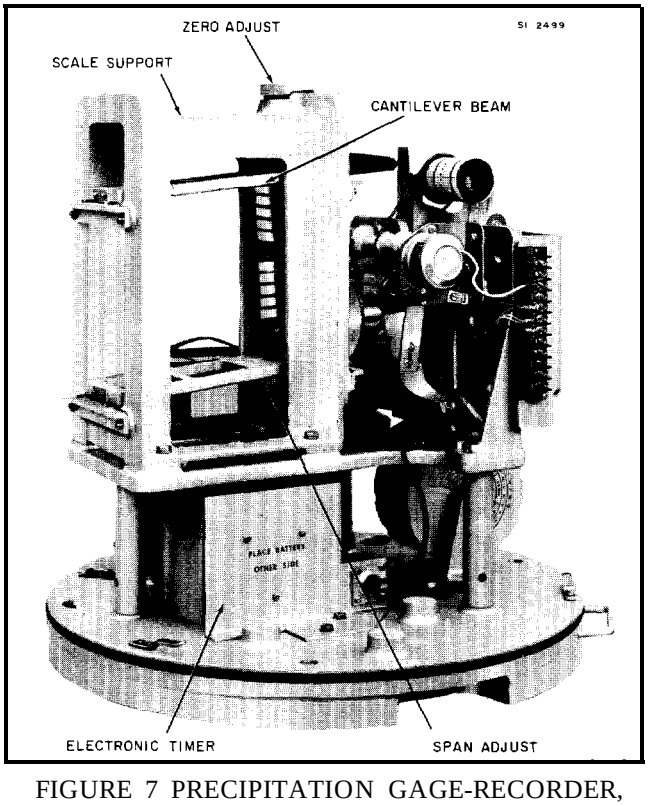

FIGURE 7 PRECIPITATION GAGE-RECORDER, TIMER SIDE VIEW

d) Raise the paper retaining clamp to the up position making sure to seat the tape drive sprocket holes over the drive sprocket pins.

e) Take up the slack in the tape by rotating the take-up spool in a forward direction.

f) Take up any final slack by pulling gently on the spring drive belt.

E. Test Readout

A manually initiated punch out may be made by actuating the MANUAL READOUT pushbutton switch. This switch applies energizing power to the punch motor. If a standard DC Timer is incorporated, depress and hold the switch until the punch out is complete. If an Electronic Timer is being used, depress and hold the switch for 5 seconds.

Use of this switch should be limited to test and alignment purposes inasmuch as each off schedule manual punch out operation will de-synchronize the preprinted time increments of the data recording tape with actual time of day.

It is to be noted that all punch outs have a hole punched (on the tape) in the "8" column at the extreme left of the tape. This enables the Automatic Translator to sense the end of the recorded tape by the absence of this hole.

F. Alignment

The Precipitation Gage-Recorder is aligned and calibrated at the factory and, with the exception of adjusting the zero and span, is ready for service. Carefully place the empty collector on the force post (hood and lower case removed).

1. Adjust the Zero

Rotate the zero adjust knob located on top of the scale support until the code disk pointer is at the exact 0 position. Depress the MANUAL READOUT pushbutton to initiate a punch out operation. Look at the punched value on the tape. -

a) If the tape does not read zero (*no* holes punched except extreme left column "8" and translator alignment holes), rotate the zero adjust knob in a compensating direction; clockwise rotation lessens the count. Repeat the readout until punched zero is obtained on the tape.

b) When the tape does read zero, initiate another manual readout and remove the power to lock the code disk in a punching cycle. This may be accomplished by placing the POWER switch in the OFF position.

c) Make sure that the code disk pointer is in the exact 0 (zero) position. If not, loosen the pointer mounting screw and reposition the Pointer accurately.

d) Re-apply power permitting the Recorder to complete punch out cycle.

e) When the code disk is free (unlocked) the pointer and the 0 (zero) index on the dial should be aligned; if not, rotate the zero adjusting knob.

f) Note that the vertical scale precipitation indicator is at 0 (zero). If not, loosen the scale mounting screw and reposition the scale so that the pointer is in the exact 0 (zero) position. Tighten the scale screw.

2. **Adjust the Span**

Place a 27.186 pound calibration weight (equivalent to 15 inches precipitation) on the collector center stud. Note that the code disk makes l-1/2 revolutions and its pointer is at the 5.0 position and that the vertical indicator is at the 15 position. If these checks are not met -

a) Rotate the span adjust screw located under the lower cantilever beam where the main spring terminates, until the code disk pointer is at the exact 5.0 position (after making l-1/2 revolutions) and the vertical indicator is at the 15 position: clockwise rotation will increase code disk travel.

b) After adjusting the span, remove the calibration weight and recheck the zero. It may be necessary to re-zero the instrument.

G. Time Synchronization

The Precipitation Gage-Recorder records information based on time. It is now necessary to synchronize the recording tape, and the timer mechanism with the actual time of day.

I. Mechanical Timer

a) Re-apply power to the instrument.

b) The Timer Unit can be set by rotating the protruding cam disk in a clockwise direction. The 15 minute interval timer has a four-step cut cam, the hourly timer a single-step cut cam, and the 5 minute timer has a twelve-step cut cam.

CAUTION

DO NOT ROTATE THE CAM
IN A REVERSE DIRECTION.

c) Rotate the timer cam to the punch out position and permit the cam follower switch actuator to drop off the cam and initiate punch out. Wait for the motor to stop thereby allowing the programming shaft to complete its revolution.

d) Remove power from the instrument.

e) Refer to Figure 1, a facsimile of the 5 minute recording tape, and note the center column designating the time of day based on a 24 hour clock. Horizontal line graduations between each of the hour digits represent the appropriate time increments.

To synchronize the instrument, proceed as follows:

f) Position the data recording tape so that the horizontal line on the tape, corresponding to the next increment of the actual time of day, is in the punching position as viewed through the punch holes, or that the horizontal line on the tape corresponding to the previous increment of time is just barely visible at the upper surface of the punch die.

g) Mechanically align the cam follower-switch actuator with the actual time of day to the minute, within the cam increment. Assuming a 5-minute cycle timer and that actual time of day is 3:23 P.M., or 3 minutes past the start of a time increment, the cam follower-switch actuator will be placed at the 3rd division mark past the "20" cam drop-off point. In this manner the punch out will be initiated after a 2 minute delay, to correspond with the 15:25 desired punch out.

h) Apply power to the instrument; synchronization is complete.

2. **Electronic Timer**

When power is first applied to the Electronic Timer, the Recorder will punch out the first time in the time interval specified in the following table.

Regular Punch Interval	Time To First Punch
5 Minutes	23 ± 5 Seconds
6 Minutes	27 ± 5 Seconds
15 Minutes	33 ± 5 Seconds
30 Minutes	33 ± 5 Seconds
60 Minutes	33 ± 5 Seconds

It is from this event that the clock time is referenced, and subsequent punch outs will occur at regular intervals.

IV Placing on Station

For optimum results a firm base should be constructed and the Precipitation Gage-Recorder bolted thereon. Refer to Figure 8, Outline and Mounting Dimensions for details.

For the correct measurement of precipitation the open end of the gage (the receiver) must be in a horizontal plane. This can be checked by laying a carpenter's level across the open top of the gage in two directions; one crossing the other at right angles. This is important; a gage that is not level will produce erroneous readings.

If the Precipitation Gage-Recorder has been provided with telemetering facilities, connect from the 17-point terminal board to the Telemeter Transmitter. Refer to Figures 9, 10 & 11, the Wiring Diagrams and to the Telemeter Transmitter Instruction Bulletin for additional details. It will be necessary to remove the pipe plug from the base of the Recorder and replace with a conduit fitting.

With respect to a Model 1559 DC unit, make certain that the battery is in place and connected properly.

With respect to a Model 1558 AC unit make certain that AC power is applied to the junction condulet.

1) Place the lower case assembly down over the instrument positioned so that the open door exposes the Recorder; make certain that it seats firmly. Rotate the case clockwise about 2 inches until it locks in position.

2) Place the collector on the force post.

CAUTION

USE CARE IN REMOVING & INSTALLING THE COLLECTOR SO AS NOT TO CAUSE UNDUE STRESS ON THE WEIGHING MECHANISM.

3) Place the hood down over the collector until it seats firmly. Rotate the hood clockwise about 2 inches until it locks in position with the locking latch in line with the hood latch.

4) Open the front door. Make certain that the POWER switch is in the ON position and that the timer and tape have been synchronized with the actual time of day. If necessary, re-adjust the "zero" of the instrument. Close and latch the door.

5) Insert the latch cover in its retainer (on the base) putting it in proper position flush to the case, in line with the hood latch. Padlock the instrument.

V Maintenance

A. General

Normal care exercised in the handling and operation of this equipment will go far toward providing trouble-free service. Servicing will, for the most part, be devoted to replacement of the battery, recording tape, time synchronization, and draining of a full collector.

Should problems arise which cannot be solved by normal trouble-shooting procedures, complete information as to the nature of the difficulty should be referred to the manufacturer's service department. Instructions covering corrective measures and parts replacement, if component failure is indicated, will be furnished promptly.

CAUTION

BEFORE PERFORMING ANY SERVICE OR MAINTENANCE PROCEDURES REMOVE THE AC SOURCE BY REMOVING THE AC PLUG FROM THE CONDULET RECEPTACLE ON THE BASE OF THE INSTRUMENT.

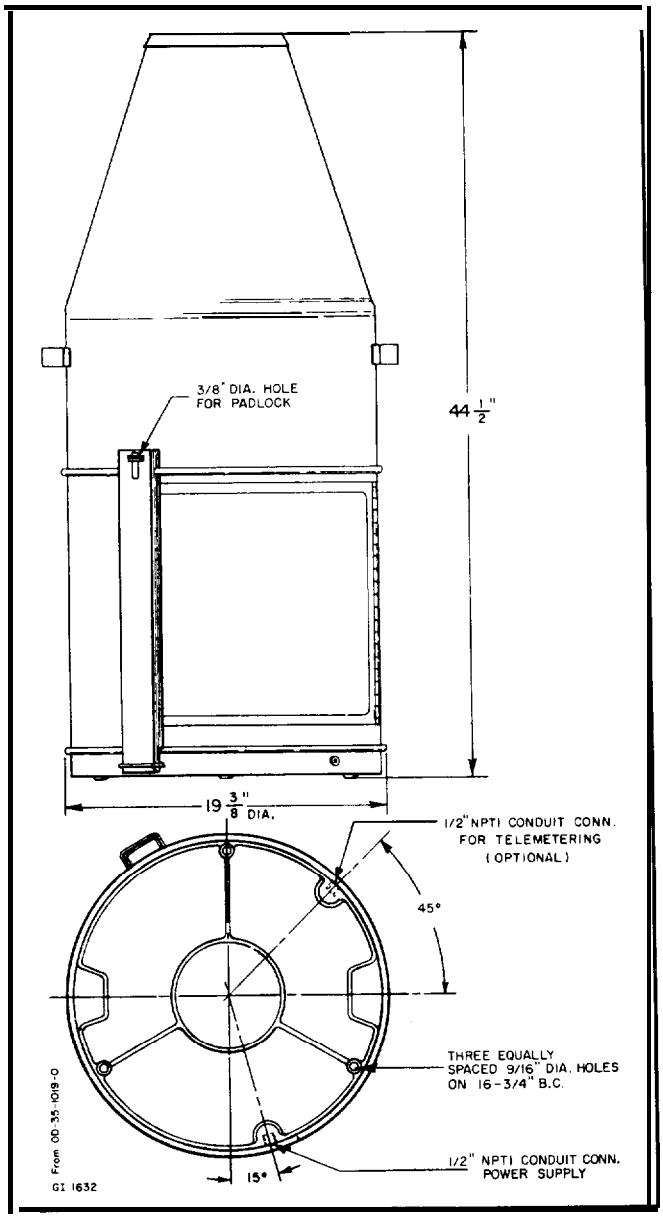

FIGURE 8 OUTLINE & MOUNTING DIMENSIONS

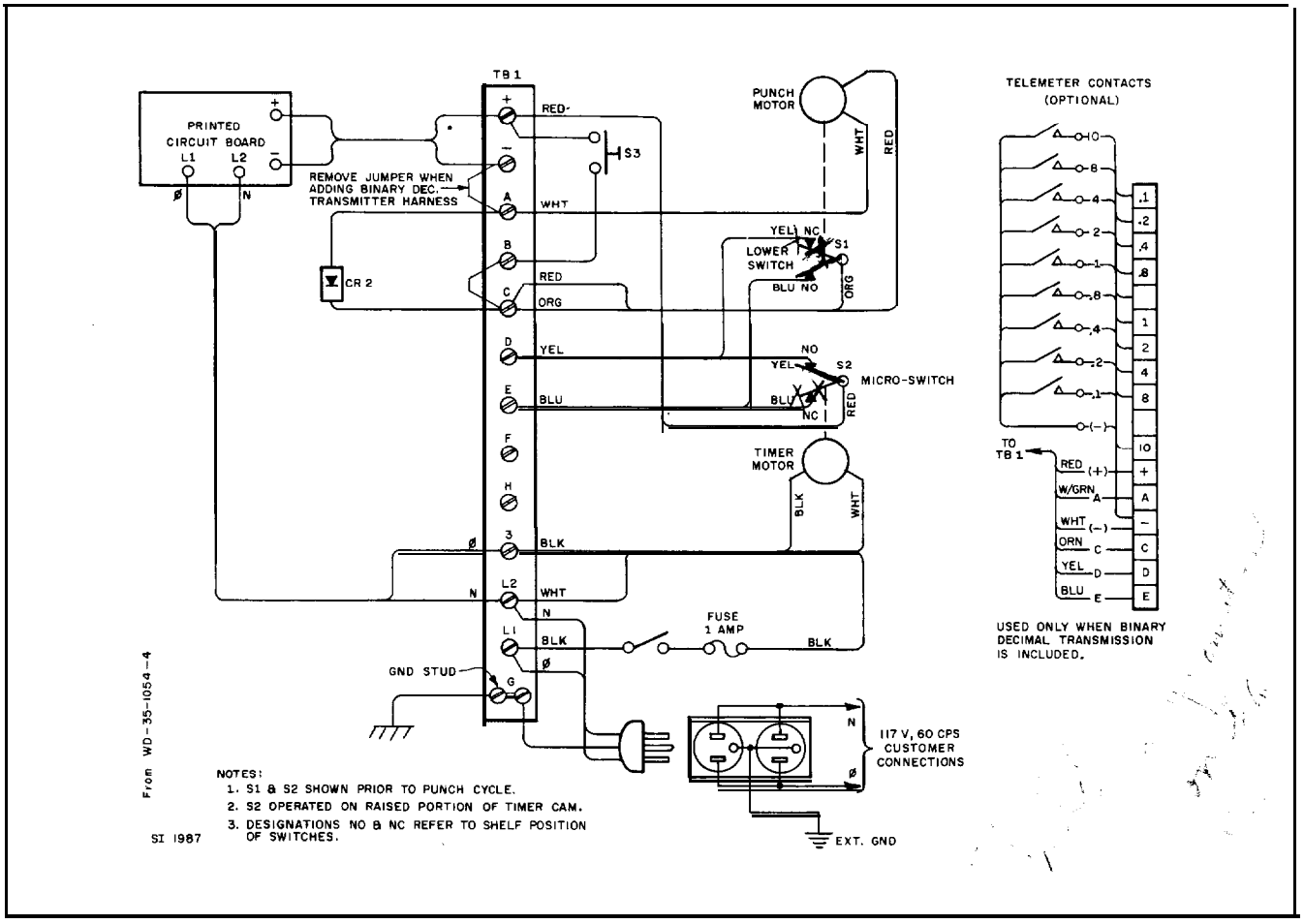

FIGURE 9 WIRING DIAGRAM; SERIES 1558 (AC)

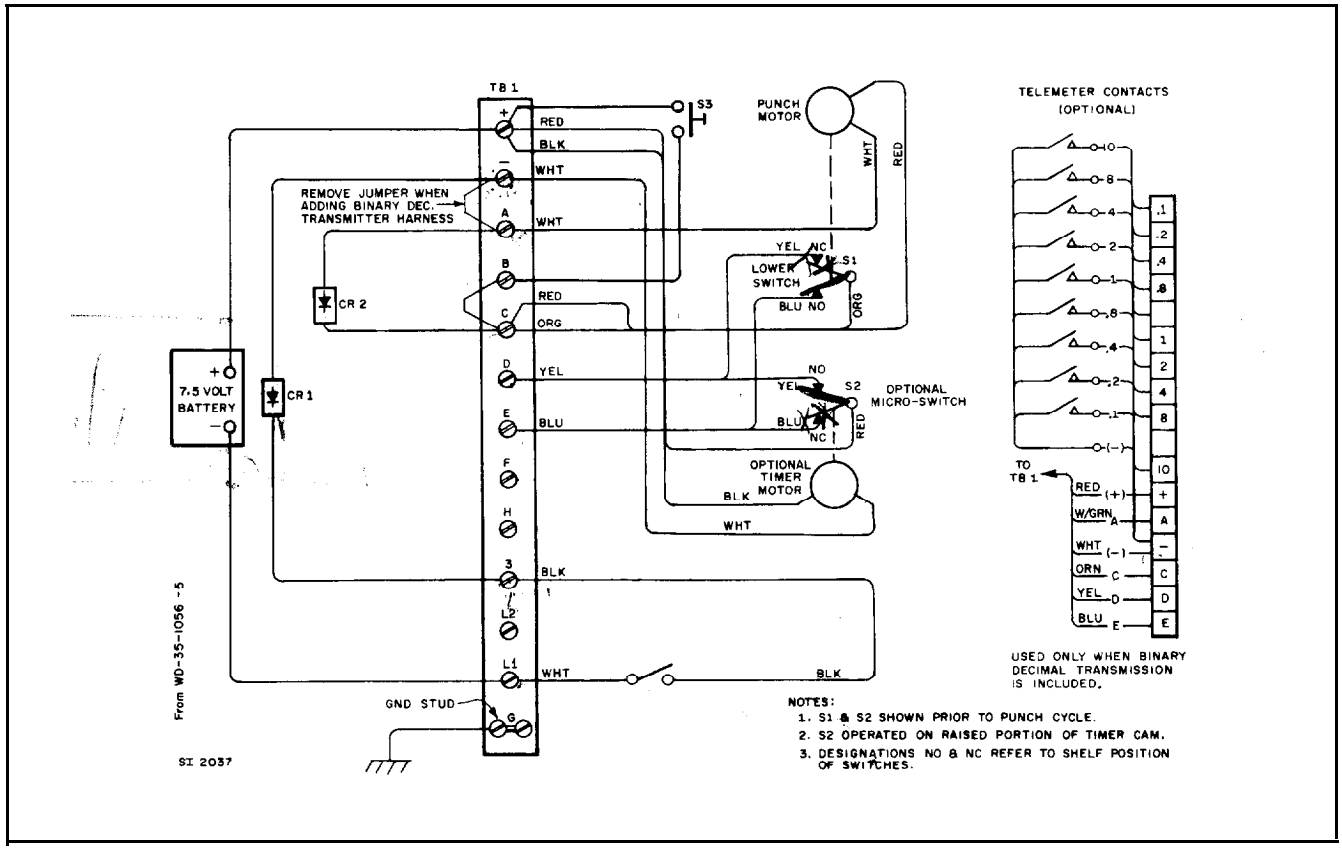

FIGURE 10 WIRING DIAGRAM; SERIES 1559 (DC) WITH MECHANICAL TIMER

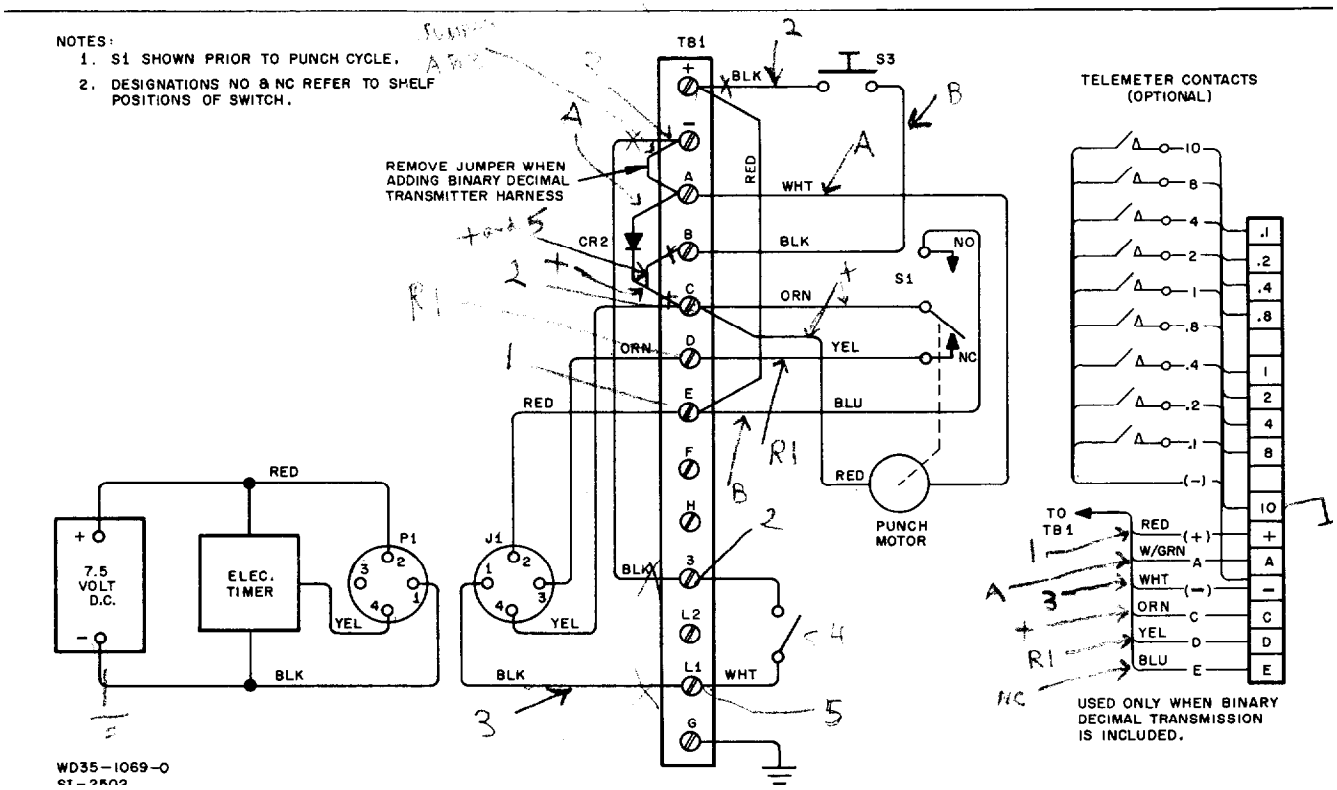

FIGURE 11 WIRING DIAGRAM; SERIES 1559 (DC) WITH ELECTRONIC TIMER

INSTALLATION-OPERATION (Continued)

B. Removing Recorded Tape

At the completion of a recording period (daily, weekly, monthly, etc.) when it is necessary to remove a recorded portion of the recording tape; use the following procedure:

1) Unlatch and open the instrument door. Make sure punchout is not eminent, that there is sufficient time to change the tape.

2) Remove the plastic chad tray.

3) Mark the date, time of removal, and any other pertinent information on the recording tape.

4) From the underside of the instrument below the tape sprocket drive, draw approximately 20" of slack tape from the supply spool, releasing the tape from the drive sprocket pins, or hand rotate the sprocket until the last punched reading has been wound on the take-up spool.

5) From the top of the punch arm assembly pull the data recording tape past the punching position, so as to take up most of the slack.

6) Tear the tape in two, a few inches below the last recorded position, leaving the unrecorded end loose.

7) Roll up the remaining length of recorded tape onto the take-up spool, winding it tightly.

If the instrument has been furnished with a standard tape bracket assembly capable of storing 3 months supply of 15-minute (or greater time increment) recorded tape or 1 month's supply of 5-minute tape -

a) Remove the recorded tape from the take-up spool; slip the recorded tape off the spool by grasping the inner and outer tape roll surfaces with the thumb and forefinger, at the cut-out position provided on the spool.

If the instrument has been furnished with a special tape bracket assembly capable of storing 3 months of 5-minute recorded tape -

a) Drop the spring loaded paper retaining clamp and tear the tape in two just below the sprocket.

b) To remove the recorded tape from the take-up spool, loosen the upper paper guide wing nut, pull the spool retainer out, and slip the recorded tape off the spool by pushing a finger against the tape roll thru the cut out on the right side of the spool.

8) The removed portion of recorded tape may be inserted in a protective tube for mailing or storage. Take care not to bend or fold the roll of recorded tape, as this may cause difficulties in subsequent processing through the F&P Automatic Translator.

9) Rethread the loose end of the recording tape, following the instructions in Section III. D., of Installation-Operation.

10) Check the remaining quantity of recording tape on the supply roll to see whether a sufficient quantity remains for the next recording period, as determined by the supply spool index.

11) Make certain to reposition the recording tape on the drive sprocket in proper relation to the time of day. Refer to Section III. G., Installation-Operation.

INSTALLATION-OPERATION (Continued)

C . Emptying the Collector

Whenever the instrument is inspected or serviced special attention should be given to the precipitation indicator scale (Refer to Figure 5) for evidence that the collector should be emptied. The indicator is graduated from 0 to 20 in increments of 5 and that area between 10 and 20 is shaded and imperatively annotated EMPTY BUCKET. If the pointer is in this shaded area, remove the hood and empty the collector by unhooking the plastic drain tube from the collector rim and lowering it to a drainage position diverting the stream away from the instrument (See Figure 3). Rehook the drain tube and replace the hood.

D. Changing Time Cycle

To change the timing cycle of the Recorder (e.g., from 5 minute punch out intervals to 15 minute intervals), it is only necessary to change the timing cam and recording tape. Refer to Figure 5; this field change may be accomplished with minimum effort, as follows:

With respect to the DC Timer, the timing cam is fixed to the timer shaft by means of a knurled nut and washer. Remove the nut and washer, slide the timing cam off the shaft. With respect to the AC Timer loosen the set screw in the knurled knob, and slide the timing cam off the shaft. Replace with a new timing cam.

To change an Electronic Timer, remove the three screws that mount the Timer to the bracket, disconnect the electrical connector and replace with a new Timer.

The recording tape must be changed to conform with the new timing cycle.

E. AC/DC Interchangeability

A certain amount of flexibility is provided in changing from an ac to dc operated instrument and vice versa. This interchangeability is accomplished by substituting the proper Timer Bracket (fastened to the front plate by 3 screws) and applying appropriate power (117 VAC or 7-l/2 VDC).

The battery for a DC Model instrument normally mounts on the left side of the base plate, upon the three battery pads. Three other pads are provided on the right side of the base plate so that when an ac model is converted to a dc service, the battery may be placed on the right side without disturbing the ac condulet. These right side battery pads are of sufficient height to clear the telemetering terminal block, if so provided.

In addition, when an Electronic Timer is substituted, it mounts at the left battery pad site, necessitating removal of the battery to the right pad position.

PRINCIPLES OF OPERATION

I General

The Series 1558 and 1559 Precipitation Gage-Recorder mechanically measures and converts the depth (weight) of precipitation during a given period of time to angular positions of a rotating shaft and then into a coded digital output.

Operation of the Precipitation Gage-Recorder can best be described by considering it as four interrelated mechanisms; these are the enclosure-orifice, the input weighing mechanism, the drive shaft and the gearing, and the punch programming cycle system. The orifice defines the area over which the precipitation is measured. The input weighing system operates by means of a bucket accumulator (collector) applying varying weight upon a cross-flexure spring scale. Motion of the scale is converted to an angular position of an input shaft mechanism by means of a pulley arrangement. This shaft position is converted to successive positions of a memory code disk. By means of a clock mechanism, the punch programming system initiates the punch demand and establishes the various punching and reset operations required for recording measured values on a paper recording tape. The following paragraphs describe these functions in detail.

II Enclosure

The enclosure is constructed in two parts; an upper and a lower section; refer to Figures 2 and 3. The upper section, referred to as the hood, is in the shape of a truncated cone and is easily removable for emptying the collector. The orifice is 8 inches in diameter and is located in a horizontal position at the top of the enclosure. The edge of the orifice presents a sharp edge to falling precipitation. A cylindrical section extending 9-l/2 inches below the orifice and terminating in a removable funnel having a l/2 inch diameter opening at its inverted vertex directs the precipitation entering the instrument into the collector.

The lower section of the enclosure is cylindrical in shape and is also easily removable for servicing the weighing and recording mechanism. In addititon, a door capable of being padlocked is provided for ease in visually reading the gage value. The padlock must first be removed allowing the latch cover to be removed. Two latches are provided for door operation. This feature prevents tampering by unauthorized persons while the instrument is on station.

The entire instrument is dust gasketed and mounted to a sturdy metal base 20 inches in diameter and having three 9/16 inch holes for mounting to a deck or concrete pad.

III Measuring Element

The measuring element consists of the collector, a weighing scale and an indicating dial; refer to Figures 3 thru 7 &, 12. The collector has a storage capacity of twenty five inches of liquid precipitation and in case of overflow conditions the lower section of the enclosure forms a shield around the mechanism to protect the sensitive gage components from water damage. A plastic tube hooks over the rim of the collector and may be used to empty the collector.

The collector is mounted on a force post that extends upward from the lower section of the enclosure. As the weight of accumulated precipitation in the collector increases due to rainfall or snowfall. etc.. a downward force is exerted upon the post. to a support arm assembly. This in turn is mounted to the face of a scale support. The scale support forms the verticals of a parallelogram and two cantilever beams form the horizontals of the parallelogram. The connecting points of the parallelogram form a cross-spring flexure. The downward force exerted upon the force post pivots around the cross-spring flexure. The cantilever beam pivots downward exerting a force upon a helical spring. The helical spring is made of an iso-elastic material that is virtually unaffected by temperature and humidity. The base of the force post thru the support arm assembly is immersed in an oil filled dashpot to damp out turbulent atmospheric conditions acting upon the collector.

Attached to the base of the support arm assembly is a stranded stainless steel cable that is effectively wrapped around a pulley and anchored to the top of the support arm assembly by means of a tension spring. Motion of the force post is duplicated by the wrap around cable positioned on the pulley. In this manner the vertical motion of the force post travel (increased precipitation in the collector) serves to rotate the pulley and in turn a mated input driving gear having 138 teeth and in turn, the input shaft of the code disk thru a 48 tooth spur gear.

Increasing (or decreasing) precipitation continuously affects the weighing mechanism so that at any given instant the input shaft (code disk) is representative of the total precipitation in the collector.

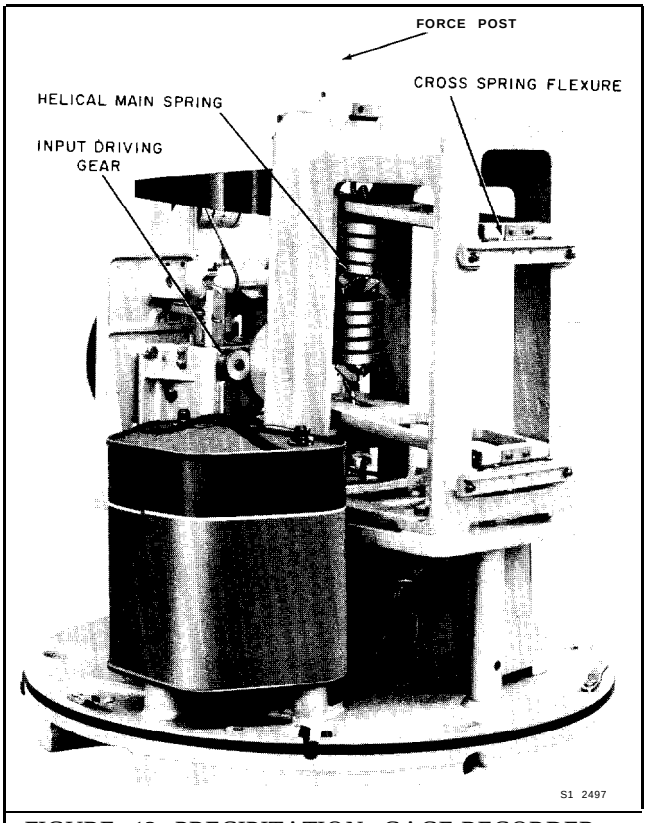

FIGURE 12 PRECIPITATION GAGE-RECORDER, REAR VIEW

IV Input Gearing and Code System

A. Input Shaft and Gearing

The input shaft of the Punched Tape Recorder receives rotary input motion from the weighing mechanism pulley and input drive gear; refer to Figure 13. Fastened to the forward end of the input shaft is a detent wheel having 100 sharp edged teeth to which is attached the analog code disk. Mounted axially and fixed to the shaft, is a worm gear so arranged that a controlled axial movement is permitted. Mounted at the end of the worm gear, is a collar butting against a rocker arm, that is used to move the worm gear axially against the pressure of an interposed spring. The function of this rocker arm will be discussed subsequently. Attached to a transverse shaft and driven by the worm gear is a worm wheel having 100 teeth. Attached to the other end of the transverse shaft is a 54-tooth pinion gear meshing with and driving a 54-tooth spur gear.

Attached to this spur gear is an arm whose rotational travel is limited to approximately 7 degrees, The forward edge of this arm is used to actuate a punch representing the tens of digit of the measured value. With the Precipitation Gage measuring in the range of 0 to 19.5 inches of precipitation the punch for the tens digit ("1") is actuated after the code disk has made a complete revolution.

B. Code Disk

The code disk has 100 discrete radial positions in accordance with the aforementioned detent wheel; refer to Figure 14. Radially on the front surface of the code disk and associated with each of the 100 ratchet teeth positions, is an arrangement of hills and valleys. At any point on the disk, this arrangement represents, in binary decimal code, the amount of precipitation in the collector.

These hills and valleys on the front surface of the code disk are used to actuate the proper punches when recording the registered value. This subject will be discussed subsequently.

The inner area of the front surface of the code disk has a circular dial affixed. The dial is engraved with 200 graduations and is appropriately indexed. A pointer indicates the accumulated precipitation and is visible through the door or when the instrument cover is removed. This makes possible a visual reading at any time during instrument operation. In addition, a vertical scale precipitation indicator graduated in increments of 5 inches is fixed to the front plate. A pointer attached to the support arm assembly moves in a vertical plane to provide approximate indications of accumulated precipitation. The scale area between 10 and 20 (inches) is shaded and marked EMPTY BUCKET to call attention to the fact that the collector should be emptied.

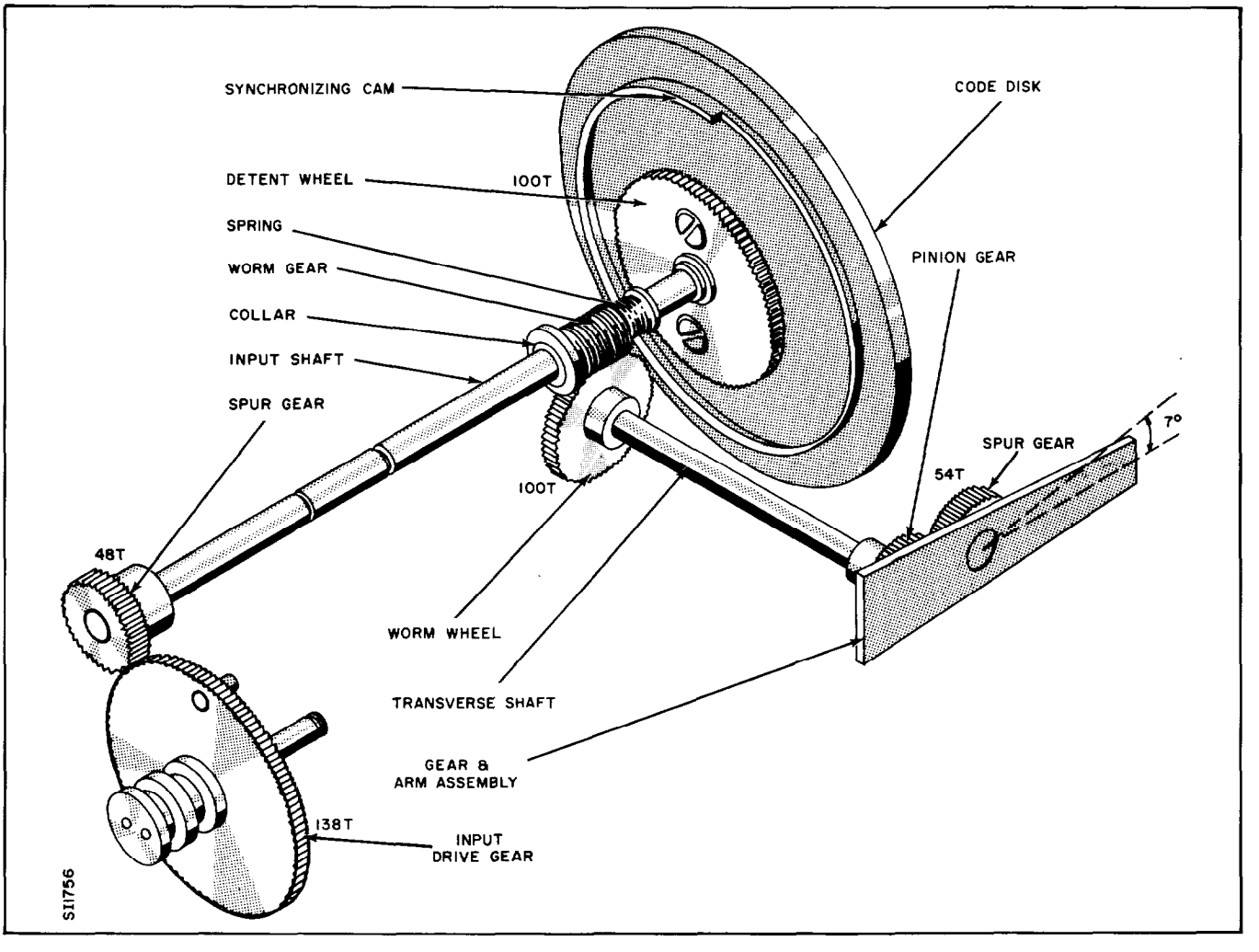

FIGURE 13 INPUT SHAFT & GEARING

V Programming System

A. Timer Unit

The mechanical Timer Unit, shown in Figure 15, consisting of clock, cam, follower and switch assembly, is bracket mounted to the left of the front plate of the Recorder. With respect to the DC Models the clock is encased in a plastic container and derives its operating power from the 71/2 VDC dry cell. With respect to the AC Models, the clock is a synchronous motor operating from the ac line. The clock continuously rotates a cam, so arranged that the switch is actuated every 5, 6, 15, 30 or 60 minutes or 12 hours, as specified. The cam is also used for setting the clock time of day within the specified cycle.

An Electronic Timer may be furnished to automatically program the punch out without utilizing cams and switches. In this instance, those components are removed from the bracket.

The Electronic Timer consists of a precise crystal oscillator whose frequency is counted by cascaded flip-flop circuits. The resultant count of the last stage is the time cycle of the Timer through a silicon controlled rectifier. The crystal is excited by the Recorder's 71/2 volt battery and has a current drain of approximately 3 milliamperes.

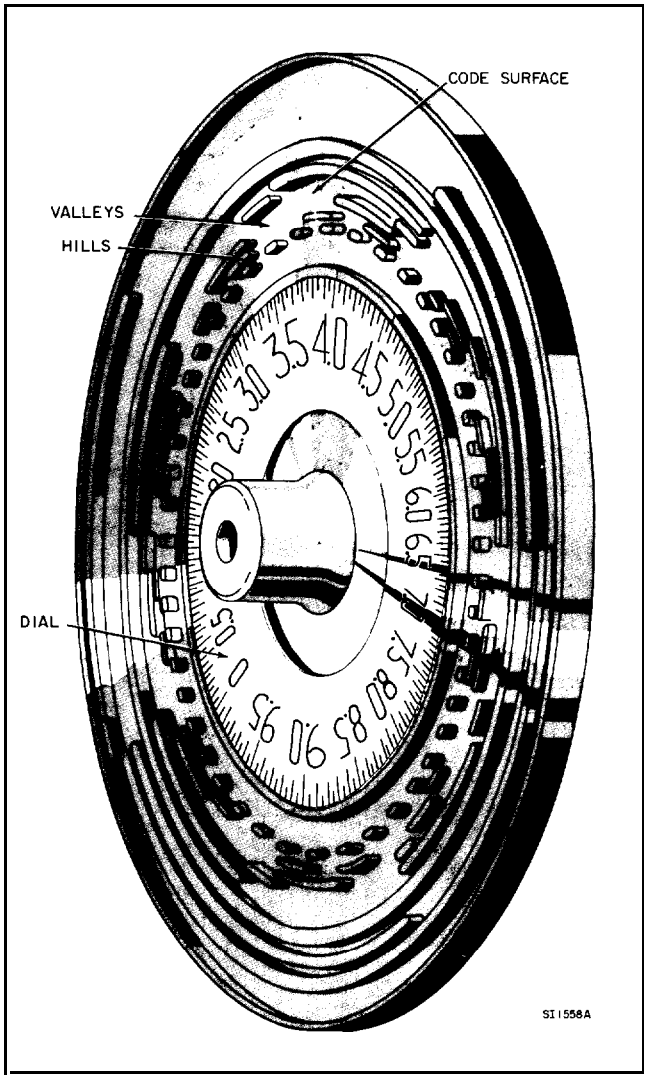

FIGURE 14 CODE DISK

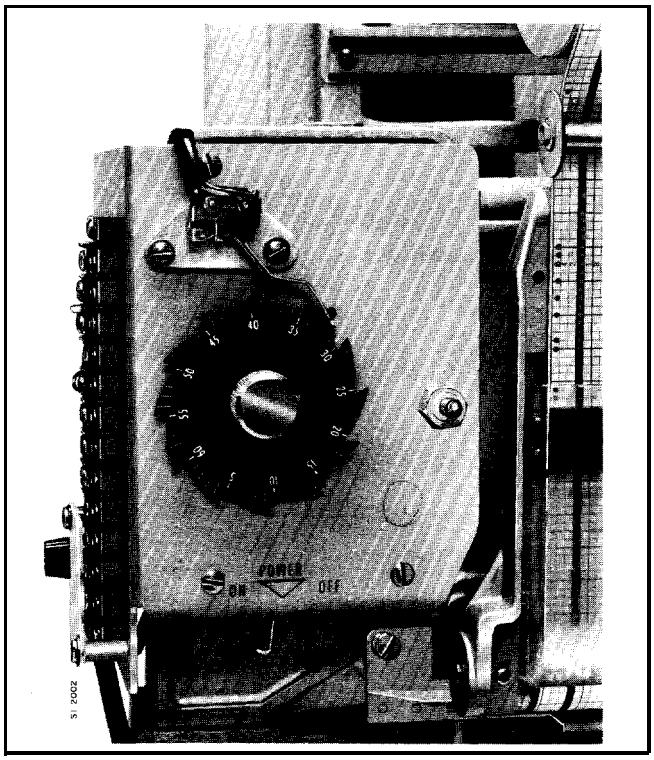

FIGURE 15 TIMER UNIT

B. Drive Motor and Switch

The source of programming power is derived from a small gear motor operating from the 7-l/2 VDC source; refer to Figure 22. This motor drives a hex shaft to which is mounted a series of actuating cams utilized for programming purposes. In order to obtain a single revolution of' the programming shaft for each punch cycle, a switch and motor cam arrangement is used. This initial drive is derived by means of the cam follower-switch actuator riding on the outer periphery of the timer cam.

Refer to Figures 16, 17 & 18, Schematic Diagrams and Figures 19 & 20 the Timing Cycles as an aid to the following text.

With respect to the A suffix models (having a mechanical timer); when the timer cam follower drops from the high portion ("home" position) to the low portion of the cam, the timer switch, S2, operates and applies power to the punch motor through punch motor switch contacts, Sl. The punch motor remains energized until the motor switch leaf drops from the high to the low portion of the motor switch cam, approximately 10 seconds or 85% of the total instrument cam shaft rotation, thereby de-energizing the punch motor. During this rotational period, punch out is accomplished and the input shaft unlocked, free to rotate and accept input signal.

The Timer Unit switch, S2 remains in the closed position while the actuating lever during the passage of time, slowly rides upward to the high position of the timer cam, after which the switch contacts reverse to once again complete an energizing circuit to the punch motor. The punch motor operates to complete the 15% required for one revolution of the cam shaft, at which time the motor switch cam operates the motor switch to break the energizing circuit.

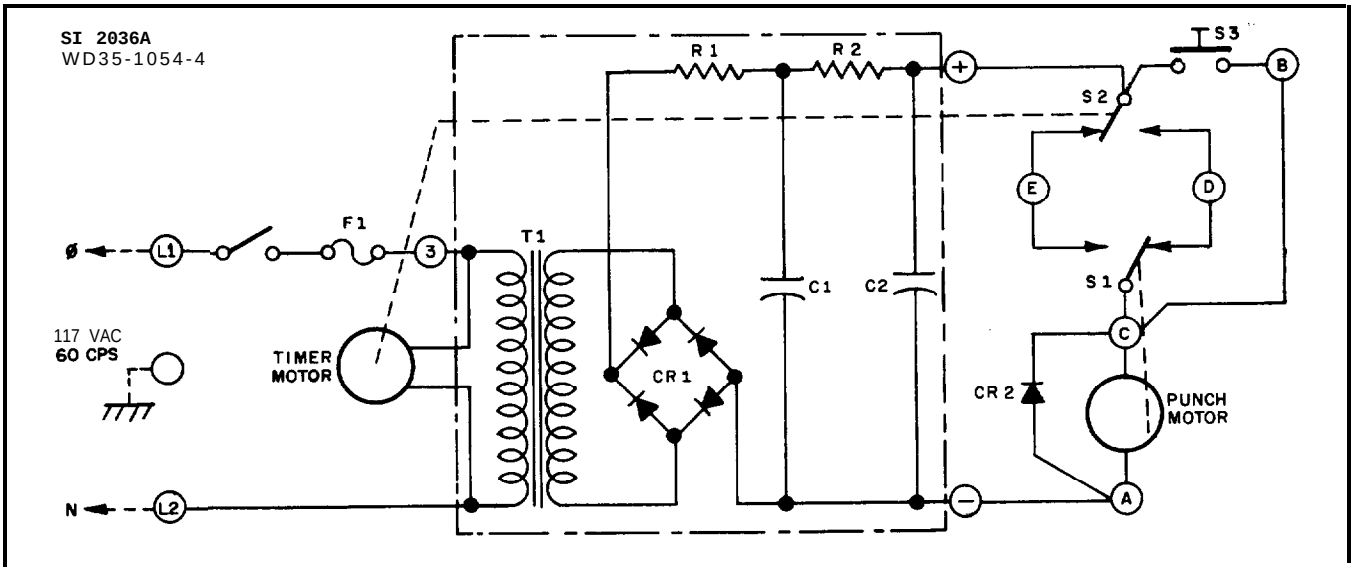

FIGURE 16 SCHEMATIC DIAGRAM; SERIES 1558 (A.C.)

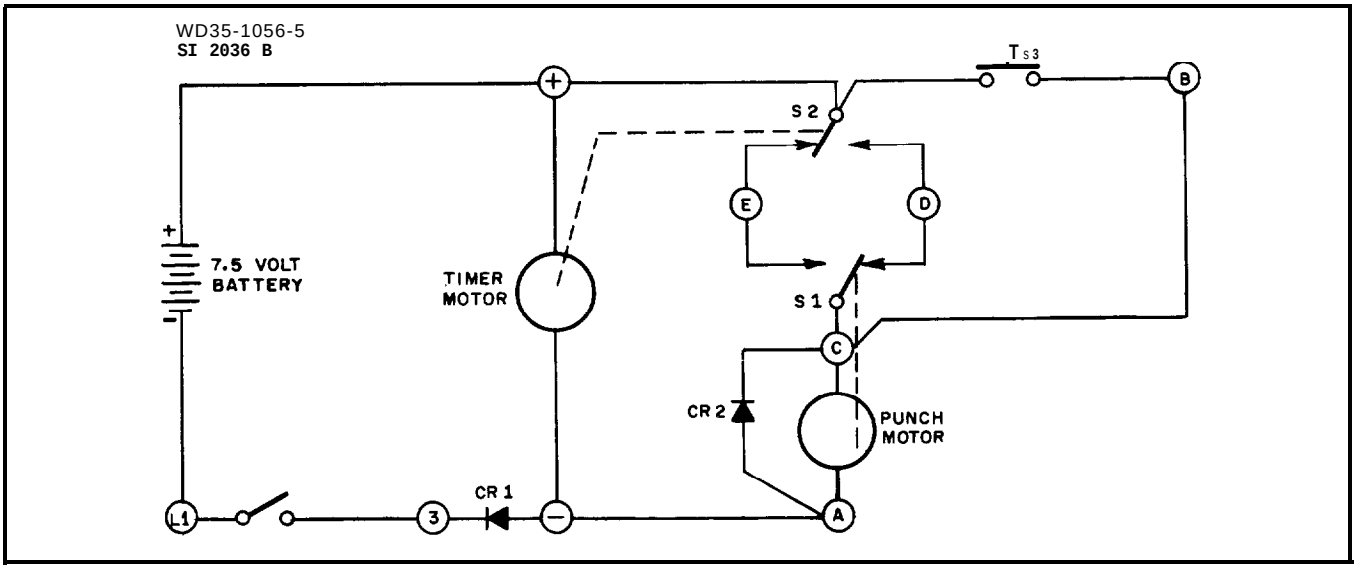

FIGURE 17 SCHEMATIC DIAGRAM; SERIES 1559 (D.C.) WITH MECHANICAL TIMER

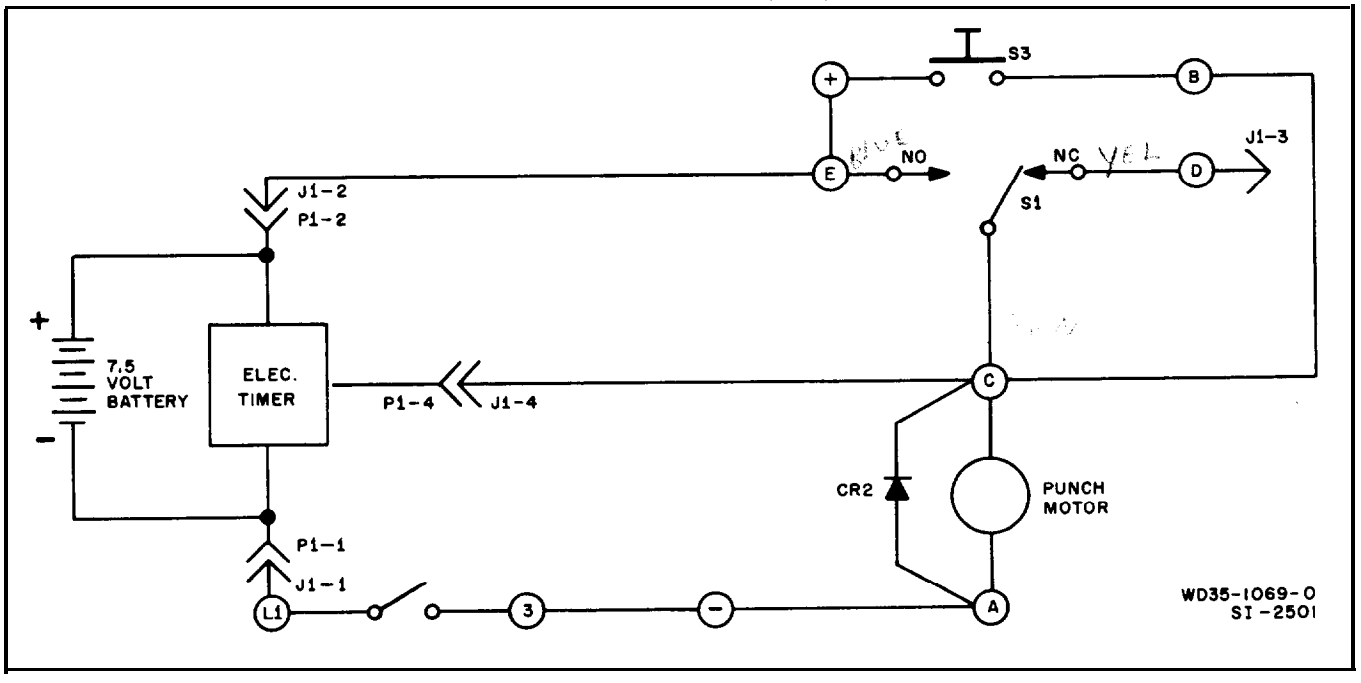

FIGURE 18 SCHEMATIC DIAGRAM; SERIES 1559 (DC) WITH ELECTRONIC TIMER

Home position just prior to punch **Out.**

Actuating lever drops from high lo low portion of timer cam; timer switch operates applying power to punch motor thru punch switch contacts. Punch motor operates.

Punch motor operates thru 85% of motor switch cam rotation completing actual punch out. Punch motor switch drops from high to low portion of motor switch cam. Punch motor stops.

50% of time cycle later, actuating lever rides to high portion of timer cam: timer switch operates reapplying power to punch motor thru punch motor switch contacts. Punch motor operates.

Punch motor operates thru remaining 15% of cam rotation moving recording tape to next increment. Punch motor switch moves from low to high portion of motor switch cam. Punch motor stops. Home position

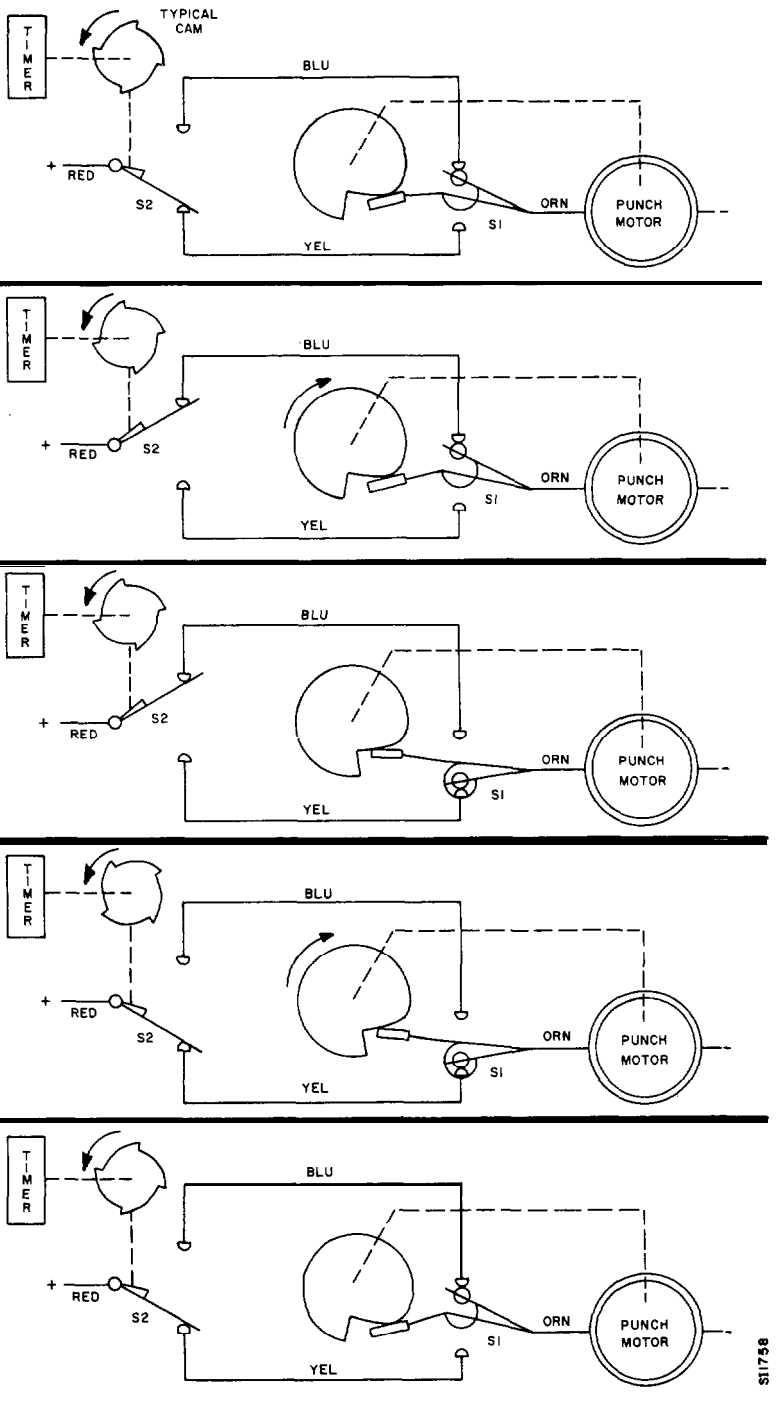

FIGURE 19 TIMING CYCLE; MECHANICAL TIMER

Silicon rectifier (scr) fires. Punch motor operates, shaft rotation moving recording tape to next increment. Punch motor switch moves from low to high portion of motor switch cam.

SCR is shorted out; punch motor operates directly

Punch motor operates to complete actual punch out. Punch motor switch drops from high to low portion of motor switch cam.

Punch motor stops.

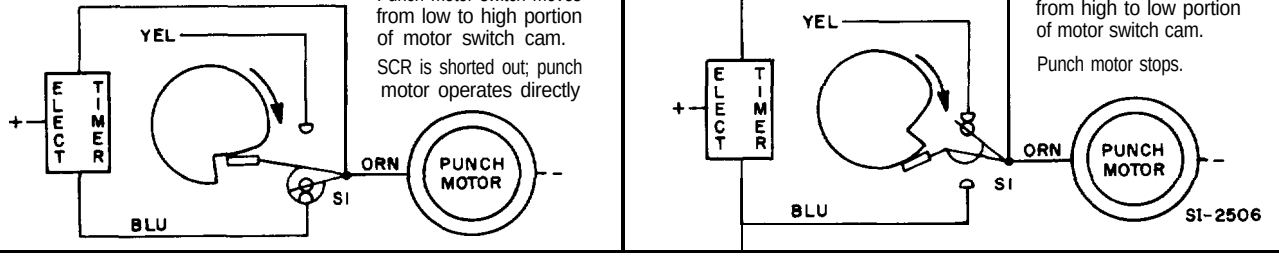

FIGURE 20 TIMING CYCLE; ELECTRONIC TIMER

PRINCIPLES OF OPERATION (Continued)

With respect to the B suffix models (having an Electronic Timer); when the Electronic Timer attains the count that calls for a punch out, a silicon controlled rectifier (SCR) fires to directly energize the punch motor. The punch motor remains energized until the motor leaf switch moves from the low to the high portion of the motor switch cam. This transfer "shorts out" the SCR and the motor now operates directly from the battery power. During this period the tape is positioned to the next increment and punch out occurs. Upon completion of programming shaft rotation, the punch motor switch drops from the high to the low portion of the motor switch cam, and the punch motor stops. Punch out is complete.

C. Code Disk Lock-Out

Mounted on the programming shaft, at the end furthermost from the drive motor, is the code disk locking cam; refer to Figures 21 and 22. This cam engages the rocker arm cam rider at the upper end of the rocker arm. The rocker arm is pivot-fastened at the base and is spring augmented so that it is held in the rearward position by means of the locking cam, when inactive. The rocker arm also has a projecting finger that engages the collar fastened to the end of the worm gear for the axial movement previously mentioned. In addition, the locking lever is pivot mounted at the mid-point of the rocker arm.

When the instrument is in the inactive position, the high portion of the code disk locking cam engages the rocker arm cam rider to hold the rocker arm in its rearmost position, with the result that the locking lever tang engages the locking lever stop and the locking lever heel is lifted clear of the de tent wheel. Thus, there is no restraint imposed on the free movement of the input shaft and code disk.

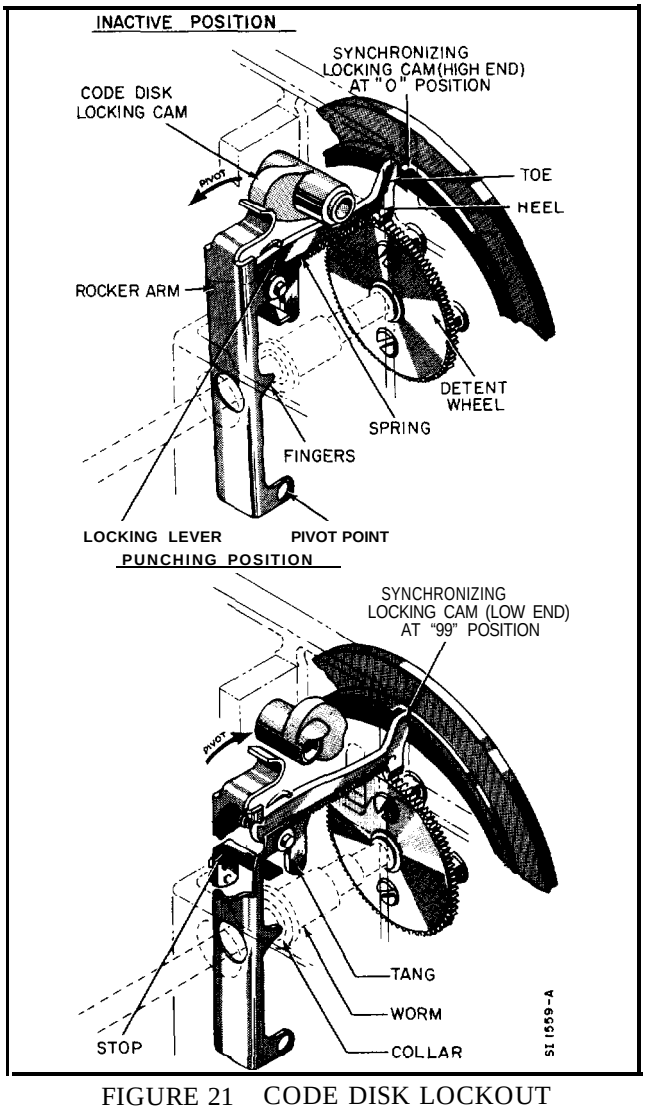

FIGURE 21 CODE DISK LOCKOUT

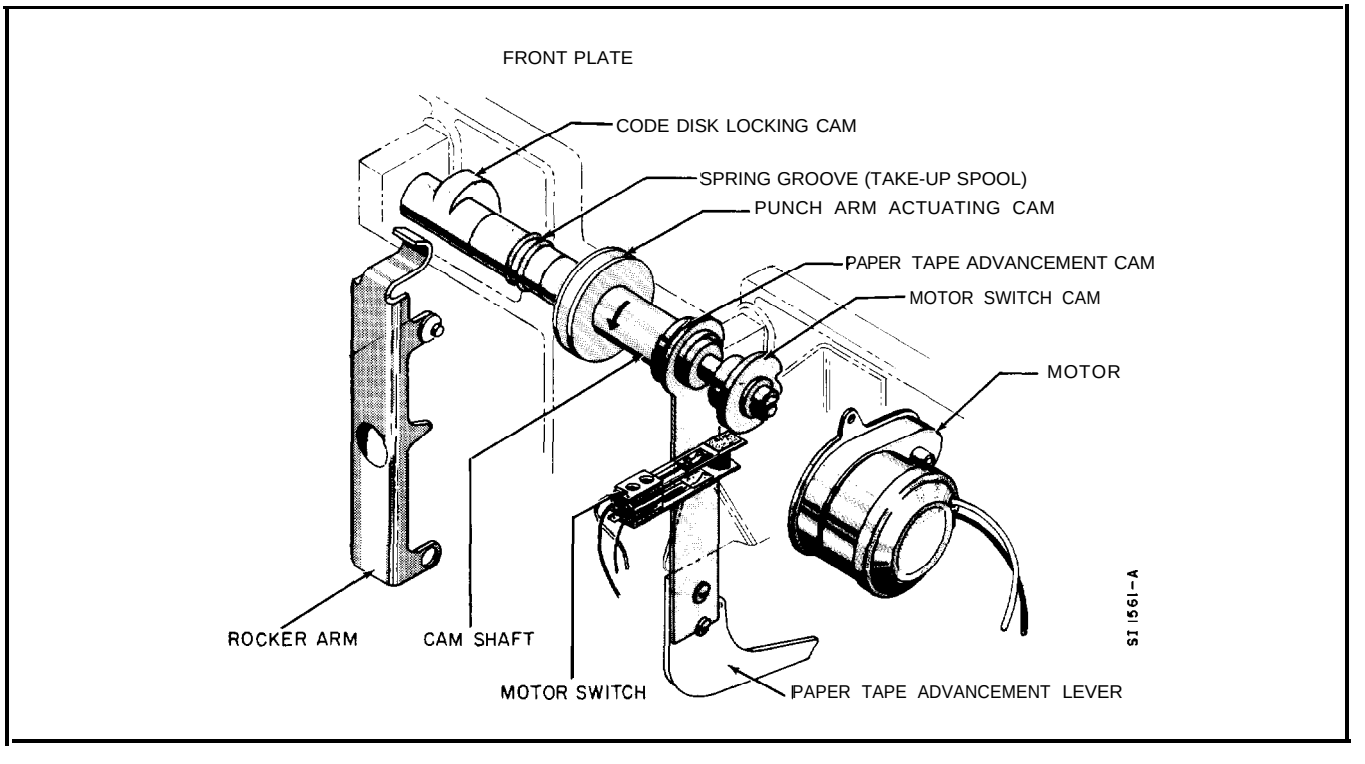

FIGURE 22 PROGRAMMING SHAFT

Upon rotation of the cam shaft (via drive motor actuation), the code disk locking arm makes a single revolution permitting the rocker arm to move slowly in a forward direction under the spring tension. As the rocker arm arm moves forward, the heel portion of the locking lever is lowered so that its sharp edge engages with the sharp edged teeth of the detent wheel, thereby centering and immobilizing the detent wheel and attached code disk. As the locking lever seats and moves forward, the toe portion engages the synchronizing cam surface on the rear of the code disk. Thus, it can be seen that upon initiation of a punch cycle, the code disk is locked in position before actual punch out occurs.

D. Non-Ambiguity

As the code disk completes 100 counts and passes through zero, it is required that the arm attached to the spur gear (rotation as a result of the Input Gearing System) move far enough in a downward direction so as to cause a punch out of the "tens" digit of the measured value; refer to Figure 13. To eliminate all possibilities of an error as the code disk passes through zero, a mechanical cam and gearing arrangement is incorporated. Without this mechanical compensation, the possibility of error arises since the spur gear arm moves only 1/5000th of a revolution for each successive discrete position of the code disk: yet, must permit the same readout (e.g., 0 for the 0.1 to 9.9 values) for exactly 100 successive positions of the code disk and must then assume the next coded value (e.g., 1 for the 10.0 to 19.9 values). In the specific case cited, for example, there must be absolutely no chance that the spur gear will permit reading while the code disk is still only at 99 position.

The mechanism preventing ambiguous readings consists of the synchronizing cam cast on the rear surface of the code disk and on the toe position of the locking lever. The synchronizing cam step is located so that the locking lever toe hits the high portion of the cam when the code disk is at the zero position, and hits the low portion of the cam when the disk is at the 99 position; the cam slope being uniform throughout its entire circumference.

In this manner, when the code disk is in the 90's, the locking lever moves further until the toe touches the low level of the synchronizing cam, thereby allowing the rocker arm assembly to pivot to a more forward position. The rocking arm projecting fingers push against the collar and displace the worm gear axially. This axial movement of the worm gear results in a corresponding movement of the worm wheel, and accordingly of the spur gear arm. This movement compensates for the small increment of the spur gear arm travel beyond the position that it had at the time that the code disk was at its previous lower zero position. In other words, this compensating movement assures that while the code disk may be in the 99 position, the spur gear arm will not prematurely advance far enough forward to the 100 position. Since the locking lever does not ride the synchronizing cam, but rather engages it only upon readout, there is no wear on the cam assembly.

E. Punch Out

Mounted at the mid-point of the programming shaft is the punch arm actuating cam; refer to Figure 22. At the rest position, this cam exerts a force against the punch rocker arm rider located at the top portion of the punch rocker arm. The punch rocker arm is pivot fastened at the base. Therefore, with this pressure exerted at the upper portion, the punch rocker arm will be held away from the main frame of the instrument.

A helical spring is so arranged that a counter force is created which tends to bring the punch rocker arm back toward the main frame and the code disk.

Upon initial application of power to the motor, and consequent rotation of the programming shaft, the punch rocker arm rider drops off the high end of the punch are actuating cam and, owing to the spring force exerted, the punch rocker arm pivots back to the code disk face.

Detailed functioning of the punches will be discussed subsequently.

F. Recording Tape Drive

In addition to providing energy for all of the previously described functions, the motor also provides driving energy for the recording tape feed system. The programming shaft mounts an eccentric cam to which is fastened the paper tape advancement lever; refer to Figure 22. The lower end of the lever contains a pawl that intermittently ratchets the tape drive sprocket advancing the recording tape exactly 1/10th inch during rotation of the programming shaft. The eccentric cam is so adjusted that the recording tape is completely advanced prior to the punch out operation.

A spring belt attached to the programming shaft (seats in a groove) supplies a driving force to the tape take-up spool. With this arrangement, the data recording tape is always held in slight tension.

VI Punching and Reset Mechanism

The punch arm assembly consists basically of the punch rocking frame, pivot mounted by means of a shaft through its lower-most portion, and the punch holder assembly attached to the center portion. A horizontally extended arm at the top of the punch arm assembly has a rider which acts as a follower for the punch arm actuating cam on the programming shaft. A rocking movement is imparted to the punch arm assembly by this cam; whereas the frame rider is held against the cam by the force of a helical spring.

The punch holder assembly consists of a punch holder, provided with guide openings in which the punches are arranged for sliding axial motion, and a punch die with mating guide opening spaced slightly beyond to provide for recording tape passage; refer to Figure 23. One punch is provided for each of the binary-decimal channels and two additional punches are provided for Translator sprocket alignment purposes.

As the punch arm rider drops off the actuating cam, the punch arm assembly pivots in toward the code disk. In this manner, the punches come in

contact with the code disk and the spur gear arm at the proper position to sense the coded value of precipitation in the collector. The individual punches striking a hill on the face of the code disk and/or the spur gear arm, punch a hole in the data recording tape passing between the punch holder and the punch die. The punches that fall into a valley on the face of the code disk do not punch the recording tape. As the punch arm actuating cam continues its rotation (driven by the programming shaft), the punch arm assembly is pivoted out and away from the code disk to its normal position, and a stripper plate produces positive extraction of the actuated punches from the recording tape.

VII Code and Tape Design

The code used in arranging the hills and valleys on the front surface of the code disk, is in the binary-coded decimal system. Four binary digits (bits) with decimal weighting of 1, 2, 4 and 8 are added together to form a single decimal digit. For example, the decimal digit 3 would be formed by adding binary bits 1 and 2. The decimal digit 6 would result from adding 2 and 4, and so on up to the decimal digit 9, being a combination of the binary bits 1 and 8. The greatest count the Recorder will be required to total is a three place digital value, 19.9. To provide this range a total of 9 punches are needed, four for each of the tenths and units digits and one for the tens digit.

The punched columns on the data recording tape are printed in such a manner as to facilitate reading the actual values directly. The tape has a total of 18 columns; 9 each on either side of the center that is provided with a sprocket drive hole. Each half of the tape also contains a column for punching the alignment holes required for translation purposes. To determine a value that has been punched on the tape, simply add the values of the punched holes to obtain each digit comprising the value, as indicated in Figure 1.

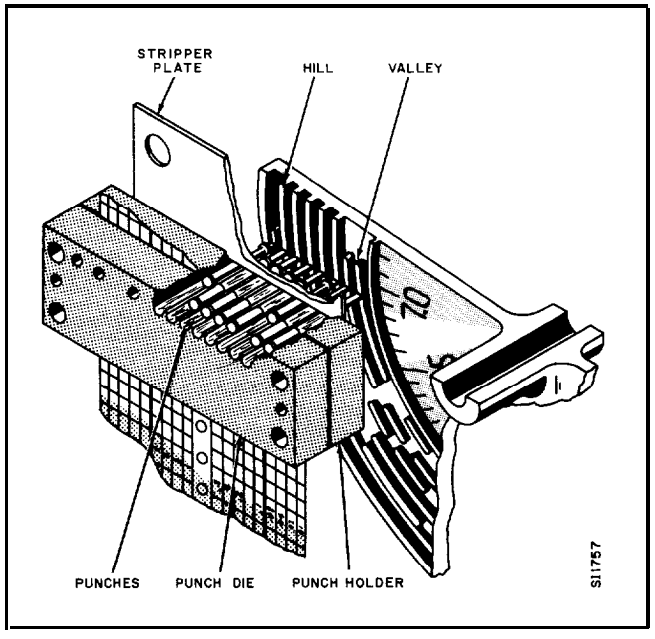

FIGURE 23 PUNCHING MECHANISM

The recording tape used in the Punched Tape Recorder is time printed in the center. The time is based on a 24 hour clock. After each punch out, the tape will move 1/10th of an inch and will position itself for the next punch out. Since the Recorder is designed to operate at the time determined by the Timer Unit, the data recording tape selected for use must have appropriate time divisions between printed time designations in order to synchronize the operation of the unit with the actual time.

The recording tape is subdivided into appropriate increments, and typically under normal conditions, a 410 foot roll of 5 minute tape will last five months.

VIII Telemetering Facilities

As optional equipment a parallel binary-coded decimal output may be included to present in electrical form, by means of contact closures, the same value that appears on the recording tape for telemetering to remote equipment.

A contact board assembly is mounted on the rear of the punch arm between the punch arm assembly and the code disk. Each one of the punches is associated with an electrical contact that closes for each hole that is punched in the tape. The electrical output from the contact leaves is brought out to a terminal board on the front plate of the instrument. The reference designations on the marker strip (refer to Figures 9, 10 & 11) aid in further interconnection to an F&P Telemetering Transmitter for transmission to a remote area.

SERVICING & ALIGNMENT

In the event that any part of the mechanical cams, gears or linkages become worn or broken, the instrument will have to be disassembled as far as necessary to replace the worn or broken parts. Disassembly is relatively simple and does not require special tools other than the wrench supplied with the instrument. Under no conditions should parts be replaced unless a thorough knowledge of the operating principles have first been inculcated. Reference to the illustrations and text in this Bulletin as well as the exploded drawings in the Parts List Bulletin will prove helpful in locating adjustment points and in disassembly procedures. If parts are replaced it may be important to assure alignment as discussed in the following paragraphs.

1. Pulley Cable

   a. Removal

A pulley cable may be removed for replacement by unhooking the tension spring from the upper pulley cable and removing the binding head screw that fastens the lower pulley cable to the support arm. This disconnects the recorder from the weighing mechanism. Loosen the two hex bolts that secure the front mounting plate of the Recorder to the scale base. Swing the right side of the front plate out to permit access to the pulley; tighten the left bolt temporarily (right and left is determined when facing the front of the Recorder). Do not exert any weight on the front mounting plate as it may distort the mounting ears. Loosen the two set screws located in the periphery of the outermost guide

ring; remove the ring. Loosen the outer set screw on the hub face of the gear and shaft assembly; remove the outer pulley cable. Now loosen the two set screws located on the periphery of the inner pulley guide ring; remove the ring. Loosen the centered set screw on the hub face of the gear and shaft assembly; remove the inner pulley cable.

b. Replacement

If a pulley cable broke under service conditions, correspondences between the low order code disk (tenths and units) and high order gear and arm assembly (tens) may have become offset. Correspondence must be attained prior to installation of the replacement pulley cable; proceed as follows:

Set the code disk to 0; initiate a punch out; the tape must read 00.0. If the tape reads 10.0, rotate the code disk clockwise one revolution and repeat the punch out. If the tape still reads 10.0, continue to rotate the code disk clockwise one revolution at a time until the tape reads 00.0. If the first punch out indicated 00.0, rotate the code disk counterclockwise one revolution at a time until 10.0 is punched out. Back off one revolution clockwise. This is true zero. Place a piece of masking tape on the code disk to hold it firmly in position.

Install the inner pulley cable in the hub of the gear and shaft assembly; tighten the centered set screw on the hub face. Re-install the inner pulley guide ring; tighten its two set screws.

Install the outer pulley cable in the hub of the gear and shaft assembly; tighten the outer set screw in the hub face. Reinstall the outer pulley guide ring; tighten its two set screws.

Swing the front plate back into position and tighten the hex mounting bolts. Wrap the outer pulley cable in a counterclockwise direction and reconnect to the support arm by means of the binding head screw. Wrap the inner pulley cable in a clockwise direction and hook to the tension spring.

***2.* Main Spring**

Fasten the helical main spring to its lower hook; place the upper hook thru the main spring and insert the threaded end of the hook up thru the hole in the scale support. Place the D-washer over the threaded end of the upper hook pushing it into the hole in the scale support until it seats firmly. Position the upper hook and D washer so that there is no twist in the spring. Lock the D washer in place with the set screw thru the front of the scale support. Thread the zero adjusting knob to the upper hook.

Place the collector on the force Post and turn the zero adjusting knob until the code disk reads zero.

3. Locking Lever

By means of the locking lever, lock the code disk at zero. Adjust the locking lever stop to allow .005" to .030" clearance between the locking lever stop and the locking lever tang; tighten. With the motor switch cam in the "off" position, the locking lever heel should be approximately 1/64" above the detent wheel.

4. Programming Cam Shaft

The molded witness marks (.030" wide x .015 high) on the nylon cams (code disk locking, punch actuating and paper tape advancement) must be in line with each other and offset 60° clockwise with the hex cam shaft pin (looking at the motor end). The stamped mark on the motor switch cam must be offset 60° counterclockwise with the programming cams (looking at the motor end). Allow approximately 1/32" total end play between the stacked cam assembly and the bearing blocks. The programming cam shaft must rotate freely.

5. Paper Tape Advancement Lever

Initiate punch out several times to ascertain that the punched holes appear exactly on the horizontal time grid line of the data recording tape. If the punched holes are off center, shorten the lever length until proper alignment is accomplished. If this does not produce alignment, extend the lever length. It is advantageous to keep this lever as short as possible. Loosen the two screws that fasten the upper and lower sections of the lever together and adjust the length accordingly; retighten the screws.

6. Motor Switch Cam

Rotate the cam shaft until the leaf switch falls into the cam valley; shut off power. Depress the switch until it "clicks"; allow it to return until the switch "clicks" again. The distance between the switch and the cam should be approximately 1/32 inch. Reapply power.

Advance the cam shaft until the high position of the cam shuts off the motor. Reenergize the motor with the timer and note that the switch moves downward approximately 1/32 inch. If these conditions are not met, adjust the switch.

If an Electronic Timer is being used, disconnect the Timer and proceed as above except using an external simulated switch.

7. Punch Block Assembly

Loosen the four fillister head screws that mount the punch block to the punch arm. Position the punch block assembly so that the punches line up to strike on the center of the raised portion (hill) of the code disk. Tighten the four screws.

8. Punch Stripper Plate

With the punch arm vertical (against the stop) and the punches completey withdrawn, silde the stripper plate down approximately .005" from the milled flat on the punches and tighten. Check that all punches are captured between the milled cut out. Be sure that the stripper plate is not being forced or bent by the punches.

9. Punch Arm Rider

Pull the punch arm assembly forward as far as possible (punches shall touch the rear of the strip per plate); hold in this position and slide the punch arm rider bracket assembly against the high lobe on the punch arm actuating cam; then back off 1/64" and tighten. Check for 1/64" clearance with the lowest part of the cam toward the rider.

10. Punching Pressure

Lock the code disk at 177 reading. Gradually adjust the spring pressure (by means of the screw on the front face and the locking nut on the rear of the punch arm), until the punch pierces cleanly through the paper tape; tighten l-1/2 turns further.

11. Dashpot Alignment

The grade of oil supplied is a silicone base type to meet general operating conditions.

If it is determined that the dashpot shaft is binding, loosen the four hex mounting bolts that fasten the scale support until the dashpot shaft is free. Do not remove the dashpot cam.

EHB 10 206

O.K.

MAINTENANCE BULLETIN

for

SERIES 35-1548, 35-1558 & 35-1559

PRECIPITATION GAGE RECORDER

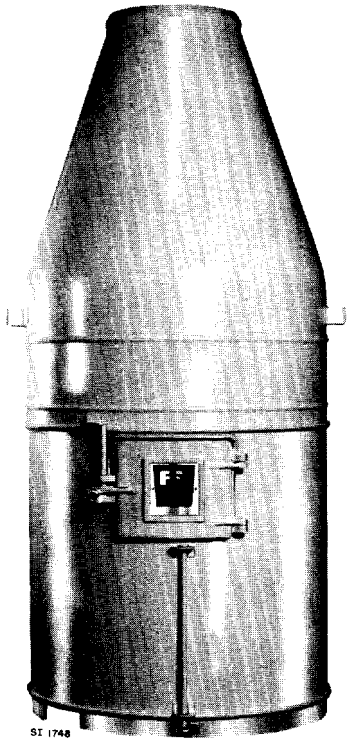

35-1548

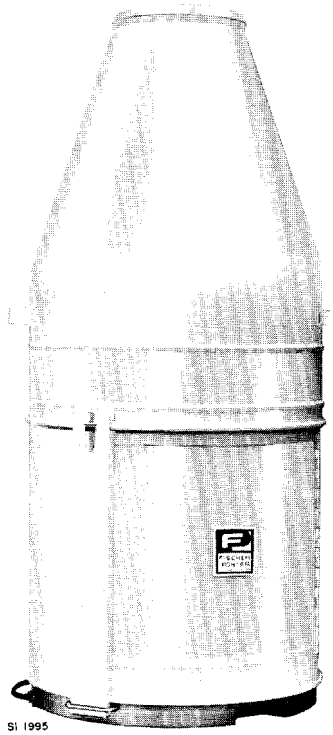

35-1558 & 35-1559

FISHCHER & PORTER CO.

WARMINSTER, PENNSYLVANIA, U.S.A.

TABLE OF CONTENTS

INTRODUCTION		1
SECTION A	WEIGHING MECHANISM	1
SECTION B	CODE DISC DRIVE	2
SECTION C	CAMSHAFT	3
SECTION D	CODE DISC	4
SECTION E	CODE DISC LOCKING & INDEXING	7
SECTION F	TAPE TRANSPORT	8
SECTION G	PUNCHING MECHANISM	11
SECTION H	ELECTRICAL	15
SECTION I	TIMER	18
SECTION J	MOTOR SWITCH	20
SECTION K	MANUAL PUNCHOUT	21
SECTION L	TROUBLE SHOOTING CHART	22
SECTION M	ADJUSTMENTS	24

The instructions given herein cover generally the description, installation, operation and maintenance of subject equipment. F&P reserves the right to make engineering refinements that may not be reflected in this Bulletin. Should any questions arise which may not be answered specifically by these instructions they should be directed to the Fischer & Porter Co. for further detailed information and technical assistance.

MAINTENANCE BULLETIN
for
SERIES 35-1548, 35-1558 & 35-1559 PRECIPITATION GAGE RECORDER

INTRODUCTION

This Bulletin is offered as a supplement to the Fischer & Porter Instruction Bulletins 35-1548, 35-1558 and 35-1558-1. The intent is to aid the technician in performing service and maintenance on the following Fischer 6 Porter Precipitation Gage-Recorders.

35-1548
35-1558
35-1559
35-1558 Design Sequence A2
35-1559 Design Sequence A2

The instructions herewith are divided into Sections and the Sections further divided into numbered paragraphs. The major functions of the Precipitation Gage-Recorder are described in Sections A to K. These Sections also contain procedures for servicing and maintaining the instrument.

Section L is a Trouble Shooting Chart which lists specific problems and indicates which Section and paragraphs should be referred to for a solution to these problems.

Section M contains an index of the Adjustments that can be performed on the Precipitation Gage-Recorder and indicates the Section and paragraphs that describe these adjustments.

Section A

WEIGHING MECHANISM

Refer to Figure 1.

(1) The weighing mechanism consists of a parallelogram of arms with flexures at the four comers (A, B, C, & D). By design these flexures are stiff in all planes except in the weighing plane. They are all flat pieces of spring steel. Any distortion of their flatness will cause the gage to be insensitive.

(2) The main spring is attached to the bottom arm by means of a hook. The top end is attached to the top of the scale support with an adjustable hook. The weight imposed on the bucket post tends to drive the front support arm down. The calibrated main spring counterbalances this weight. This actual weight of the water in the bucket is reflected in the position of the front support arm. It moves downward with an increase in weight.

(3) Since the position of the front support arm (up or down) governs the position of the code disc, there must be a way of adjusting the position of the weighing mechanism so that the code disc reads zero when the system is balanced for an empty bucket. The position of the upper main spring hook can be changed by turning the zero adjust knob. This adjustment changes the relative position of the front support arm (up or down) for the weight in the bucket.

(4) This system provides a linear weighing device. Each added increment of weight (water) to the bucket should move the front support arm downward a proportional distance. Starting at a zero code disc position, addition of equal amounts of water may move the front support arm down proportionally, but the weight equivalent to 20” of precipitation may not reflect as 20” on the code disc. A range adjustment is needed.

(5) The position of the lower hook is adjustable forward and aft on the lower arm through the use of the range adjustment screw. A given weight in the bucket will stretch the spring a given amount and, thereby, cause it to pull with a given force. Increasing the distance between the bottom hook and the rear flexure (L) increases the lever ratio of the spring relative to the weight of the front support arm and bucket. The front support arm will move upward decreasing the number on the code disc. Decreasing the (L) distance causes the front support arm to move downward and the code disc number increases. The lower hook is mounted so that it is free to pivot on a shaft. It must clear all other parts of the bottom arm. Any side rubbing will cause insensitivity of the gage.

(6) In calibrating the gage adjust the zero knob. Add a known weight equivalent to 20” of water, and adjust the range screw until the code disc reads 20. Remove the weight and fine adjust the zero knob again. Readjustment of the range after this is not normally needed.

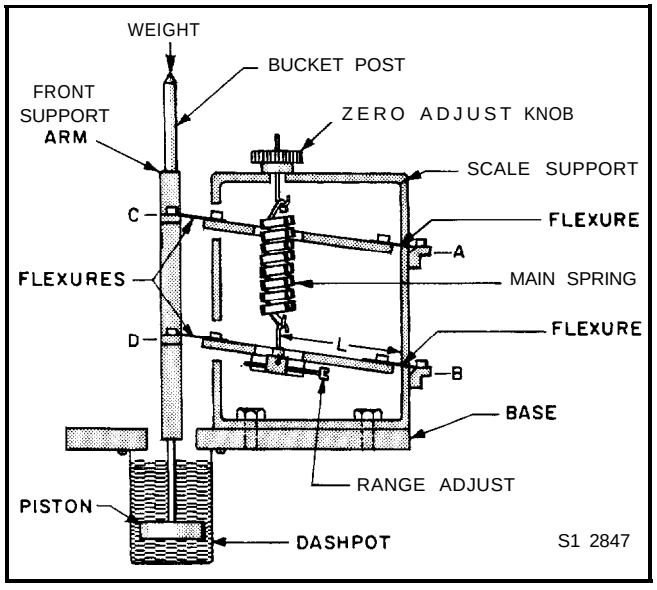

FIGURE 1 WEIGHING MECHANISM

(7) A piston which is attached to the bottom of the front support arm moves up and down in a close fitting dash pot mounted under the base. The oil in the dash pot retards any rapid change in the piston position, thereby, providing the needed damping to the system. Since the front support arm does not move exactly vertical in its travel (the parallelogram linkage causes it to move slightly forward and aft), the piston may rub the side of the dash pot. This will cause insensitivity or dead spots in the gage. This can best be relieved by loosening the four bolts that hold the scale support to the base. Move the support until the interference is relieved and retighten. If this check is made with no oil in the dash pot you can actually hear the piston scrape if there is an interference.

(8) If the code disc is displaced by the equivalent of 1/2” of water, and released with no oil in the dash pot, it will oscillate back and forth at least 20 times. If this is repeated with oil in the dash pot, the oscillations will drop to 5 or less. This provides a quick method for checking the oil level in the pot. Set the dial at zero. Displace the code disc the equivalent of 1/2" rain and let go. If it damps out quickly, the oil is up to the needed level. If the oscillations are not damped, more oil is needed.

(9) Two bolts with nut locks pass through the base, and can be adjusted so that they limit the downward travel of the front support arm. The longer bolt is used to hold the front support arm in its highest position during shipping. All slack is then taken **out** of the main spring by tightening the zero adjust. This bolt is removed or backed all the way out of the way on installation. The shorter bolt is used to limit travel during operation. This is set at 19.5” at the plant.

Section B

CODE DISC DRIVE

Refer to Figure 2.

(1) The vertical motion of the front support arm is converted to rotational movement through the use of two cables and a pulley. Each cable is attached to the pulley and makes a partial wrap around it. The bottom cable is permanently attached to the lower part of the front support arm. The top cable end is fastened to the upper portion of the front support arm through a tension spring. This spring keeps an equal tension on both cables thereby, eliminating any errors resulting from cable slack.

(2) The pulley has removable disc side guides. These can be removed by loosening the set screws which hold them in place. The cable ends are held in place in this pulley by two set screws. The cable wrap has a definite rotation. See Figure 3.

(3) There is a definite mechanical indexing between this pulley, the code disc, and tens punch arm which will be explained later (see Section B, paragraph 5). To replace a broken cable proceed as follows.

a) Remove the cable ends from the front sup-support arm.

b) Remove the cable ends from the pulley by loosening the set screws in the rear face of the pulley. Small chuck type extension handles are available for allen wrenches. It is possible to remove and replace these set screws without removing any additional parts by reaching in with one of these from the rear. See Figure 3.

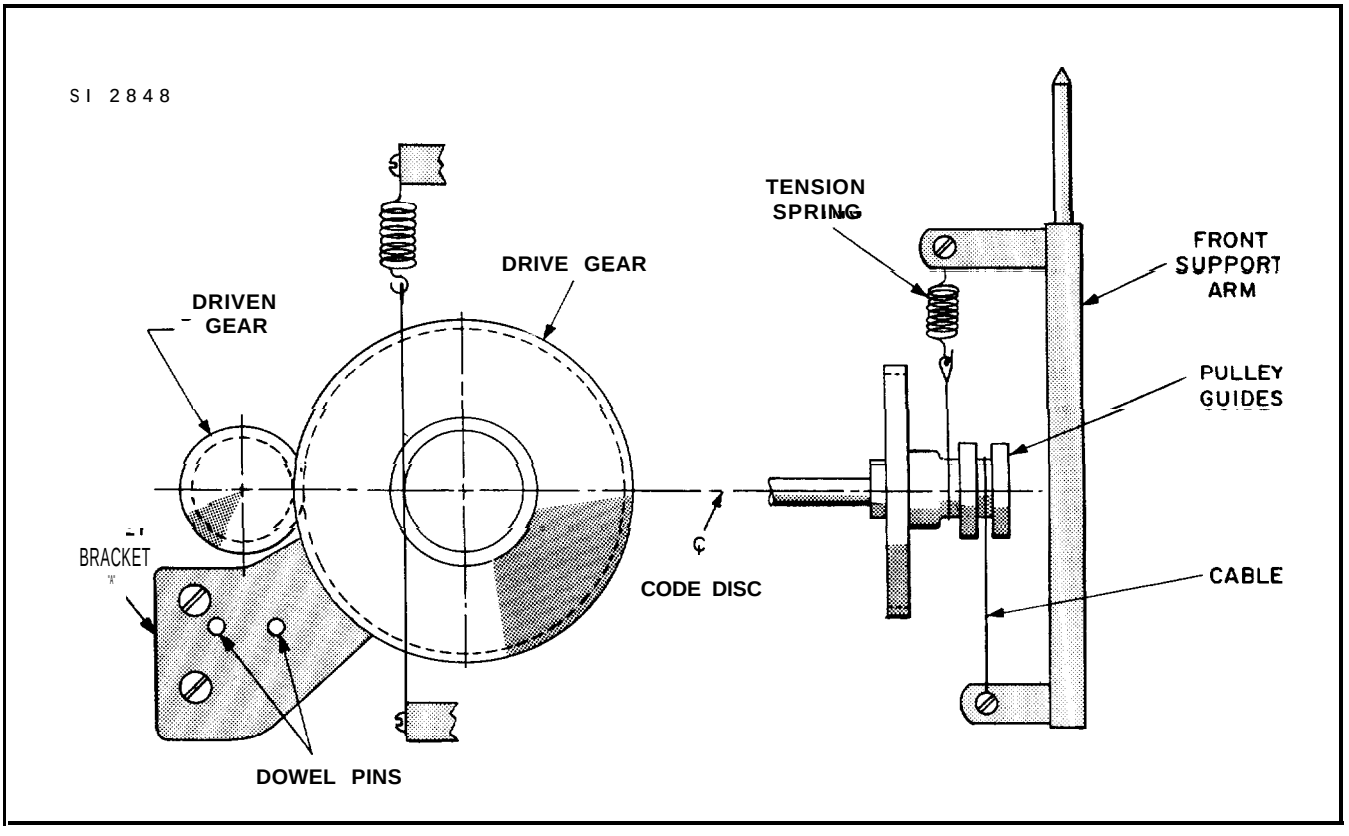

FIGURE 2 CODE DISC DRIVE

c) Set the code disc at "0"; (See Section D, paragraph 10), initiate a punchout, the tape must read 00.0. If the tape reads 10.0 rotate the code disc clockwise one revolution and repeat the punchout. If the tape still reads 10.0 continue to rotate the code disc clockwise one revolution at a time until tape reads 00.0. This is true zero. If the first punchout indicated 00.0 rotate the code disc counterclockwise one revolution at a time until 10.0 is punched out. Back off one revolution clockwise. This is true zero. Place a piece of masking tape on the code disc to hold it firmly in position.

Caution, if this procedure is followed with the cables affixed to the pulley end, and loose at each other end, there is a danger that the cable will get caught in the gearing. This usually ruins the cable.

d) Slip the sleeved end of each cable into the pulley and tighten their related set screws at the rear face of the pulley.

e) Using the directional diagram shown in Figure 3 reinstall cable ends to the front support arm.

(4) The one piece pulley and large drive gear rotate in a bracket which is mounted to the recorder housing by means of two screws and two dowel pins. See Figure 2, bracket "A". The mating driven gear is mounted on, and drives the code disc shaft. The backlash between these gears is controlled by the doweled position of the bracket. Any burrs or foreign particle between these two gears will cause insensitivity or dead spots, as will any binding in the mounted bearings.

(5) There is a definite index between the pulley position and the code disc position. This is set at the plant and can only be changed by loosening the two bracket mounting screws and pulling the bracket back off the dowels until the gears become unmeshed. A mismatch of these gear teeth will result in a gage where it will be impossible to reach both ends of the scale, zero and 20". One type of misalignment will let the front support arm hit the base before 20" is reached. The other extreme will allow the dash pot piston to hit the lower side of the base, thereby, restricting the upward movement of the front support arm so that zero is never reached. Conversely, if this problem is experienced with a gage, the gear teeth relation must be changed.

To change this relationship the two bracket mounting screws must be loosened and the bracket pulled off the dowels until the gears become unmeshed. The code disc is rotated to the 10.0 inch position (see Section B, paragraph lc). The large input drive gear is rotated until the two cables are protruding out of the pulley to the right and 20° down from the horizontal as the pulley is observed from the rear. The gears are meshed by pushing the bracket back on the dowels and the two bracket mounting screws are tightened.

Section C

CAMSHAFT

Refer to Figure 4.

(1) The camshaft which runs across the top side of the Punched Tape Recorder schedules the sequence of events which are performed during punchout. It is driven by a motor which through the use of two switches (motor switch on camshaft and microswitch on the timer), rotates 360 degrees. This is divided into two steps (1) punchout which requires approximately 300 degrees, and (2) recock which requires the remaining 60 degrees.

(2) There are five drives generated from the rotation of this camshaft. Looking from the motor side:

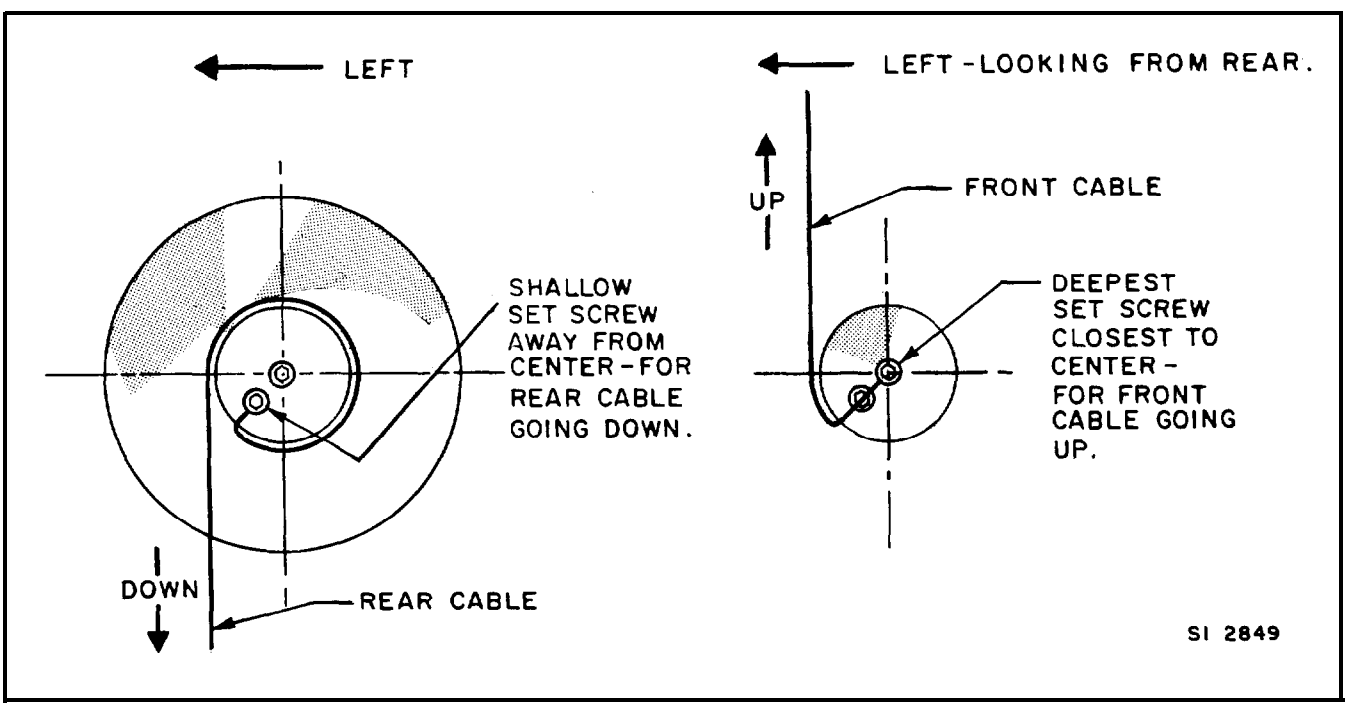

FIGURE 3 PULLEY POSITIONS

a) The first cam is a combination coupling and motor switch cam.

b) The second drive is a nylon eccentric which actuates the paper advancement lever.

c) The third drive is a nylon cam which actuates the punch arm.

d) The fourth drive is a sheave or pulley which is used to roll up the data tape through the use of a spring belt.

e) The last cam actuates the rocker arm which powers the code disc lock out.

(3) The four nylon cams mount on a hex shaft. There is a definite required indexing between the paper tape advancement cam, the punch arm actuating and the coded disc locking cams. Molded witness marks (.030" wide x .015" high) have been placed on the cams to facilitate assembly and service. When placing cams on the drive shaft caution should be taken to insure that these witness lines line up and are offset 60° clockwise with the drive pin (looking from motor end). Allow approximately 1/32" total end play between the stacked cam assembly and the bearing blocks.

(4) The motor switch cam can be assembled in two positions. For proper operation the drop off section of this cam should be in the same quadrant as that of the punch arm actuating cam. If the cam is installed in its other possible position (180° out) the recorder will stop during punchout with the punches engaged. This can cause bending of punches.

(5) When installing motor be sure the motor switch cam is free from binding. It should slide freely along the shaft. It is possible to free up a bound cam by shifting the motor position before tightening the mounting screws.

Section D

CODE DISC

(1) The code disc has hills and valleys on the front face (see Figure 5). When a punch hits a hill it punches a number. When it enters a valley it does not punch. The hills are so arranged that one revolution of the code disc will produce 100 count. The code disc is only capable of producing two decimal digits, therefore, in the case of the rain gage the code disc produces numbers from 0.0 through 9.9" when rotated 99% of a revolution. On completion of a full revolution the code disc starts aver at 0.0. The third digit of "tens" is necessary from another source.

(2) A gear and arm assembly (see Figure 6) is driven by the low order code disc through appropriate gearing so that the arm is in back of the tens punch when needed. Now when the low order code disc rotates 99% of one revolution it will punch 9.9" on the tape. When the code disc goes through a complete revolution it will punch 0.0", but the lever will add the 1 to the third decimal column, thereby, recording 10.0". The lever will stay in this same position through the second revolution of the code disc, thereby, providing a "1" which will pre-

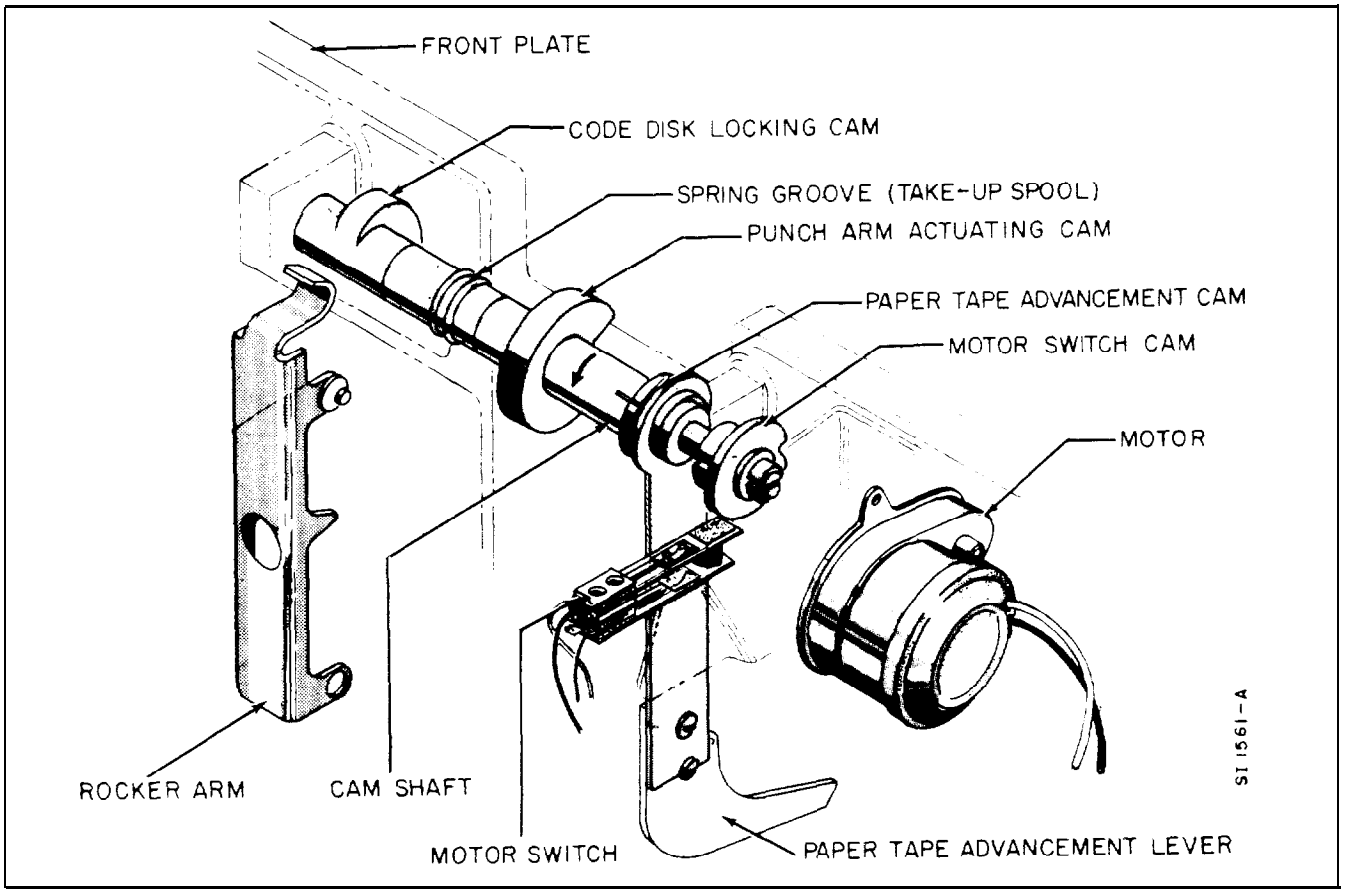

FIGURE 4 PROGRAMMING CAMSHAFT

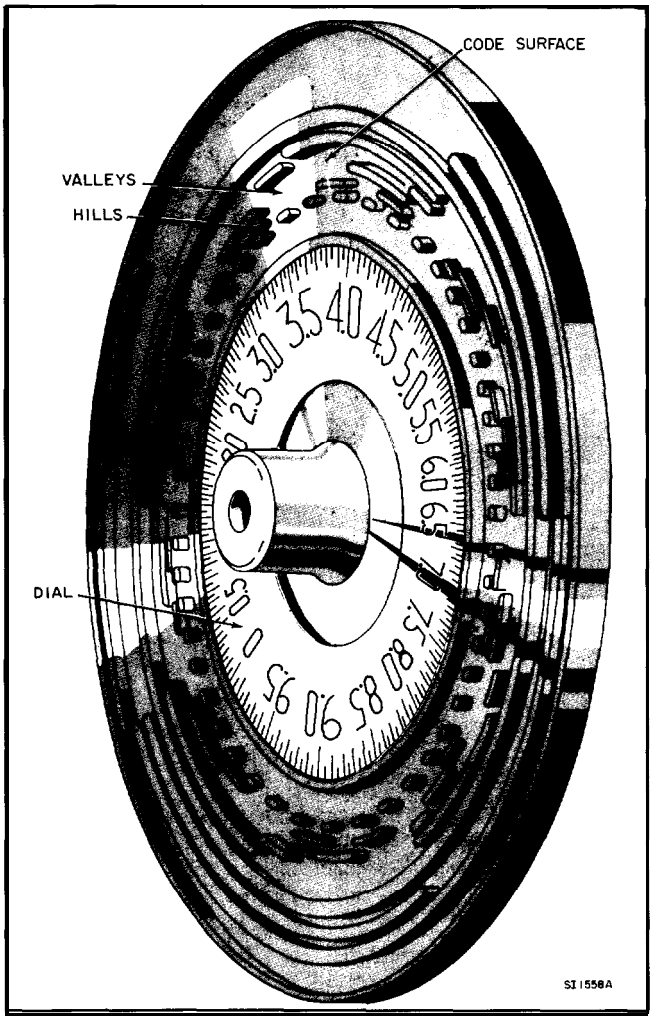

FIGURE 5 CODE DISC

cede the 0.0 x 9.9 generated by the second revolution of the code disc. This will record as 10.0" through 19.9" the maximum limit of the gage.

(3) It would be very difficult to arrange a straight gear ratio between the code disc and this arm so that the arm would not be in back of the punch when the code disc was at 99 and would move into place when the code disc went to the next highest 1/100 of a rotation. Instead, we use a worm gear on the code disc shaft which by construction must turn with the shaft. It is free, however, to slide laterally on the shaft when forced against a spring which normally holds it in place. The gears are aligned so that the arm is trying to get in back of the punch through the first revolution of the code disc, 0.0 through 9.9 and is continuously being pushed back out of the way by a linkage which moves the worm gear laterally. When the code disc goes through the 0 position at the completion of the first revolution a linkage senses this and does not push the worm and, therefore, the arm remains in back of the punch. (For complete description of this linkage operation please see Section D, Paragraphs 6-10).

(4) In order to insure that the code disc does not move during punchout it must be locked during this operation. To do this a 100 toothed detent wheel is affixed to the back of the code disc. (See Figure 7). A locking lever with a sharp leading edge enters the detent wheel and locks it in place at any one of the 100 possible positions.

(5) Refer to Figure 8. The sequence of positions presented in Views A through E illustrates how a downward and forward motion is imparted to the locking lever.

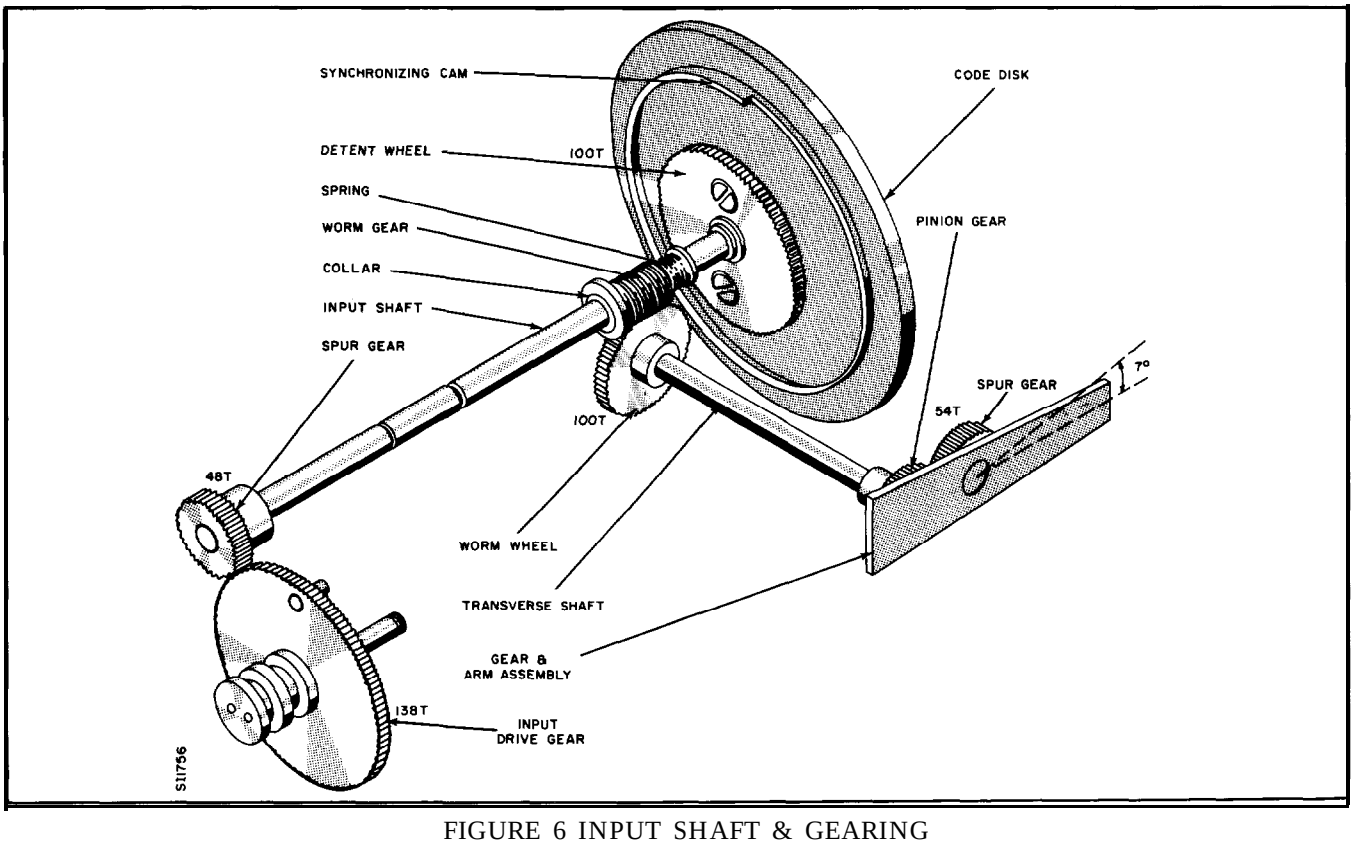

FIGURE 6 INPUT SHAFT & GEARING

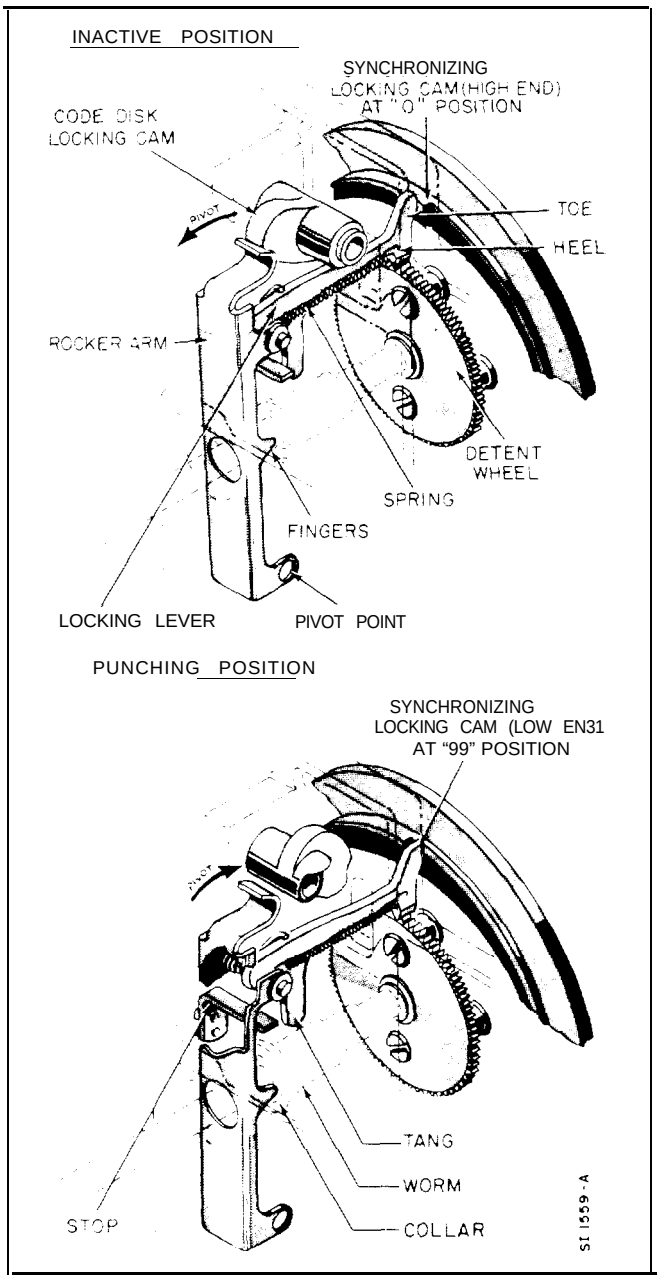

FIGURE 7 CODE DISC LOCKOUT

View (A) The rocker arm pivots at the bottom, is pulled toward the detent wheel by the tension spring, and has its forward movement controlled by the cam. The locking lever is attached to, and can pivot about, the rocker arm. A tang protrudes down from the bottom side of the locking lever. It cannot move from the position shown as the tang is contacting the stop. Note the leading end of the locking lever clears the top of the detent teeth.

View (B) The punchout operation has started. The cam has revolved allowing the rocker arm to pivot forward. The tang sliding across the stop is imparting a forward and downward motion to the leading end of the locking lever as it enters the detent teeth from the top.

View (C) - The locking lever leading edge has fully engaged the deient tooth. It has bottomed in this tooth so that no further downward motion is possible. Further forward motion of the rocker arm -will move the locking lever forward only.

Views (D) & (E) - Show the locking lever moving towards the synchronization cam which is cast on the back of the code disc.

View (F) - Show the leading end of the locking lever striking the cam on the back of the code disc. Note that the rocker arm is not striking the cam, and that the height (H) of the cam on the rear of the code disc is controlling the forward travel of the locking lever, and in turn the rocker arm. Also note that fingers on the rocker an-n are pushing the previously mentioned worm gear forward. The height of the face cam on the back of the code disc (H), therefore, also controls the movement of the worm gear and the correction given to the arm assembly in back of the 10 punch.

(6) Refer to Figure 6. We can now further discuss the linkage which controls the action of the gear and arm assembly that back up the 10 punch. As pointed out above, the axial movement of the worm gear, backs the arm assembly away from the 10 punch when required. The movement of the worm gear is directly proportional to the height of the synchronizing cam on the back of the code disc.

(7) As the code disc starts from "0.0" the arm assembly is not behind the 10 punch, therefore, no correction is necessary. The worm gear will not move when this value was punched. The fingers on the rocker arm should be just touching the worm gear. The synchronizing cam on the back of the code disc would, therefore, be the largest at this point (zero).

(8) When the code disc has revolved to 9.9", or 99% of one revolution, the gear ratio between the code disc and the arm will have moved the arm well in back of the 10 punch and maximum correction is needed. The synchronizing cam is, therefore, lowest at 9.9. This will allow the locking lever to move forward its maximum amount, in turn pushing the worm gear to its maximum travel position. The height of the synchronizing cam between these two points is proportional to the disc rotation.

(9) Inspection of Figure 6 shows an abrupt drop off of this synchronizing cam from its highest value to its lowest. (The synchronizing cam title arrow points just to the left of this spot.) When the code disc has rotated to 10" the gear drive will have moved the arm well in back of the 10 punch. The high part of the cam will prevent the worm from moving, and no correction will be made to the lever position which will now punch the 10 digit.

(10) There is a definite index between the zero location on the front of the code disc. When the locking lever has engaged a tooth in the detent wheel so that it overlaps the abrupt drop off of the

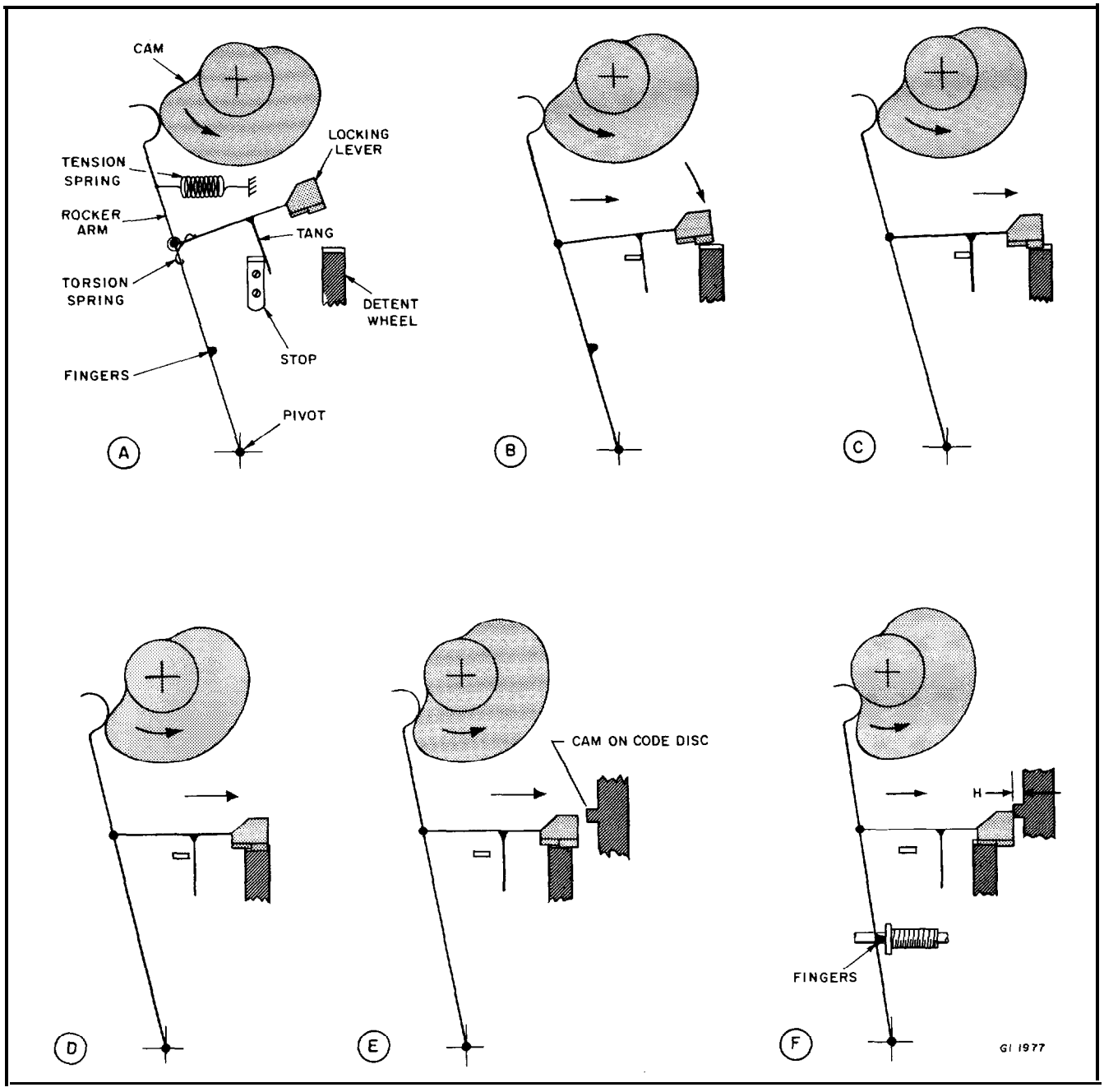

FIGURE 8 CAM POSITION RELATIONSHIP

synchronizing cam the unit is at true zero. (See sketch below.)

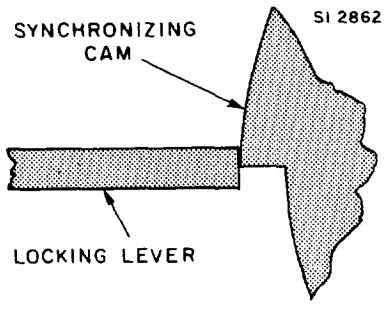

TOP VIEW

This is the correct position to set the zero pointer on the dial.

Section E

CODE DISC LOCKING & INDEXING

(1) The locking lever, while locking the code disc, also insures that the correct hills are centered under the punches. Please refer to Figure 9. View A shows the sharp toothed edge of the locking lever entering the #2 tooth space of the detent wheel. As shown here the lever edge will strike the side of the detent tooth #2, and rotate the detent wheel, and attached code disc, counterclockwise until the center line of the locking lever edge and the center of tooth space #2 are aligned. The code disc is now in a position where the correct hills will be directly under the related punches.

(2) There is a remote chance that the locking lever may strike the detent wheel exactly on the top of a tooth and remain there throughout the

punch cycle. (View B) This would position the hills on the code disc exactly between numbers. An erroneous number would be punched, and a bent punch would probably result, as the punch would strike the side of a hill. In order to prevent this, advantage is taken of the entrance motion of the locking lever. As previously described, it enters the tooth from the top rear and slides forward. A dual angle locking lever (View C) was designed to have a leading edge of 60°. the same as those shown in Views A & B. This angle extends back for approximately .09". (See side View D) A second, blunter angle is cut on the rest of the lever so that its knife edge is some .02" offset. (See View C) Under normal circumstances the 60° leading edge will do the indexing. If the leading edge sticks on the top of the tooth it will remain there only until the locking lever moves forward enough LOS") to expose the rear angle at which time the point of the rear angle will not line up with the top of the tooth, and the lever will fall in place. View D shows the leading angle of the locking lever entering the detent tooth and riding on top of it. As it moves forward it will get into the position shown by the dotted detent tooth where the leading angle cannot be held up by the detent tooth.

(3) In order to insure that the leading edge of the locking lever always enters the tooth, the stop which controls the downward descent of the locking lever must be adjusted correctly. Refer to Figure 8, View A. The stop shown here has liberal clearance between the two screws and the mounting holes. By loosening these screws the stop can be moved forward or back. The stop should be set so that the lever just clears the detent teeth when the rocker arm is in its most retarded position. 1/64" clearance is advised. The closer the better but you must be sure it clears all teeth. If this drags ever so slightly it can cause insensitivity. The lever end motion is downward and forward. If the lever is set too high to start, it may be far enough forward when it enters the tooth that the leading edge never hits the detent wheel.

Section F

TAPE TRANSPORT

(1) The data tape is fed from a supply spool at the base of the recorder, retained against a drive sprocket by a paper retaining clamp or tape guide on Design Sequence A2 instruments, passes through the punch block, is guided by an upper guide post, and is collected on the take up spool.

(2) The take up spool is spring driven so that it will wind up a minimum of 2.5" of tape each punch out. The drive sprocket is driven so that it permits the paper to feed .1" each punch out. The result is that the spring drive will slip and the paper between the take up spool and the sprocket is always kept under controlled tension. This is necessary for proper punching.

(3) If the spring inadvertently becomes stretched it will allow the spool to slip at a lower driving force resulting in a reduction of tape pulling force. This will cause a mispunch. The spring is joined by coupling the two loops at each end. If these loops are extended the spring loses effective drive area as it passes over the small drive shive on the cam shaft. This can cause mispunching until the coupling is out of this area. The coupling should be as close as possible. This condition can be corrected by rebending the loops.

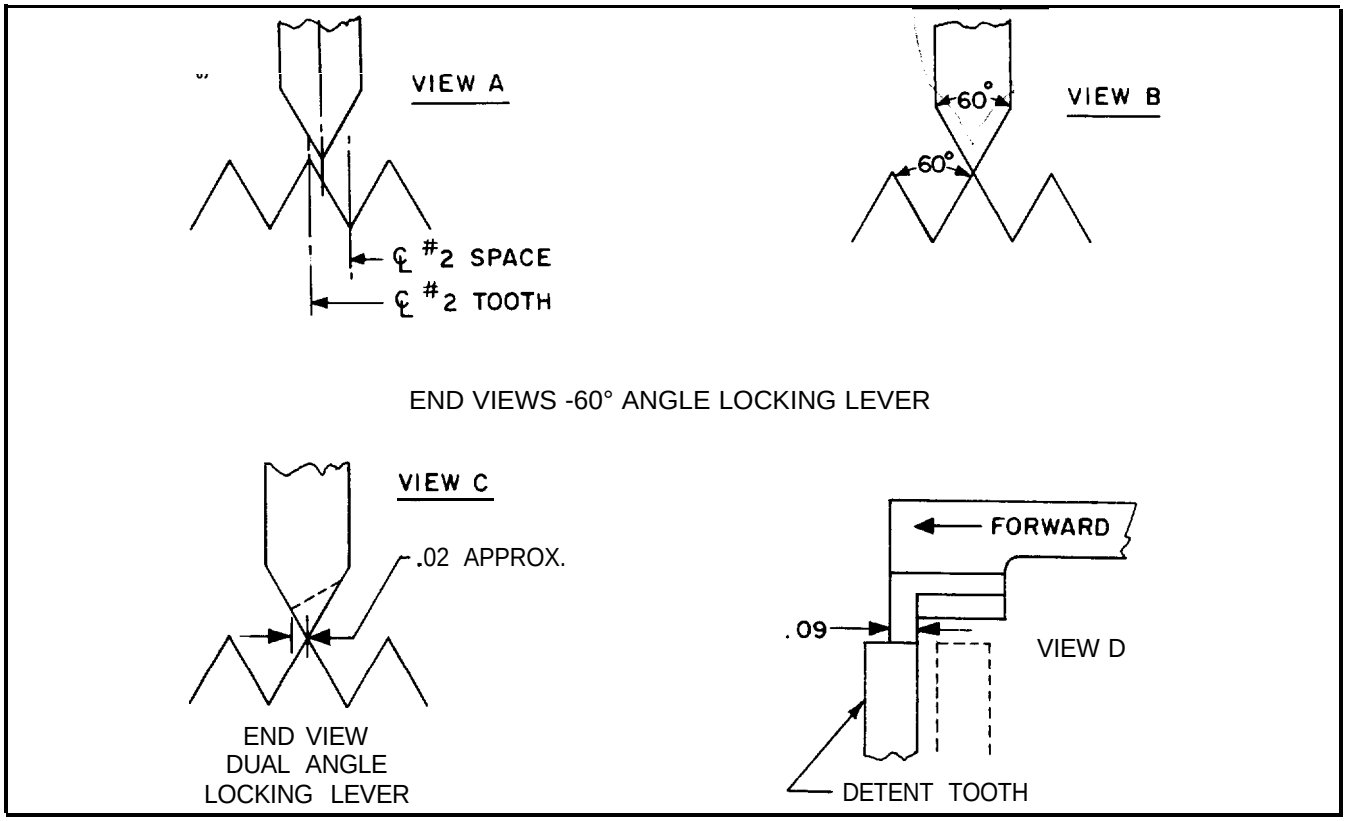

FIGURE 9 CODE DISC INDEXING

(4) The take up spools on the 35-1558 and 35-1559 precipitation gages and Design Sequence A2 instruments with 5-minute punchouts, have a round sheet metal side piece on the pulley side and a guidance bar on the left side which extends up from the guidance pin directly under the spool. These side pieces insure an even wind up of the paper. If either bind on the side of the paper it will disturb the alignment and cause the paper to mispunch.

(5) The early take up spools had a slot and a pin which locked the starting end of the tape in place. The latest design has a wide slot and no pin. The paper is locked in place by inserting approximately 1" of tape in the slot and wrapping the tape around the spool until it overlaps the inserted end at least once. It has been recommended that the pins be dispensed with on the older models.

(6) The take up spool bracket on the 1548 is of a different design than the 1558. In order to insure proper paper transport the tape should pass under the guide pin on both models. The bracket, spool and guidance assembly on the 1558 gage is directly interchangeable with the older 1548. Squareness of the bracket and spool assembly is a must in assuring proper punching.

(7) The drive sprocket has twenty pins which index with the prepunched holes in the center of the recording tape and as it rotates controls the advancement of the tape. It has 40 teeth which are driven by a feed pawl. This feed paw1 advances the sprocket one tooth each punch out. A tension spring acts on the side of the sprocket (see Figure 10, View A) retarding its advancement. The feed paw1 advances the sprocket against the retarding action of this spring giving the system a detent

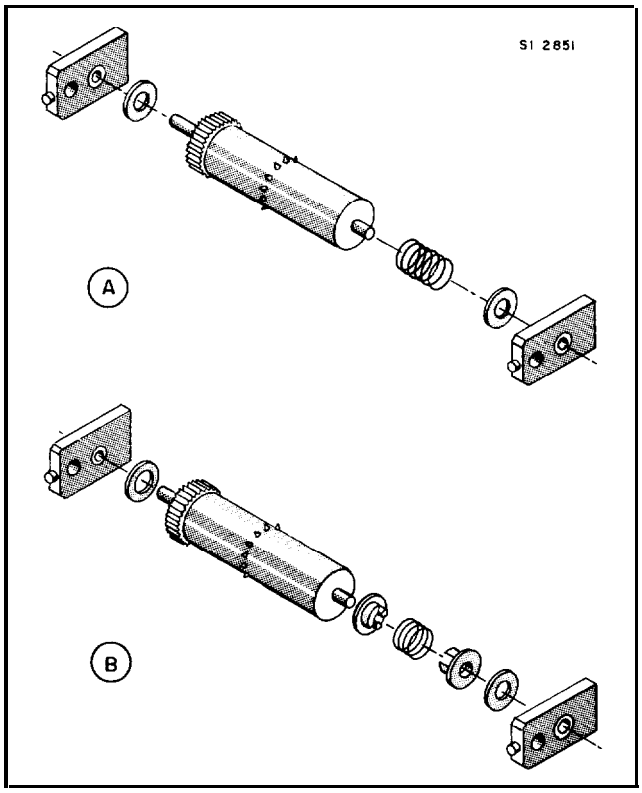

FIGURE 10 TAPE ADVANCE SPROCKET

(8) Each time the sprocket advances it causes a slight torsional winding of this spring. Normally, the paper tape imposes a forward pull on this sprocket and this stored energy is released by the shock of punchout. Without this pull of the paper the sprocket is prone to jump backwards on punchout. Experience has shown that any sticking of the taper prior to the sprocket can tear the holes enough to allow the sprocket to back up and occasionally miss a tooth advancement, the feed paw1 driving the same tooth twice instead of advancing. Aged foil backed tape was found to be this type offender. When this malfunction occurs sometimes the punches hit exactly in the same place. This appears as a timer error. Other times it causes the tape to advance in only small amounts, the resulting mispunched tape apears to be torn or laced. Design Sequence A2 instruments have a spring retainer to prevent the torsional windup of the spring (see Figure 10, View B).

(9) Each step advancement is accomplished by the end of the feed paw1 pushing against a tooth, rotating the sprocket, retracting and dropping off into the next tooth ready for the next step advancement. The dropping from the top of one tooth to the bottom of the next sometimes causes a slight nick in the tooth, if the feed paw1 end is too sharp. If the feed paw1 catches this nick instead of advancing to the edge of the tooth on the next advancement the tape will be advanced more than l/10" from the preceding punch and less than l/10" on the next punch. This possible malfunction has been eliminated by the use of an all stainless steel sprocket on the later models. Missed punches spaced 40 spaces apart are indicative of a bad sprocket tooth. Replace sprocket.

(10) The tape roll is mounted on a spindle in a bracket at the base of the recorder. Figure 11, View A illustrates the type used on the 1548 (small door) gage. The upper, Item 3 portion of the bracket is spring loaded against the tape forcing it to the rear. This worked satisfactorily until the roll of tape got real small. It would then unwind too quickly relaxing the tension between the paper and the sprocket. The paper would then slip off the sprocket pins and. mis-index, causing mispunching. The 1558 (large door) had an extra spring mounted on the top of Item 3 which keeps constant pressure on the paper while it engages the sprocket. Design Sequence A2 instruments provide a different tape feed spool assembly that provides tension to the tape and is illustrated in View C. Item 4 screws into item 3 to hold the roll of tape securely and provide tension.

(11) If the tape rides off the new Series Al design it is due to one of two possible causes.

a) The drive pins in the sprocket are not straight.

b) The spring is not bearing evenly on each side of the paper.

The correction for the bad pins is to replace the sprocket. The correction for the distorted spring is to bend it back into position.

With respect to the Design Sequence A2 instruments, if the tape rides off it is due to one of the following causes: a) the tape spring is not bearing evenly on each side of the paper. b) the tape spring

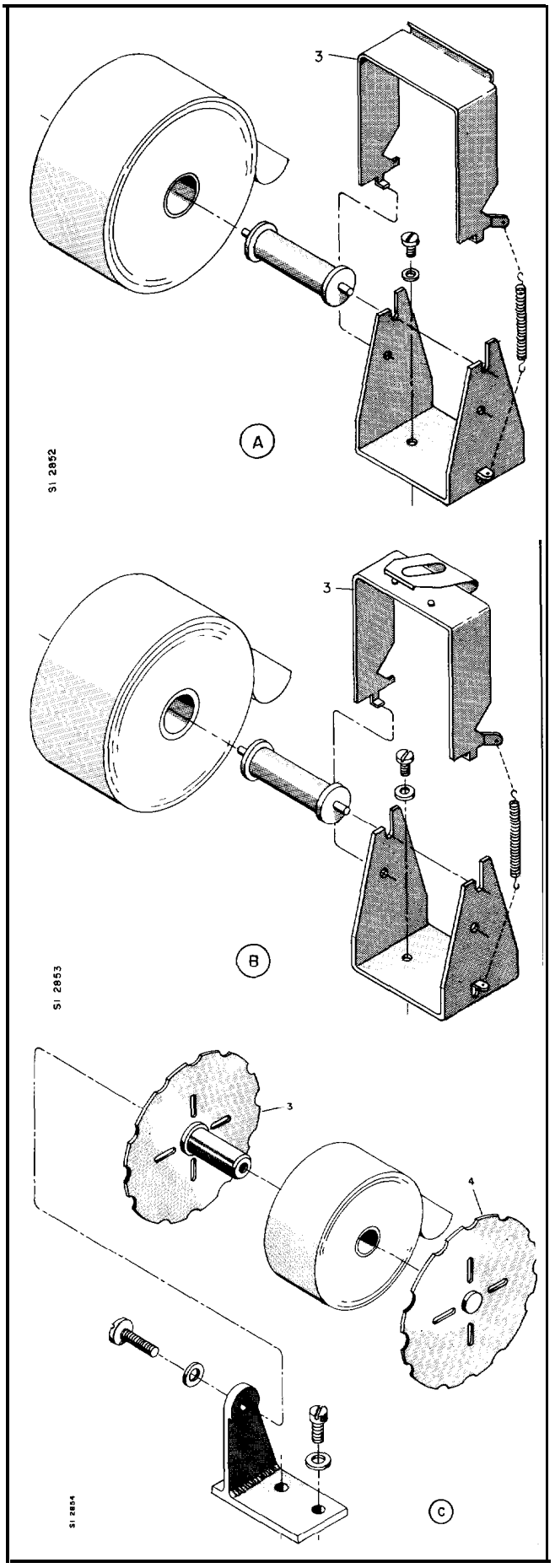

FIGURE 11 TAPE SUPPLY SPOOL

is bearing with too much force on the paper. c) the supply spool is not aligned properly with the sprocket.

To correct a) or b), loosen the screws holding the tape spring and adjust so that it just touches the paper evenly on both sides. To correct for c) loosen the screws holding the tape supply spool bracket and adjust the bracket until the paper tape rides on the sprocket with equal clearance between the holes and sprocket teeth on both sides of the teeth.

(12) The top bracket, Item 3, sometimes becomes disassembled from the bottom by having the small pivot tabs jump out of place. The latest Design Sequence Al has a lock in tab on the end.

(13) The feed paw1 is driven by an eccentric on the camshaft. It is held against the sprocket teeth by an extension spring which pulls it towards the front plate. Refer to Figure 12. A tab on the top end of the paw1 will hit the top of the front plate before inadvertent backward movement of the paw1 can overstress the spring.

(14) The length of the feed paw1 determines the relative punch position on the tape. The length of the paw1 can be changed by loosening the two screws which hold the two piece assembly together, changing the length, and retightening. This adjujstment serves no other purpose than to place the punched holes on the lines. Note: It is not necessary that the holes be centered on the line perfectly. The automatic translator can not recognize these lines. They are on the paper only for visual inspection, therefore, if the line intersects the hole at all you can tell the time of punch. Adjust only when the punch misses the line entirely.

(15) Experience has shown that a short feed paw1 has a better angle of attack on the sprocket and can, therefore, provide positive indexing.

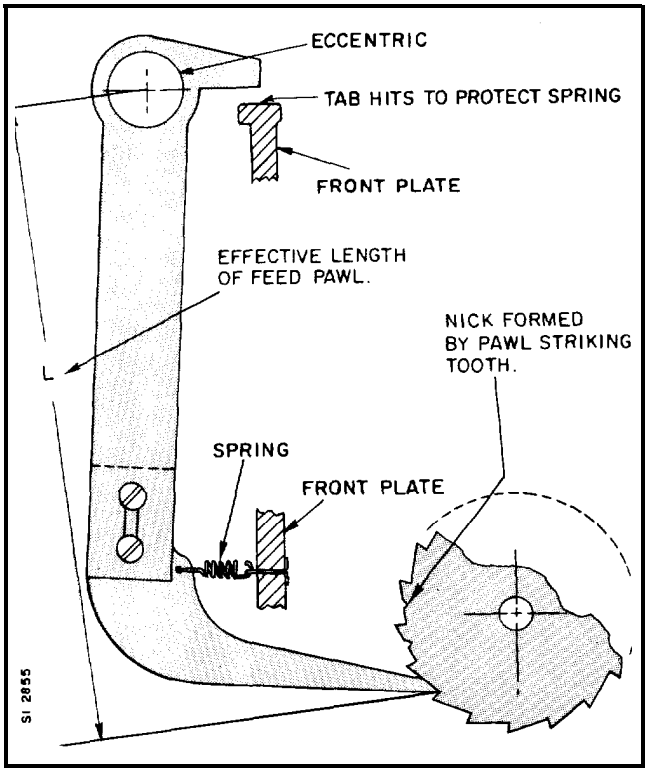

FIGURE 12 TAPE ADVANCE MECHANISM

(16) The two adjusting screws which screw into the bottom half of the feed paw1 have clearance in the slot in the top half. It is possible to loosen the screws (which were in the original position as shown in Figure 13, View A) lengthen the lever by moving the bottom half downward, but by invertently cocking the bottom relative to the top so that the screws rest on opposite sides of the slot, still have the same effective length of the pawl. (See View B).

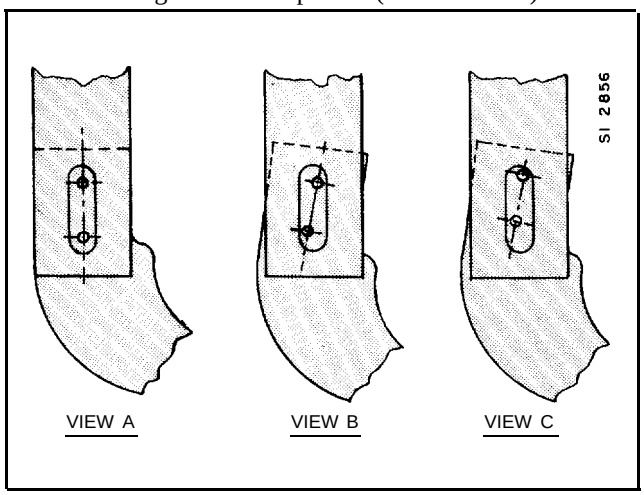

FIGURE 13 FEED PAWL ADJUSTMENT

(17) Based on the above the feed paw1 should be adjusted as follows, if needed.

a) Loosen the screws, cock the bottom lever relative to the top so that the screws rest on opposite sides of the slot and while in this position shorten the lever as much as possible. (See View C, Figure 13.) Tighten the screws and check for punched hole position relative to the lines on the paper. Punch out a few times, the first punch is not always correct as all the take up tensions may not be correct.

b) If the holes still miss the lines, loosen the screws, and holding the lever cocked as in View C, lengthen the lever slightly. This step should provide the correction needed.

Section G

PUNCHING MECHANISM

(1) The punch die block is mounted on a punch arm. (Refer to Figure 14.) This sketch is exaggerated to illustrate the functions. The punch arm pivots at the bottom, is pulled towards the front plate by the force spring, and is pushed away from the front plate by the cam and follower at the top.

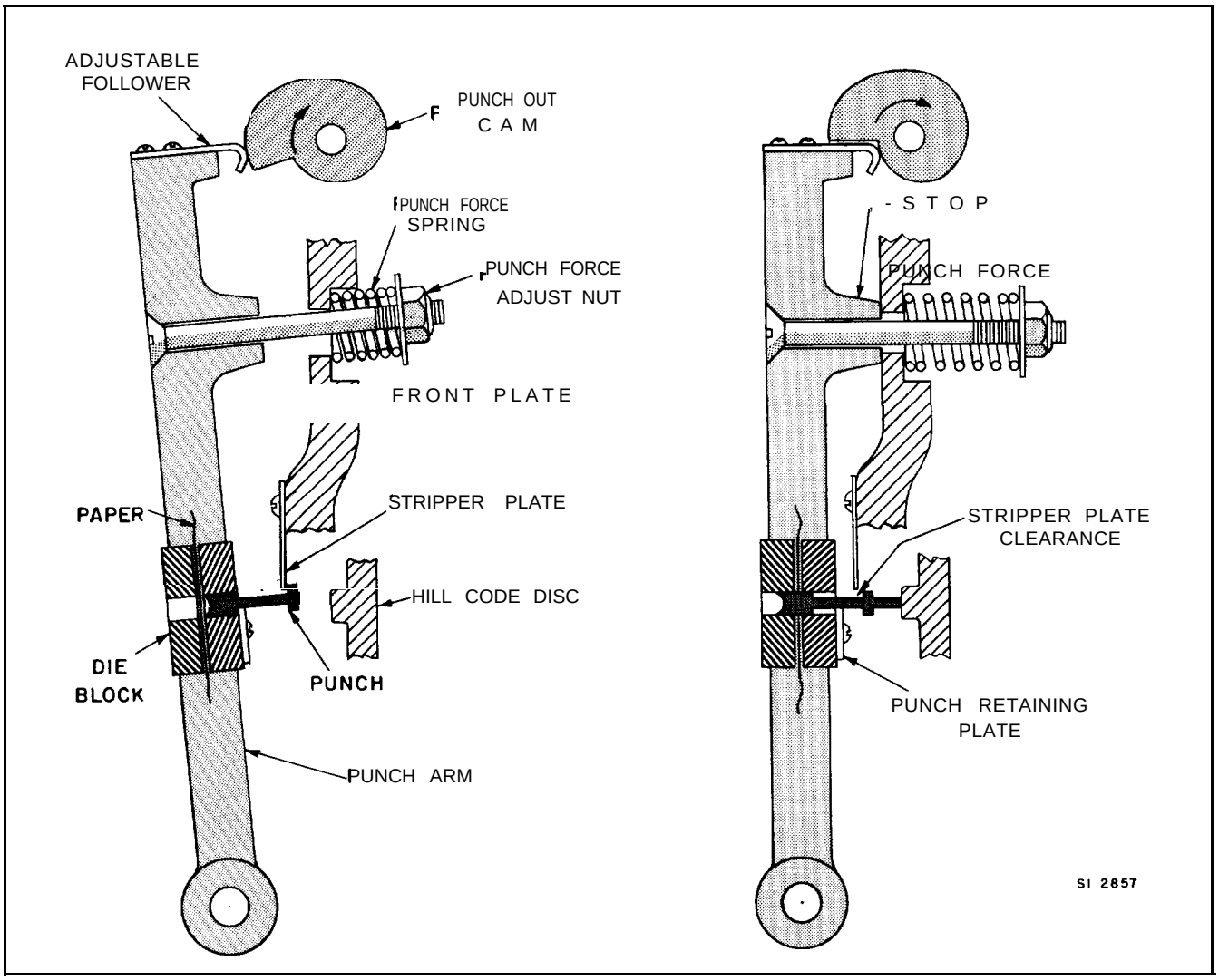

FIGURE 14 PUNCHING MECHANISM

(2) View A of Figure 14 shows the punch arm retracted, the cam is at its highest point, the force spring is compressed. View B shows the cam rotated so that the follower fell off allowing the spring to pull the punch arm inward. The punch shown has hit a hill on the code disc which has forced it through the paper, thereby, punching a hole.

(3) Figure 14 also shows a view of the punch in the disc block. The punch is a round shape in the area in the block. It is flat in the areas shown as thin and round again in the area shown as a step or tab. The punch retaining plate holds the punches in the block. The stripper plate is mounted on the front plate of the recorder and is stationary relative to the punch arm.

(4) The punch fit in the die block is close. When the punch pierces the paper it will stick in place and must be pulled out or retracted. View B, Figure 14 shows the punch through the paper. Note the stripper plate does not touch the punch. As the cam turns the punch arm is pushed out until it reaches the position shown in "A". Note that the tab on the punch catches on the stripper plate and is pulled out of the die block as the arm is pushed out.

(5) The punch die blocks are bolted together, located one from the other by a shim and held in line by a dowel pin. The holes through the two die blocks are machined as an assembly so that one half of one block is not interchangeable with any other half.

(6) The punches are thin in the flat area and can be bent by overpowering the position of the code disc while it is locked. This can only happen when someone is attending the gage. The automatic scheduling of the recorder will not allow the code disc to move when the punches are contacting it. Picture the arm in a punched position as shown by Figure 15. The punch shown is recording zero so that it has not hit a hill and is in the valley next to a hill. Note the hills directly above and below it. If someone should inadvertently turn the code disc, they could easily overpower the locking lever and bring the hill down on the punch, bending it.

(7) Most punches can be straightened by removing the die block assembly from the punch arm and bending the punch back with your fingers until they are free to move in and out without binding. ***Do not*** remove the punch from the block. ***Do not*** use long nose or any kind of pliers to accomplish this. Remove a punch from the die block only when you have decided to replace it.

(8) As mentioned above the retaining plate on the die block captures the punches. This can be removed by taking out the three screws that hold it in place. Once removed the punches are free to fall anywhere and they usually do. A good idea is to retract the punches by holding the block so that the retainer plate is on the bottom and allowing the punches to fall. If one is bent or stuck, pull it down. Place a piece of data tape through the block and turn it over on the table with the retaining plate up. When you remove it in this position the punches will not fall through and you can conveniently replace the damaged punches. The punch clearance is very close, usually less than .0005". You may occasionally get a new punch that will not fit the hole you need it for. If you shift the punches around you usually can make them all fit properly. When replacing the retaining plate be sure to allow sufficient clearance so that the punches are free but are all held captive in the block.

(9) Punches can also be bent by a misadjujsted stripper plate. The stripper plate is mounted by three **screws** to the front plate. It has slotted holes and can be adjujsted up and down before tightening the screws. (Refer to Figure 14.) Note in View B that there is a clearance between the stripper plate and the punch, but in View A there is not. This is due to the geometry of the **system** as the punch arm rotates outward the punch rises. If the stripper plate is adjusted so that there is no clearance when the

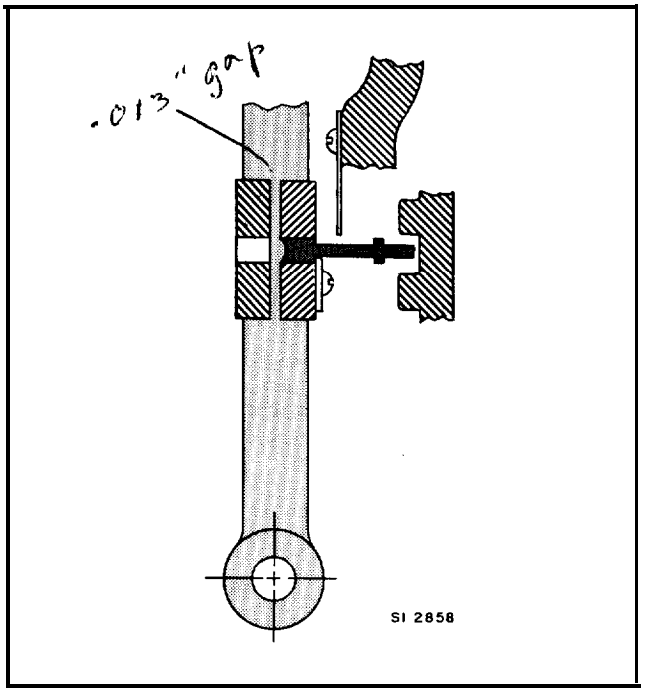

FIGURE 15 ARM IN PUNCHED POSITION

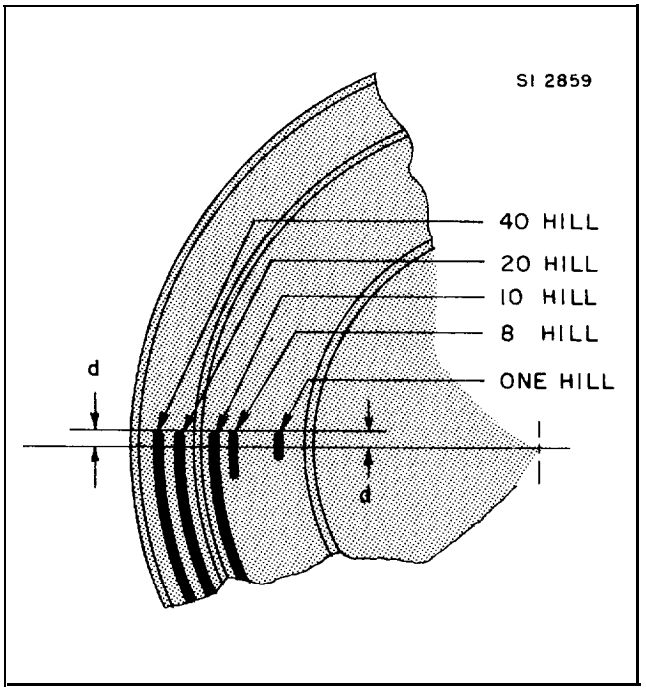

FIGURE 16 CODE DISC ALIGNMENT

punch arm is in (View B) it will bend the punches when the arm moves out (View A). An adjustment hint is to loosen the screws that hold the stripper plate in place and allow the plate to fall under its own weight. Pull the punch arm out to its most outward position (View A), this will raise the plate without doing any damage. Tighten the screws while the arm is in this retracted position. When the punch arm is allowed to return to punch position (View B) the proper clearance between the punch and stripper plate will automatically be obtained.

(10) The die block assembly is mounted to the punch arm by four screws. There is some clearance between these screws and the holes in the die block. Some alignment is, therefore, possible when replacing a die block. Place the code disc on number 79 and note that the "one" punch should be hitting the "one" hill (small hills on inside of disc) right in the middle. The forty punch (one hitting hill on the next to the outside of disc (see Figure 16) should be the same distance (d) from the end of the hill as the punch on the "one" hill. If not, cock the punch die block until it is, and then tighten the screws.

(11) The die block assembly contains a shim which separates the two blocks enough to allow the paper to pass through. This shim is held in place by the tight fit of the two blocks on the dowel pin when the block is off the recorder. When it is assembled to a recorder the mounting screws pass through the shim and positively lock them in place. It is possible for these shims to cock since there is some clearance between the size of the screws and the holes in the shim. Figure 17 illustrates this possible condition. Make sure the shims are square as shown in View A after final tightening. Cocking of this shim can cause interference with the tape movement and result in miss punching. The latest design shim has this clearance reduced.

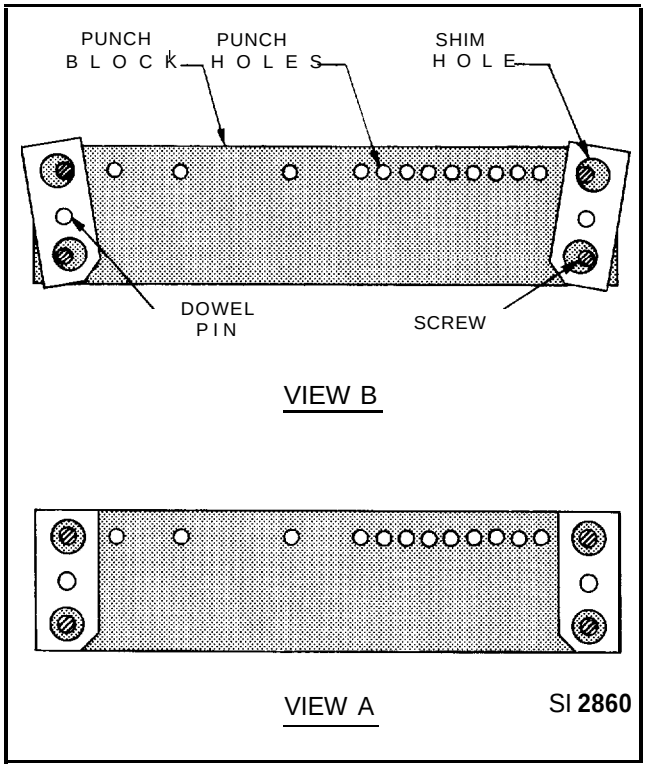

FIGURE 17 PUNCH DIE ALIGNMENT

(12) The cam follower at the top of the punch arm is held in place by two screws. The follower is slotted so that it can be adjusted in and out. Adjustment of this follower is a matter of feel and, therefore, it is recommended that the punch force spring be removed before this adjustment is made. With the cam in its hightest position (View A, Figure 14) adjust the follower so that the arm is as far out as you can get it without stressing the stripper plate. Note from View A that the arm could be pushed out by misadjustment to the point where the punch tab would pull on the stripper plate until either the stripper plate bends or the punch bends and snaps out from under. When this happens the particular punch which escaped will remain in the paper on a punch out and will jam the tape. When adjusted properly the punch arm will stop on the front plate, the cam follower not touching the cam (See View B, Figure 14). The actual unit has a nylon button, not shown in Figure 14, which absorbs the shock of the punch arm hitting the front plate. The last check is to be sure the punches clear the code disc when the arm is retracted (View A, Figure 14).

(13) The older model precipitation gages had a roller follower and bracket. These sometimes wore a nick in the nylon cam. If this should happen replace this roller follower with the later design sheet metal follower shown in Figure 14. The cam need not be replaced.

(14) The tension setting on the punch force spring is important. If it is set too light it will not punch clean. If it is set too high it will overload the motor and possibly strip the gears in the gear box. As an aid in making this adjustment it is recommended that a 5/16 socket wrench be used to hold the nut. Place the code disc and high order lever so that it is at 177. Tighten the punch force adjusting nut 1/2 turn at a time until a clean punched tape results, and then tighten the nut 1 1/2 additional turns.

(15) Telemetering contacts can be added to the back of the punch arm so that a contact closure will be obtained each time a number is punched. Figure 18 illustrates the method used. The printed circuit card contains contacts, one for each number, which are wire connected to a terminal board. The contact arm is a series of springs connected to ground potential. View A, shows the punch arm retracted. Note there is no contact between the contact arm and the contact. View B shows the punch arm in the punch position. The punch has pierced the paper, and the tab on the punch has pulled the contact spring forward until it bends around the contact. This contact arm is spring material so that this bending does not adversely affect it, but does insure a good contact closure. This closure indicates electrically the number punched in the tape.

(16) The printed circuit card shown on Figure 18 is mounted to the punch arm with three screws at the bottom, the three screws at the top securing it to the punch block. On the older (1548) design this board also served as a punch retainer. If this board moves during adjustment the punches get free. The later design does not use this method. The standard steel retainer plate is used to retain the punches. The printed circuit card is shorter being held to the punch arm with the same three screws at the bottom and clipped to the punch block by a clamp that uses

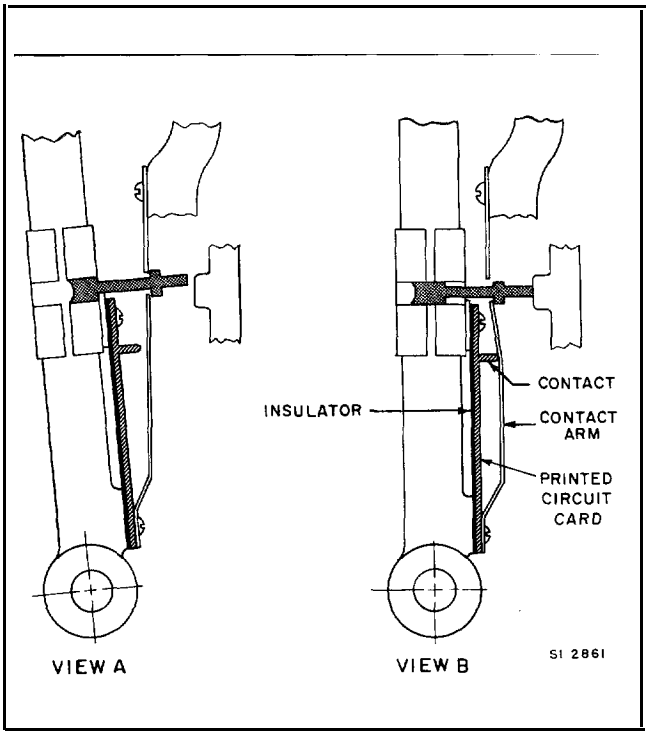

FIGURE 18 PUNCH ARM WITH TELEMETERING

the center screw on the die block. On disassembly or adjustment of this design the punches are always held captive. Figure 19 shows an exploded view of the parts used in the latest design.

(17) Note from Figure 17 that the contact arm end is always held captive behind the shoulder on the punch. When adjusting care must be taken to insure there is a slight clearance between the punch and the contact arm end when the punch arm is retracted (View A). If this fit is tight it may cause the punch to jam and result in mispunching. If it is too loose the end may snap out on punchout (View B).

(18) On the older design first adjust the position of the printed circuit card in a position so that it retains the punches properly. The board is slotted so that it can be moved up and down and secured by the three screws that fasten it in the punch die block. Once this is in place adjust the position of the contact arm tips so that clearance to the punches is correct. Then fasten the bottom three screws.

(19) The new design is simpler in that the only adjustment is the locating of the contact arm relative to the punches using the bottom three screws. The top clip being tightened as a final step.

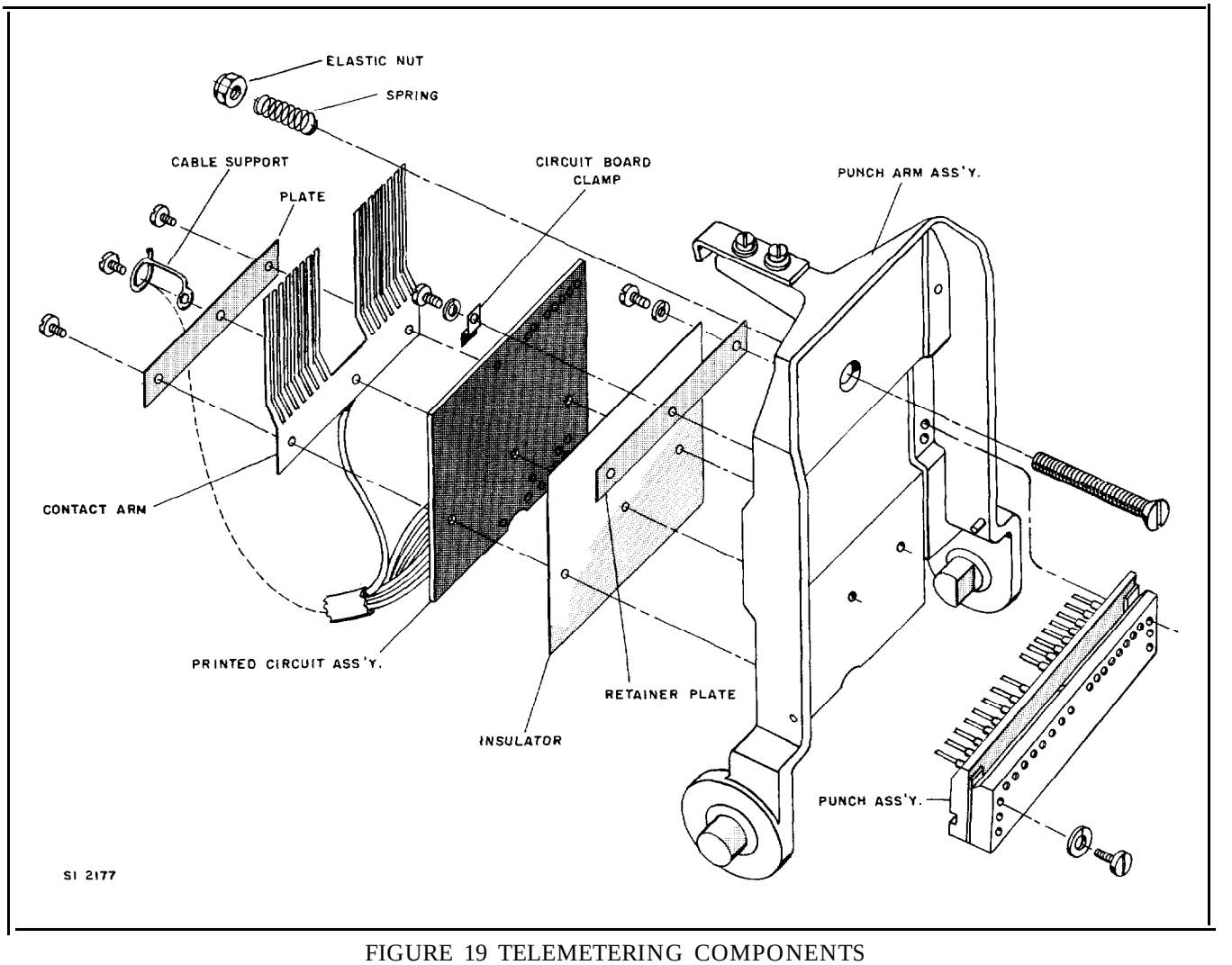

FIGURE 19 TELEMETERING COMPONENTS

Section H

ELECTRICAL

(1) The basic electrical scheduling of the punch-out is simple and works the same as a three way light switch. For comparison refer to the schematic sketch given for these switches. It is apparent the light can be turned either on or off by either switch - upstairs or downstairs.

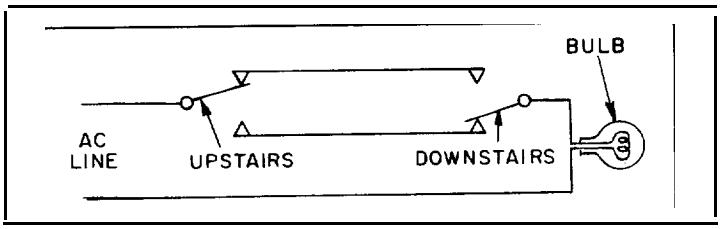

Home position just prior to punch out.

Actuating lever drops from high to low portion of timer cam; timer switch operates applying power to punch motor thru punch switch contacts. Punch motor operates.

Punch motor operates thru 85% of motor switch cam rotation completing actual punch out. Punch motor switch drops from high to low portion of motor switch cam. Punch motor stops.

50% of time cycle later, actuating lever rides to high portion of timer cam: timer switch operates reapplying power to punch motor thru punch motor switch contacts. Punch motor operates.

Punch motor operates thru remaining 15% of cam rotation moving recording tape to next increment. Punch motor switch moves from low to high portion of motor switch cam. Punch motor stops. Home position.

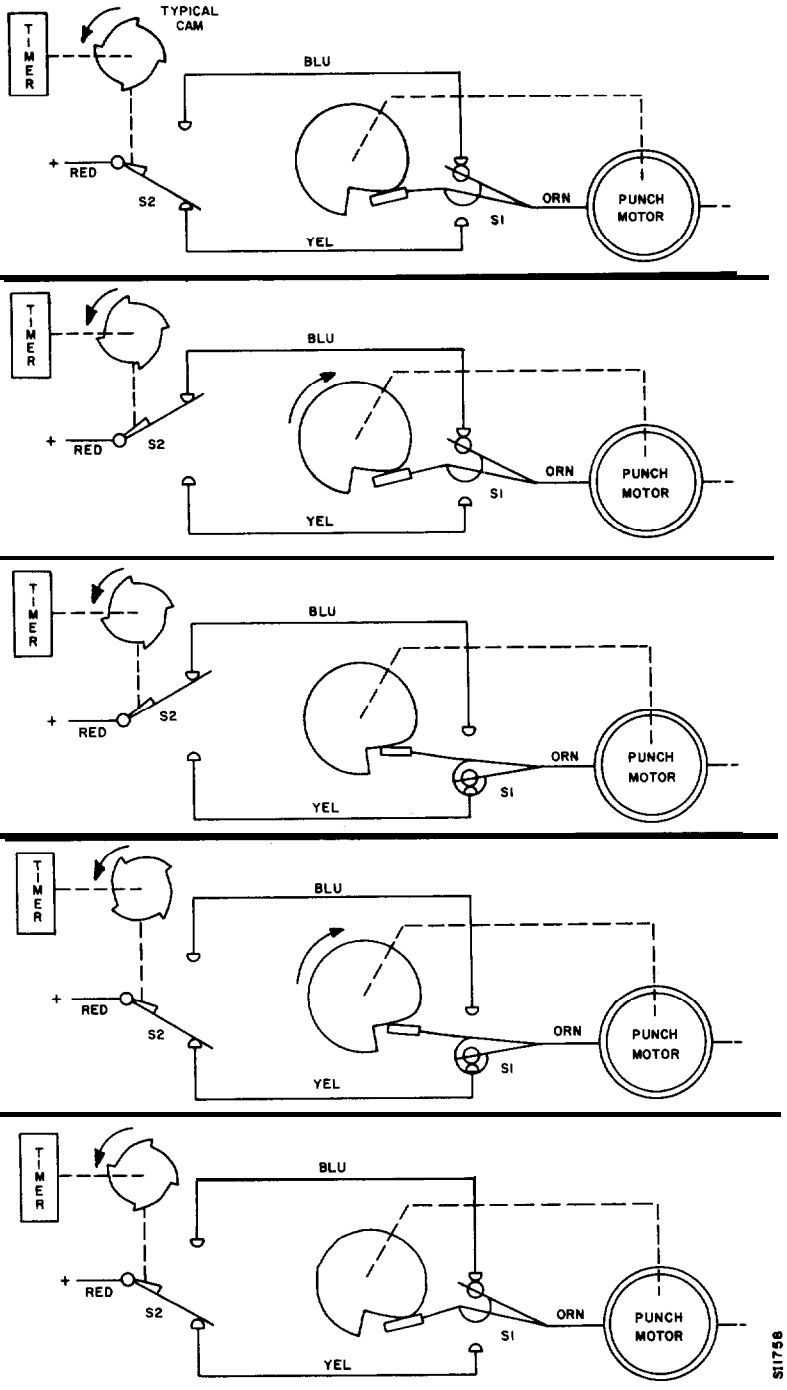

FIGURE 20 TIMING CYCLE

The same principle is used on the precipitation gage as shown below -

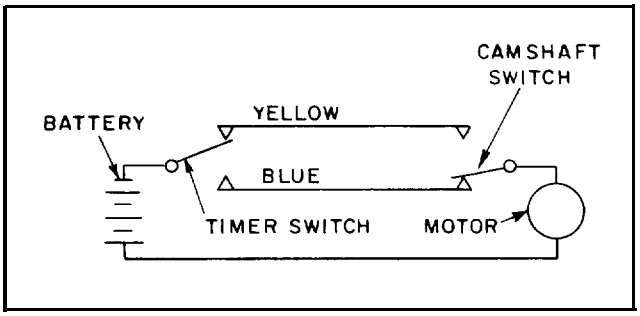

(2) A clock driven cam allows the timer switch to fall and complete a circuit to the motor through the blue wire. The motor rotates until it drives the cam shaft approximately 85% of a revolution. (This is the punch cycle.) At this time the cam shaft switch drops into the valley in the camshaft scheduling cam, breaking the circuit, and stopping the motor. As time passes the timer cam again raises the time switch completing a circuit through the yellow wire. (This is known as the recock cycle as it puts both switches back in the "ready to punch out condition".) The camshaft scheduling cam is designed so that it quickly flips the camshaft switch allowing the motor to turn the camshaft approximately 15% of a revolution.

Note: Whenever there is current in the blue wire the unit will punch. When the current is passing through the yellow wire the unit will be going through the recock cycle. Figure 20 illustrates schematically the functional operation of these switches.

(3) A good rule of thumb. If the recorder won't start, it's in the timer switch; if it won't stop, it's the camshaft switch.

(4) The actual circuit used in the 1559 model is shown by the schematic Figure 21. It has some refinements over and above the schematic presented above. The following will describe the purpose of each.

a) The switch at the **bottom** left between terminals (3) and (1) is used, to turn the unit on or off. It breaks the negative leg of the circuit.

b) The diode CR1 allows the current to flow in one direction only. DC motors rotate in different directions depending on the polarity of the current. If the (+) and (-) leads of the battery are inadvertently connected backwards this diode would block the current flow. If allowed to pass the camshaft gear motor would run in a reverse direction, breaking the camshaft switch and stalling the motor as the punch arm would jam in the recess in the cam. This could ruin the gear tram of the gear motor. The timing motor across (+) and (-) is within the clock and runs only when the clock needs rewinding.

c) The diode CR2 connected in parallel with the punch motor is used to suppress the arcing on both the timer and camshaft switches. This prolongs their contact life.

d) The motor and switch circuit shown in the middle of the figure is the same as the circuit previously discussed. S2 is the timer switch, Sl the camshaft leaf switch.

e) The pushbutton switch S3 shown on the top line to the left of (B) is used to manually punch out the recorder. When these contacts are made the motor will run as long as the switch is held closed. Note that it bypasses the timer and camshaft switch circuit.

f) The light DSl is in the line to indicate which cycle you are in. When the unit is being operated with the manual punch switch S2, the lamp lights when you are in the punch cycle. The camshaft switch has two sets of contacts Sl shown in the motor circuit and Sl shown between (A) and (F) in the lamp line. These contacts move together as they are manually coupled as indicated by the dotted line. The line between S2 and Sl through (E) is the punch cycle (blue wire). The motor circuit contacts of Sl must be in the position shown when the recorder is punching out. The contacts of Sl in the lamp line will also be in the position shown when the unit is punching out. The lamp will, therefore, light only when the unit is punching out.

g) The resistor Rl between terminals (B) and (H) is in the lamp circuit to reduce current flow and, therefore, increase the life expectancy of the bulb.

The light DSl, and resistor Rl, are both omitted on Design Sequence A2 instruments (see Figure 21).

h) The diode CR3 between terminals (B) and (C) is used to block an unwanted current flow. As stated above the lamp will light each time the unit punches out when actuated by the manual push button. With the S3 push button switch open this diode blocks the current flow from (C) to (B) when the recorder is punching out on a time scheduled punchout. Without this the lamp would light on every punchout. Follow the circuit for normal punchout; S2 through blue wire, through terminal E, through Sl to C (if the diode were missing) back to terminal B. This would put plus potential on the bulb and it would light. We do not want this.

(5) The schematic for the 1548 gage differs slightly as follows.

a) The extra leads from the circuit to terminal board TB2 shown across the bottom of the diagram are for telemetering entry to the circuit. They do not affect the basic circuit other than the jumper between TB2-A and TBP-B must be in place to complete the circuit when telemetering is not used.

b) The motor switching circuit and the diodes CR1 and CR2 serve the same purpose as the 1559 diagram.

c) The switching circuit to the lamp is slightly

different in that it uses a double throw push button switch S3. The objection to this switch was, that being double, it was harder to push.

(6) The mechanical timer has a diode across the winding of the motor to provide arc suppression across the contacts of wind switch. If this diode fails "open" the contacts lose this protection and their life may be reduced. If it fails "closed" it will provide a short and drain the battery. This is the most usual reason for battery draining quickly.

(7) Any shorting of the timer base to the rain gage frame will cause a direct short and will cause the diode CRl, between terminals (1) and (-), to fail. This is the prime reason for failure of this diode.

(8) Figure 22 shows the diagram for the 1558 AC gage. This is the same as the 1559 DC gage except the mechanical clock is eliminated and a transformer and power supply is shown on the left side of the diagram.

a) The AC current enters on terminals (2) and (3). It has a switch and fuse Fl in the line.

b) The timing cam of this design is run by a synchronous timing motor connected directly across the AC line. The dotted line indicates the mechanical connection between this timer cam and the switch S2.

c) The primary of transformer Tl is also connected directly across the AC line.

d) The secondary of the transformer is connected across a diode rectifying bridge CRl.

e) Resistors Rl and R2 and condensors Cl and C2 form the filtering portion of the rectifier circuit. The resulting voltage at the (+) and (-) terminals is approximately 81/2 volts D.C. while the unit is punching out.

(9) The schematic for the 1558 instrument using an electronic timer is illustrated in Figure 23.

a) A timing pulse fires a silicon controlled rectifier (SCR), inside the electronic timer case at the end of the proper time interval. The SCR conducts current to the punch motor which in turn operates through the recock cycle.

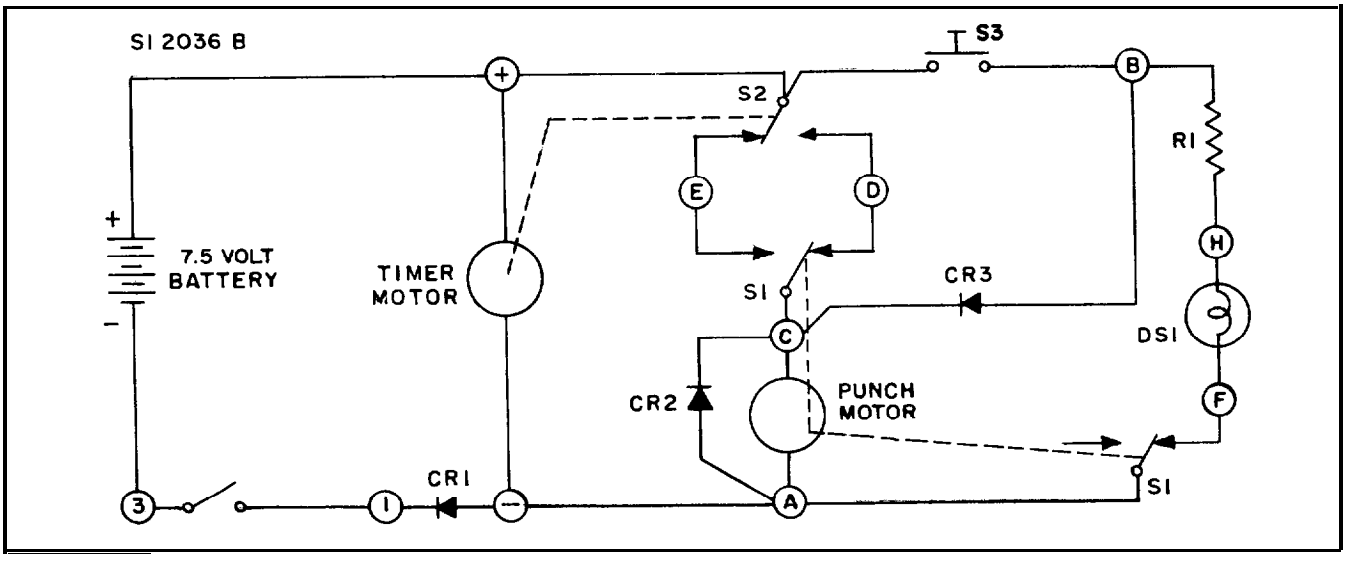

FIGURE 21 SCHEMATIC DIAGRAM: SERIES 1559 (DC)

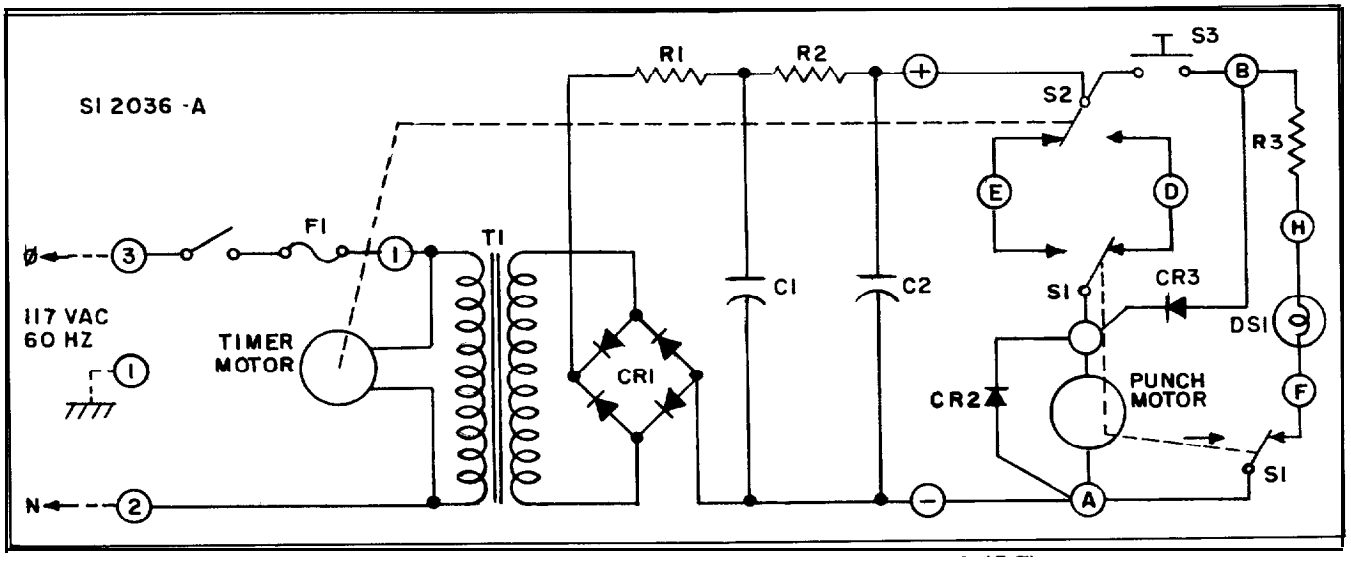

FIGURE 22 SCHEMATIC DIAGRAM; SERIES 1558 (AC)

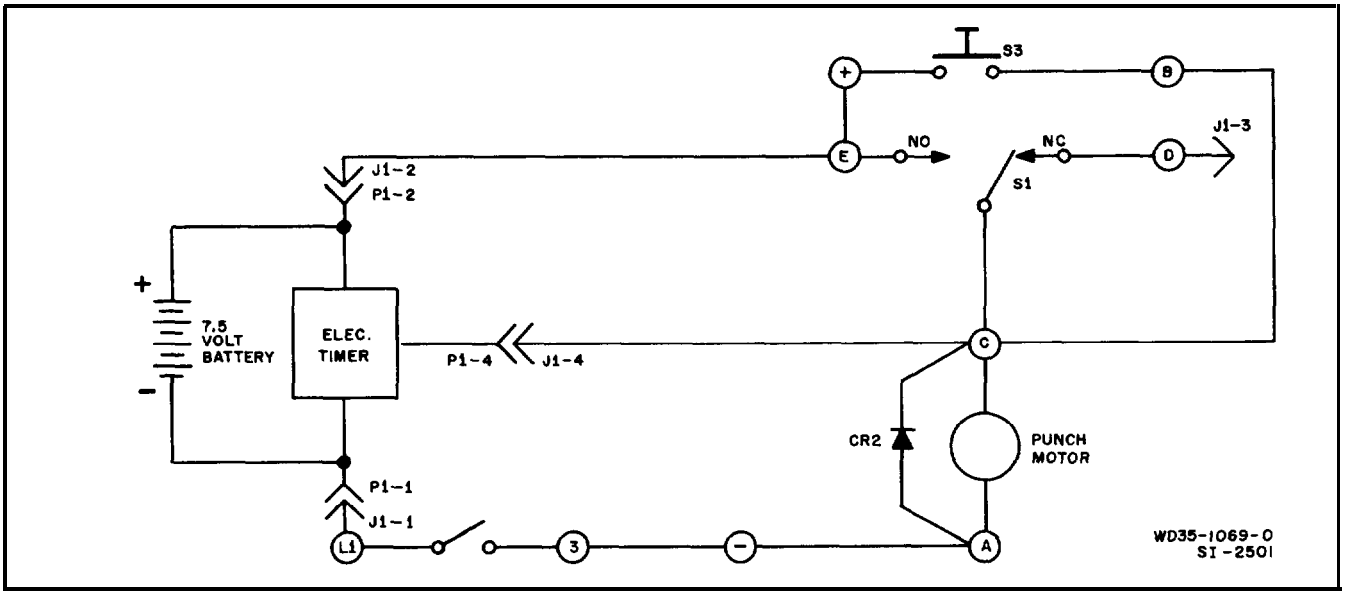

FIGURE 23 SCHEMATIC DIAGRAM; SERIES 1559 (DC) WITH ELECTRONIC TIMER

b) At the end of the recock cycle, the leaf switch, Sl, snaps over and directs current to the punch motor and provides positive voltage to the timer SCR that stops its current flow and causes the SCR to "turn Off".

c) The punch motor then runs through the punch cycle. At the end of the punch cycle, the leaf switch opens and the current to the motor stops. Since the SCR has already been shut off, it will not provide current to the motor until it is fired again by another pulse.

d) The manual punch out switch, S3, when depressed, directs current to the punch motor. The motor runs through the recock cycle. At the end of the recock cycle, the leaf switch snaps over and provides current to the punch motor which then runs through the punch cycle. During the punch cycle, the pushbutton can be released.

Section I

TIMER

(1) There are three types of timers presently used on Fischer & Porter Ram Gages. One is a synchronous motor, another is an electrically wound mechanical clock, the third is a solid-state electronic timer. The synchronous motor is used on the AC gage and is shown on Figure 24.

(2) The timer switch is mounted above the cam and its relative position is adjustable by loosening the two screws which fasten its mounting plate to the timer bracket. This adjustment is critical on the DC timer in that torque output from the mechanical clock mechanism is low. The switch should be set so the recock cycle of the gage occurs between 1 and 1 1/2 minutes before punchout or between 6 and 8 minutes before punchout when using the new delrin cam. Check each lobe of the cam to insure the switch is being actuated correctly by each.

(3) The original design gages had fingers on the end of the microswitch follower arm as shown in View A, Figure 25. These were found to rub on one side or the other, increasing the frictional drag, which either slowed down or stopped the clock. The later followers do not have these fingers. Any followers of the old type on DC units should be replaced.

(4) The original white timer cams supplied with the earlier gages sometime had a rough edge. It is advised that these be smoothed out with a file so that the cam surface presented to the follower is as smooth as possible. The newer black cams have a smoother surface but the same reasoning applies. If its the least bit rough smooth it out.

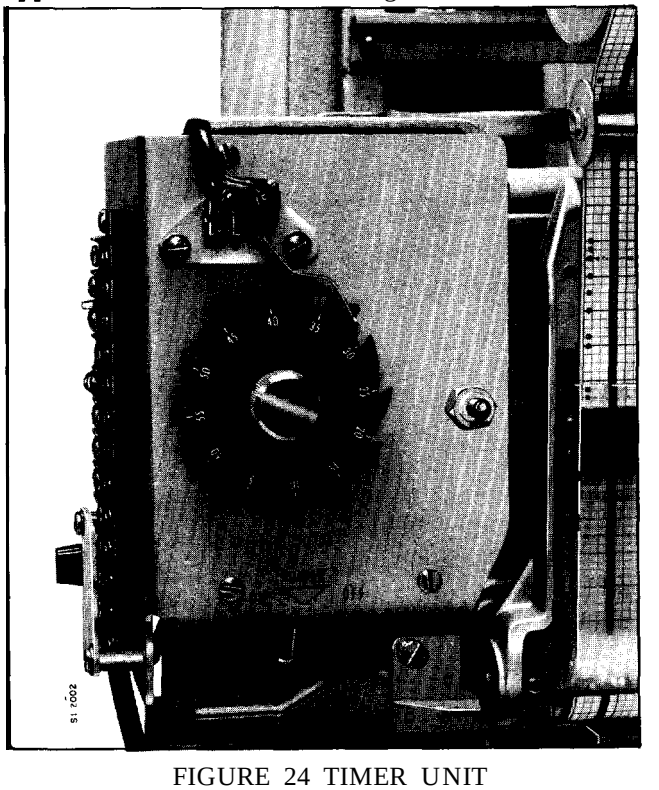

FIGURE 24 TIMER UNIT

(5) The cam follower is relatively thin sheet metal and can easily be bent. The follower edge should be as square to the cam surface as possible. See View B, Figure 25. The exaggerated cocked position shown could cause extra drag as the lever is riding the edge which is more susceptible to nicking. View C shows proper squareness. This can be attained easily by bending the follower arm.

(6) The timer switch mounting bracket can be assembled to the switch in two ways, View D, Figure 25, shows the correct way. The red microswitch actuating button is on the left side of the switch center close to the lever pivot point. If the switch is inadvertently installed backwards the red button will be to the right side of the switch center line (View E) and further away from the lever pivot point. This will double the force that must be sup plied by the timer cam and could cause it to lose time or stop.

(7) Development in microswitches has provided us with a new switch which although it is the same size and interchangeable with the old switch, requires much less force to actuate it. Gages in the field have both type switches. Considerable improvement will be realized from the use of the newer switch. The F&P part number for the old switch is 154E00lU01, microswitch part number lSM1. The Fischer & Porter number for the new switch is 154E099U02, microswitch number 11SM-233-T. The new switch must be used with the new delrin cam. It is easy to determine which switch is which in the field without disassembling as they changed the wire terminals. The old switch has three posts with holes for the wires while the new switch has wrap around pin terminals. (See Views F & G, Figure 25.)

(8) The mechanical clock supplied with the DC gage is manufactured by Ergas. The minute hand shaft has a square threaded section on which the cam hub mounts. This square section is necked down from a larger diameter round shaft. This shoulder provides a stop for the cam when it is fastened in place with the rubber lock washer and special knurled nut. Normally, this shoulder is outside the threaded mounting boss of the clock. There is, therefore, clearance between the cam hub and the clock boss. See View A, Figure 26. It was later discovered that this shoulder is below this boss on some clocks and when the nut is tightened in place the cam hub rubs *on* the clock boss either slowing or stopping the clock Special washers are available with a square or round hole which should be used to shim the cam out so that there is approximately

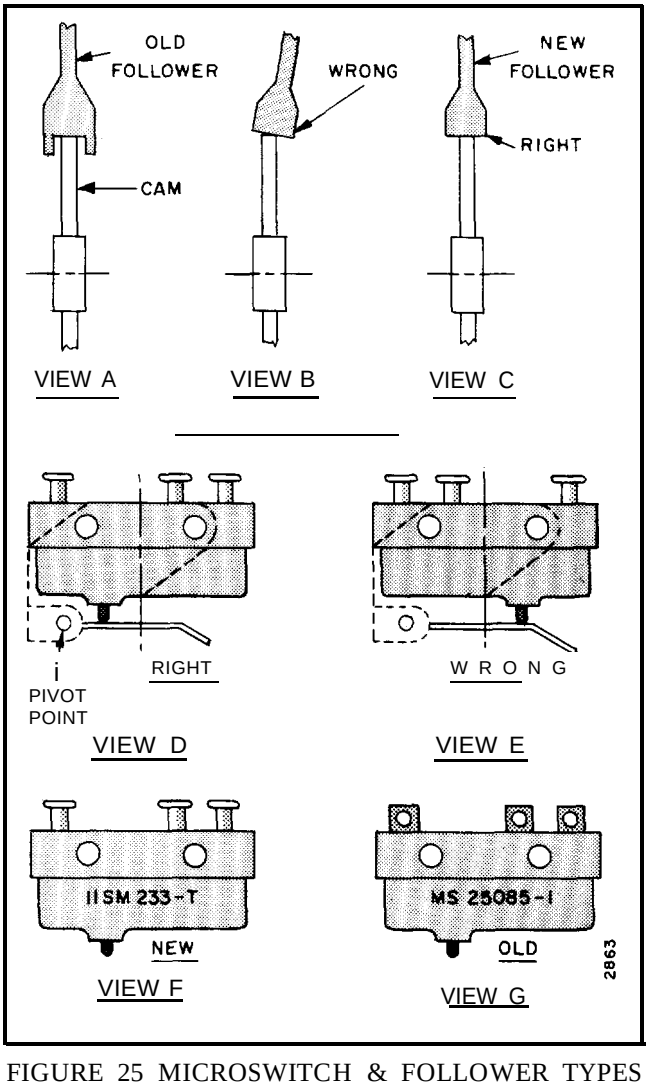

FIGURE 25 MICROSWITCH & FOLLOWER TYPES

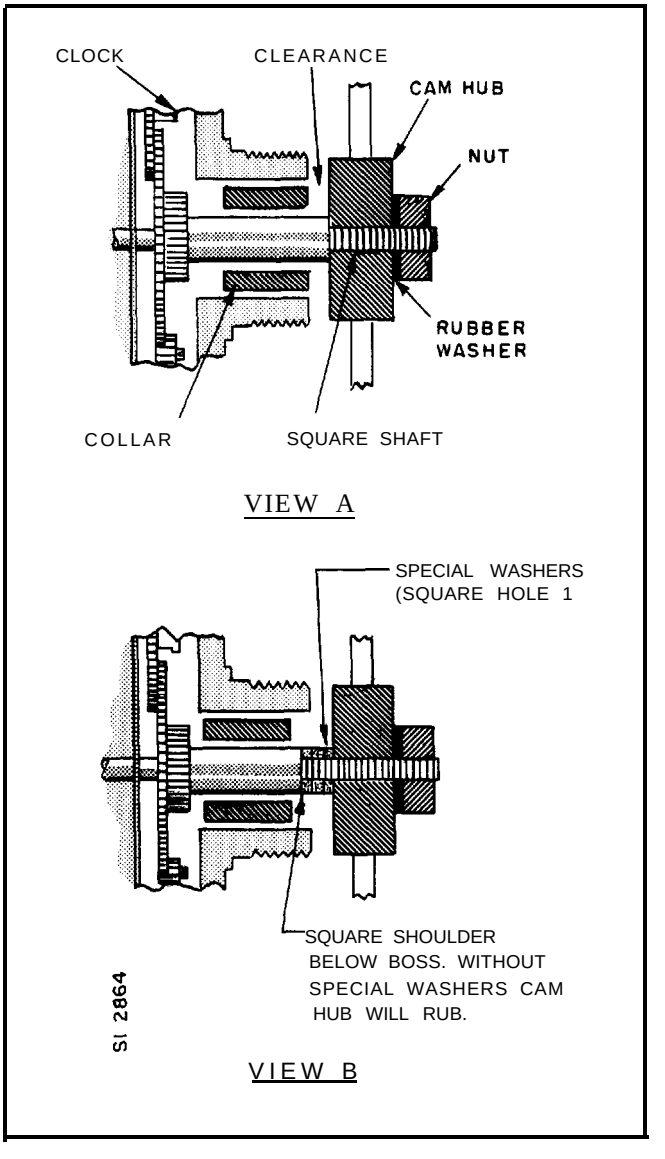

FIGURE 26 TIMER GEARING

1/32" clearance between the cam hub and the clock boss. The number of washers needed depends on the particular clock.

(9) The minute shaft used to drive the cam is small compared to the hole in timer it passes through. The hour hand has a hub which normally fills this gap. A special brass collar (View A, Figure 26), which does not touch the shaft, is installed to protect the shaft from over bending if the cam is inadvertently hit. This collar can fall out when the cam is removed. Be sure to have one in place before reinstalling the cam.

(10) Electrically the base of the mechanical clock goes positive (+) during the time that the clock is not winding. In order to eliminate the possibility of a direct short, the clock must be insulated from all ground potential. To accomplish this the mounting design incorporates the following.

a) A mylar sheet is held between the base of the clock and the mounting bracket.

b) An insulating sleeve and flange isolates the clock fastening boss from the hole in the bracket and the attaching nut. The cam is insulated from the follower in that it has a nylon hub.

(11) The clock has a shaft which passes through the case. The outside end of this shaft has a knurled head. This is used to set the timer when it is used as a clock. The other end of this shaft protrudes through the base on some timers and eventually wears a hole through the mylar sheet causing a direct short. The later model brackets have a hole so that this shaft cannot touch ground even if it does wear through the insulation. On the older models it is recommended that the end of this shaft be filed flush with the bottom of the clock case.

(12) Looking into the clock, from the side the wires emerge from, you will see a chrome plated main spring case and a cam mounted on the same main shaft that drives the cam. It looks like a chrome drum with a gear on its right side. The cam is a chrome plated piece mounted on the threaded section adjacent to the main spring housing. If the clock is stopped and this cam is jammed against the main spring housing the clock is overwound. A local jeweler can correct the situation. Once a clock has overwound it is recommended that a 22 ohm resistor be installed in series with this particular clock when it is reinstalled on the gage.

(13) The Ergas timer has a time adjusting screw on the back. A black arrow indicates the relative position of this screw. Moving the arrow towards (+) makes the clock run faster. One division, as marked, represents approximately 30 seconds in 24 hours.

Section J

MOTOR SWITCH (Camshaft)

(1) The setting of this switch could have been explained under Section C (Camshaft) as that is where its function is described. It was felt that its real purpose was not apparent until section H (Electrical) was fully described. This section is, therefore, dedicated to the setting of this switch.

(2) All over center switches of this type have hysteresis in their switching point. (They switch on at one point but switch off at a different point.) Refer to Figure 27, View A. This switch goes on at B, going up, but will not turn off until it reaches point C, going down. The distance between A and D represents the travel the actuating cam can move the switch. The over travel is represented by the distance AB and CD. These should be equal.

(3) If the over travel between A and B is too small, as shown by View B, the "switch on" position becomes marginal. Conversely, if the over travel CD is too small the "switch off" position becomes marginal.

(4) If the unit stops halfway through a cycle this switch is misadjusted. Conversely, if the recorder continues to punch out (refuses to stop) the switch is misadjusted.

(5) To adjust the switch properly proceed with the following steps.

a) Rotate cam until switch falls into valley. Schedule this function by allowing timer cam follower to fall off lobe. (On AC model discharge capacitors on power supply by shorting between terminals + and - on TB1. These are the top two terminals. If this is not done the camshaft will turn slightly on the next step making this adjustment impossible). Push switch down until it clicks twice. Care should be taken here, some switches click almost simultaneously. Distance between switch and cam should be approximately 1/32".

b) Advance camshaft until cam shuts off motor (this is done by reapplying power to the recorder and rotating timer cam until recock cycle is actuated). Re-energize the motor with the timer (rotate timer cam until follower falls off lobe) and note the switch follower moves downward approximately 1/32". If these conditions are not met, adjust switch.

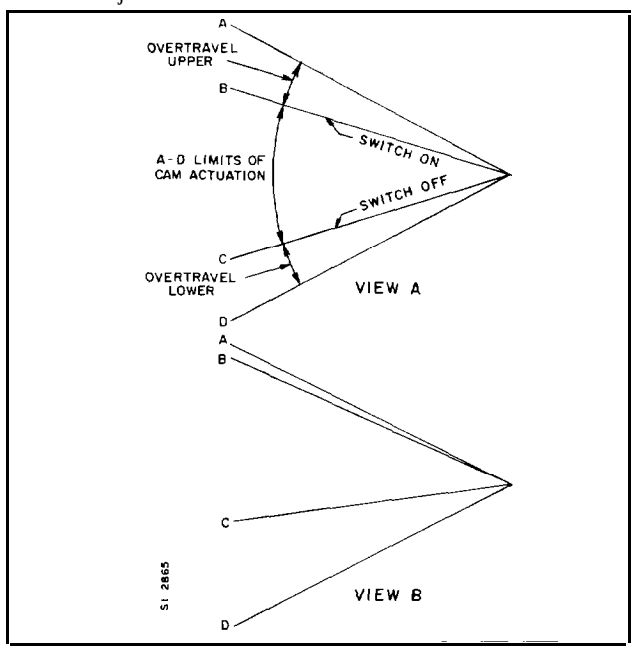

FIGURE 27 SWITCH ACTUATION GRAPH

Section K

MANUAL PUNCHOUT

(1) The gages are equipped with a manual pushbutton which allows the operator to initiate a manual punch out. The electrical switch shorts out the timer and camshaft switch as explained in the Electrical Section.

(2) If the timer switch is in the punch position (its position after punch out and prior to recock) and the manual button is pushed and held long enough to complete the recock cycle the recorder will complete the punch cycle even if the button is released.

(3) If the timer switch is in the recock position (its position after the recock cycle is completed and prior to punchout) and the button is pushed, the camshaft will turn only as long as the button is held in a depressed position. Releasing the button will cause the unit to stop. Since this is the punch cycle it is possible to allow the unit to stop while the punch arm is in and the punches are engaged. This could result in bent punches. A light was added to the panel as a protective device. This lamp lights when the unit is in the punch cycle. Never let go of the button during this time.

(4) The continued punching causes the light mounting nut to loosen in some cases. A good field fix is to remove the fiber washer between the nut and mounting plate and replace it with a rubber "O" ring. The size is not critical, any inside diameter between 5/8 and 3/4" will work. If. the red lens becomes loose carefully widen the tabs which hold it in place.

(5) It was desired that some indication be put on the tape when a manual punch out was initiated. Since the last decimal digit on the tape (10's column) is not used on the rain gage the binary 8 from that column is used for this indication. On level recorders this is the eighty column and the name eighty punch has stuck with this type of indicating.

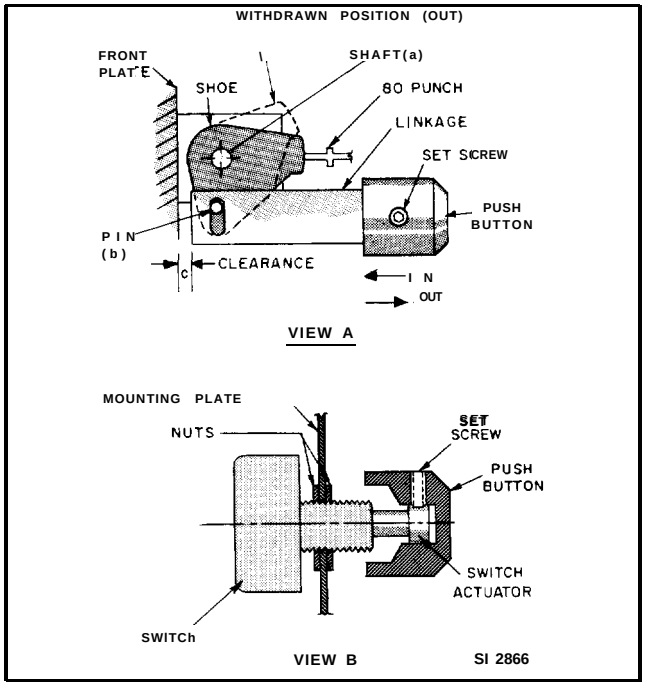

FIGURE 28 MANUAL PUNCHOUT ACTUATOR

(6) There is a mechanical link between the aluminum pushbutton which is affixed to the switch with a set screw and the lever which is moved in back of the 80 punch each time the button is pushed. The actuating linkage on the model 1548 was a rotating piece which moved in back of the 80 punch (see View A, Figure 28). The shoe pivots about shaft (a). It is actuated by pin (b) when the push button moves in or out. When the pushbutton is "IN", the shoe should be in the position shown in View A, in back of the 80 punch. When the pushbutton is in the "OUT" position the pin (b) rotates the shoe to the withdrawn position shown. Note: the shoe is not in back of the 80 punch.

(7) View B, Figure 28, shows the method by which the electrical switch is attached to the same pushbutton. The set screw fastens the button to the switch actuator. Pushing the button in makes electrical contact within the switch.

(8) There is a relationship between the mechanical link and the electrical contact that is necessary for proper operation. It is possible to have a misadjusted assembly wherein the linkage between the pushbutton and the shoe hits the front plate before the switch makes. Refer to View A. The clearance "C" is used up but the switch shown in View B has not made. It is obvious that the switch must move outward relative to the pushbutton. If this cannot be accomplished by loosening the set screw and allowing the switch actuator to go deeper into the button, the switch must be moved out. This can be accomplished by readjusting the mounting nuts located on both sides of the mounting plate.

(9) If the manual read button sticks in the pushed position on the 1548 gage (small door) the problem is caused by binding of the shoe on the shaft (a) (Figure 28, View A). A drop of oil will usually correct this condition.

(10) It is possible to bend a punch by actuating the pushbutton when the punches are in on the 1548 gage. Refer to Figure 28, View A. Assume the shoe is in the withdrawn position shown by the dotted lines. The punch is in, and the button is then pushed calling for a readout, the light is on and the button is accidentally snapped out. The normal reflex is to push it in quickly. This bends punches.

(11) In order to eliminate the possible punch bending problem presented in paragraph 10 above the shoe of the 1548 gage was replaced with an over center linkage arrangement on the 1558 and 1559 (large door) gages. This 80 punch back up shoe moves in opposition to the 80 punch rather than turning down into it. If the same inadvertent releasing of the button described in 10 above happens this shoe pushes the 80 punch back out without bending it. All the adjustments described for the 1548 gage also apply to the 1558 and 1559 gages in this area.

(12) If the manual read button sticks in the "IN" position on the 1558 or 1559 (large door) gages the problem is in the switch. Replace it.

(13) The Design Sequence A2 instruments have no linkage between the manual read button and the 80 punch. A stationary block is mounted behind the 80 punch causing it to punch a hole in the 80 column every time the instrument operates thru its punch cycle.

Section L

TROUBLE SHOOTING CHART

TROUBLE	PROBABLE CAUSE	READ SECTION & PARAGRAPH
Gage Insensitive	Bent flexures Hook interference Dash Pot interference Gear interference Drag of locking lever	Section A Paragraph 1 Section A Paragraph 5 Section A Paragraph 7 Section B Paragraph 4 Section E Paragraph 3
Excessive Oscillation of Gage	Check dash pot oil level	Section A Paragraph 8
Gage will not reach maximum limits	Improper index of pulley to code disc	Section B Paragraph 5
	Check shipping and limit screw	Section A Paragraph 9
Broken Cable	Install new cable (Important - read instructions before replacing)	Section B Paragraph 2 & 3
Gage will not start	Check battery voltage. Should be at least 6 volts when gage is in punch cycle Check if wires to battery are reversed Timer switch misadjusted	 Section B Paragraph 4b Section H Paragraph 1, 2, & 3 Section I Paragraph 2
Diode CR1 failed	Check short in time (For purpose of Diode CRl)	Section I Paragraph 11 Section H Paragraph 4b
Dead Battery	Check diode in clock	Section H Paragraph 5
Motor runs but camshaft does not turn	Gear train stripped caused by - a) Nick in cam causes follower to to bind b) Misadjusted force spring Replace motor after correcting above	 Section G Paragraph 13 Section G Paragraph 14
Gage will not stop (Punches out continuously)	Camshaft switch misadjusted	Section H Paragraph 1, 2 & 3 Section J Paragraph 5
Gage stops in mid-cycle	Check camshaft switch	Section C Paragraph 4 Section J Paragraph 1 - 5
Punched holes are between lines	Adjust feed paw1	Section F Paragraph 12 - 14
Pointer to code disc does not reflect punched value	Check zero position	Section D Paragraph 10
Punching incorrect values	Die block misaligned	Section C Paragraph 10
Camshaft switch broken	Leads to battery reversed and failed CR1 diode	Section H Paragraph 4b
Timer stops	Check overwinding	Section I Paragraph 12

TROUBLE	PROBABLE CAUSE	READ SECTION & PARAGRAPH
Timer slow or stopped	Sprocket backing up	Section F Paragraph 7 & 8
	Check followers fingers	Section F Paragraph 3
	Check cam overloading and follower setting	Section I Paragraph 2
	Check cam surface	Section I Paragraph 4
	Check follower adjustment	Section I Paragraph 5
	Check switch mounting	Section I Paragraph 6
	Check type switch	Section I Paragraph 7
	Check clearance between cam and clock	Section I Paragraph 8
Pin falls out of take-up spool	Pin no longer used	Section F Paragraph 5
Tape stuck in die block	Check for bent punch or punh out from under stripper plate	Section G Paragraph 6 - 9
	Punch arm cam follower misadjusted	Section G Paragraph 12
Tape stuck in die block	Telemetering contacts misadjusted	Section G Paragraph 17
Bent Punches	Cause	Section C Paragraph 4 Section G Paragraph 6 Section K Paragraph 3, 9 & 10
	Repair	Section G Paragraph 7
	Replacement	Section G Paragraph 8
Tape will not come off take-up spool	Problem is in spool	Section F Paragraph 5
Tape mispunching (lacing or close punches)	Misaligned punch block shim	Section G Paragraph 11
	Improper paper take-up tension or bad coupling	Section F Paragraph 2
	Misaligned take-up spool	Section F Paragraph 4 & 6
	Binding of supply spool section	Section F Paragraph 8
Close punches every 40 spaces	Bad sprocket teeth	Section K Paragraph 9
Close punches	Bad sprocket	Section K Paragraph 9
Holes not through	Punch pressure	Section G Paragraph 14
Tape comes off sprocket causes mispunching	Check supply bracket spring and sprocket	Section F Paragraph 10, 11
Tape supply bracket comes apart	For field fix please read	Section F Paragraph 12
Manual readout button sticks in	80 punch linkage stuck on 1548 (small door)	Section K Paragraph 9
	Switch stuck on 1558 and 1559. Replace it	Section K Paragraph 12
Red lamp falls apart	Reassemble using “O” ring	Section K Paragraph 4
Manual read button will not actuate read out when depressed	Check relationship of push button to switch	Section K Paragraph 7

Section M

ADJUSTMENTS

Type of adjustment, related page, and paragraphs.

ADJUSTMENT	SECTION & PARAGRAPH	PAGE
Zero	Section A Paragraph 2 & 6	1
Range	Section A Paragraph 3, 5, & 6	1
Dash Pot Piston	Section A Paragraph 7	2
Shipping Screw	Section A Paragraph 9	2
Top Limit Stop	Section A Paragraph 9	2
Camshaft	Section C Paragraph 3	4
Motor Switch Cam	Section C Paragraph 4	4
Code Disc Pointer	Section D Paragraph 10	6 & 7
Locking Lever	Section E Paragraph 3	8
Feed Paw1	Section F Paragraph 12, 13 & 14	10
Punch Arm Follower	Section G Paragraph 12	13
Punch Pressure	Section G Paragraph 14	13
Timer Switch	Section I Paragraph 2	18
Timer Setting	Section I Paragraph 13	20
Motor Switch (Camshaft)	Section I Paragraph 5	20

O.K. but disregard drawings - See Hydro Mod. #4

INSTRUCTION BULLETIN

for

SERIES 35B1558 AND 35B1559

PRECIPITATION GAGE - RECORDER

Design level "A" and "B"

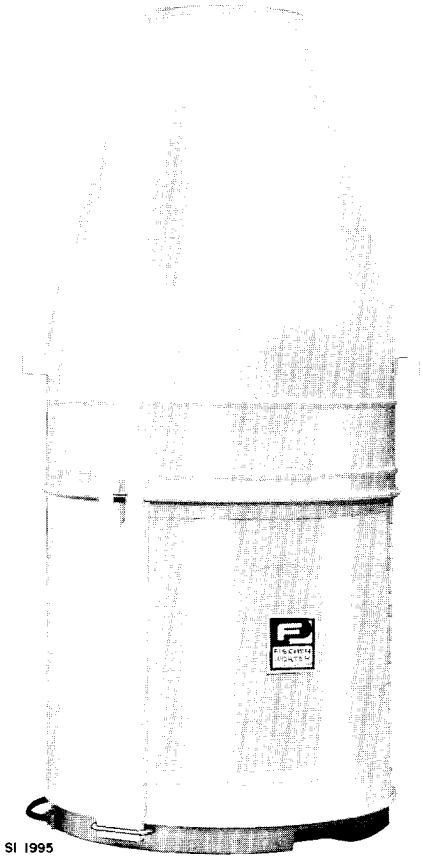

FISCHER & PORTER CO

WARMINSTER, PENNSYLVANIA, U.S.A.

TABLE OF CONTENTS

INTRODUCTION

I Model Numbering System 3

II General Description 3

III Specifications 4

INSTALLATION-OPERATIONS

I Location 4

II Unpacking 4

III Preparation for Service 6

A. Series 1559; DC Service 6

B. Series 1558; AC Service 7

C. Filling the Dashpot 7

D. Installation of Data Recording Tape 7

E. Test Readout. 8

F. Alignment 8

G. Time Synchronization 9

IV Placing On Station 10

V Maintenance 10

A. General 10

B. Removing the Recorded Tape . . . 10

C. Emptying the Collector 13

D. Changing the Time Cycle 13

E. AC/DC Interchangeability 13

PRINCIPLES OF OPERATION

I General 13

II Enclosure. 14

III Measuring Element 14

IV Input Gearing and the Code System . 15

A. Input Shaft and Gearing 15

B. Code Disk 15

V Programming System 16

A. Timer Unit 16

B. Drive Motor and Switch 16

C. Code Disk Lock-Out 18

D. Non-Ambiguity 18

E. Punch Out 20

F. Recording Tape Drive 21

VI Punching and Reset Mechanism 21

VII Code and Tape Design 21

VIII Telemetering Facilities. 22

SERVICING AND ALIGNMENT

1. Pulley Cable. 22

2. Main Spring 22

3. Locking Lever 22

4. Programming Cam Shaft . . . 23

5. Paper Tape Advancement Lever 23

6. Motor Switch Cam. 23

7. Punch Block Assembly 23

8. Punch Stripper Plate 23

9. Punch Arm Rider. 23

10. Punching Pressure 23

11. Dashpot Alignment 23

The instructions given herein cover generally the description, installation, operation and maintenance of subject equipment. F&P reserves the right to make engineering refinements that may not be reflected in this Bulletin. Should any questions arise which may not be answered specifically by these instructions they should be directed to the Fischer & Porter Co. for further detailed information and technical assistance.

COPYRIGHT JANUARY 1971 FISCHER & PORTER CO.

INTRODUCTION

I Model Numbering System

Refer to the Fischer and Porter Manufacturing Specification Sheet or the instrument data tag for the specific model number of the instrument furnished. The details of a specific model number are shown below.

35 B 15 58 E A 1 2 A C 2

Catalog Prefix

Design Level

Analog to Digital Punched Tape Recorder

Application

58 = AC Precipitation Gage Service (120 vac 60 Hz)
59 = DC Precipitation Gage Service (7.5 vdc.)

Count Ratio

E = 0.1 Inch per Count
N = 1.0 Millimeter per Count

Transmission Facilities

A = No Transmission Facilities
D = Binary Decimal Transmission

Recording Method

1 = Punched Tape

Timer

1 = 15 Minute Timer
2 = 30 Minute Timer
3 = 60 Minute Timer
4 = 5 Minute Timer
6 = 6 Minute Timer

Clock Mechanism

A = Mechanical (ERGAS)
B = Electronic [Solid State)
C = AC Synchronous

Accessories

C = Rain Trace Detector
X = Not Required

Bucket Configuration

1 = Standard Bucket
2 = Self-Syphon Bucket

II General Description

The Fischer and Porter Precipitation Gage-Recorder, shown on the cover, mechanically converts the depth of accumulated atmospheric precipitation (rain and/or snow) during a given period of time, to a code disk position. This code disk position is recorded on punched paper tape at selected intervals. The instrument is designed for a permanent installation in remote areas and is powered by either an internal 7.5 volt dry battery or 117 vac service.

The measuring device consists of a collection bucket (collector) for receiving and storing the precipitation, a weighing device for measurement, and an indicating dial to display, in inches, the amount of precipitation gathered by the collector.

The recording mechanism operates in conjunction with the measuring device to record at predetermined intervals, the total amount of precipitation accumulated in the collector to the nearest 0.1 inch. It is designed to operate with a minimum of care and by persons with little technical training. Recording is in a standard binary-decimal code on paper tape that is suitable for automatic machine processing methods following translation by means of a Fischer and Porter Automatic Translator. The Recorder is powered by self-contained batteries or by an ac voltage supply and may be left "on station" unattended for long periods of time. Provisions for a manually initiated readout are included. The Recorder is programmed to read out

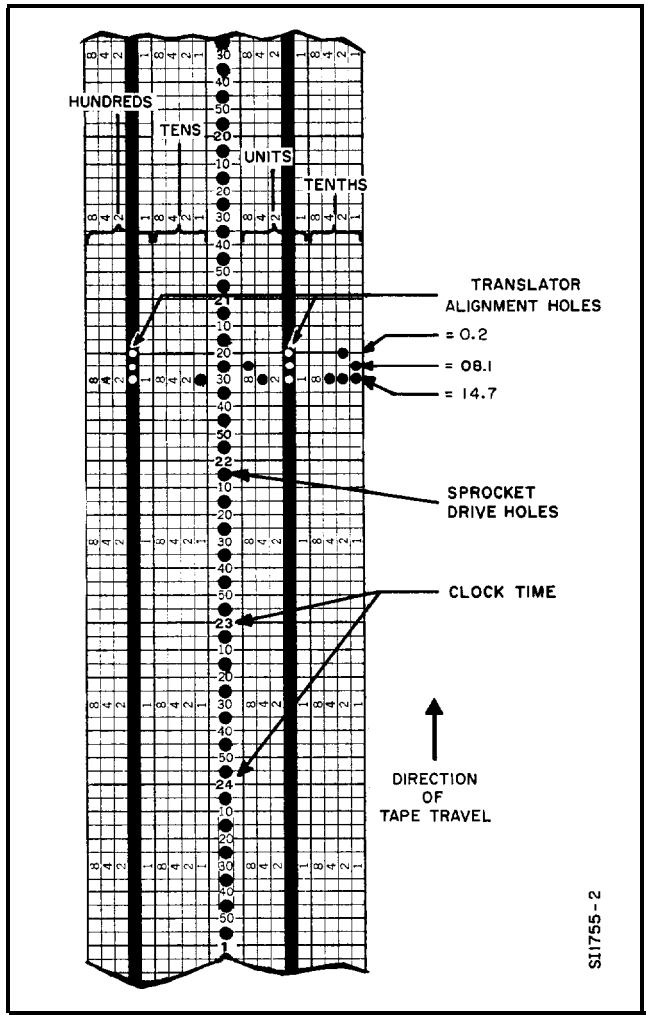

FIGURE 1 FACSIMILE OF DATA RECORDING TAPE

INTRODUCTION (Continued)

the weighed level of precipitation at predetermined intervals, by a timer mechanism. Changes to other timing intervals can be made in the field by substituting different timing cams or by repositioning the selector switch (on the solid state timer models).

The punch tape is fabricated from a paper stock that is unaffected by temperature and humidity conditions for extended periods of time. The paper tape design, as shown in Figure 1, is such that visual reading- can be made with a minimum of effort. Each horizontal row of punched holes represents the total amount of accumulated precipitation in digital form at the time of punching. Each row is divided into sections representing the tenths, units and tens digit of the number. Each section is binary coded l-2-4-8 and mental summation of the punched holes will establish the digital reading.

By using auxiliary equipment, electrical contacts may be utilized to generate a telemetry output. This telemetering capability permits remote interrogation of the Recorder by radio or telephone facilities. A Fischer and Porter Binary-Decimal Transmitter serves this function. The instrument is also provided with a direct reading dial.

III Specifications

Electrical Requirements . . .	7.5 vdc dry cell (Eveready No. 1562); or 117 vac ± l0%, 60 Hz.
Power Drain	2 watts max.; 0.05 watts average for 5 minute readouts.
Measuring Characteristics	
Range	0 to 19.5” precipitation
Accuracy	± 0.15” of range span
2” to 4” change . . .	± 2.5% of net change
less than 2” change . . .	± 0.05”
Sensitivity	0.025” reponse
Recording Characteristics	
Range	0 to 19.5” precipitation
Code	Binary-Decimal
Accuracy	± 0.1” (± 0.05” of measured variable)
Dial Graduations	0.05”
Data Tape	410’ ± 5’ per roll. Typically, 5 minute readout tape lasts 5 months
Readout Time	15 seconds average
Time Cycle Readouts	5, 6, 15, 30 or 60 minute intervals, as specified
Timer Accuracy	± 2 minutes per day
Ambient Temperature . . .	-4° to +122°F
Relative Humidity . . .	15 to 95%
Physical Characteristics	
Dimensions	20” diameter x 42” high
Net Weight	78 pounds
Collector Capacity	25 inches liquid

INSTALLATION-OPERATION

I Location

The Precipitation Gage-Recorder may be mounted in any suitable location. Abrupt changes in temperature and humidity as well as vibration will not impair the operation of the instrument.

II Unpacking

All possible precautions have been taken in packing the Precipitation Gage-Recorder to prevent damage to the instrument during shipment. The instrument is shipped in a specially constructed carton,

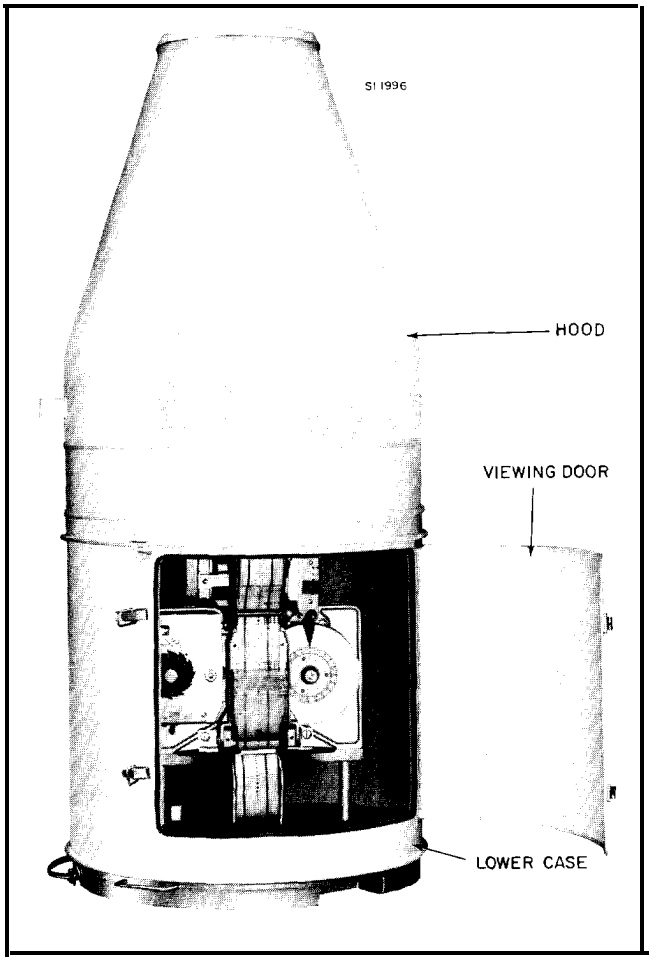

FIGURE 2 PRECIPITATION GAGE-RECORDER, DOOR OPEN

designed for maximum protection in transit. It is recommended that the carton and cushion packing material be saved so that reshipment to another site can be made with equal protection. Before unpacking the Recorder, make sure that the container is right side up. Refer to Figures 2, 3 and 4, as an aid to the following discussion.

1) Open the top flaps of the container; note that the interior is divided into two sections. Remove the top cushion inserts from both sections.

2) Remove the plastic tube of dashpot oil and the spare parts kit that is taped to the insert of the container.

3) Lift out the hood. From the underside of the hood, reach in and remove the funnel protector insert.

Note that the funnel is pin and notch latched to the interior of the hood and serves to direct the rainfall from the hood opening to the collector thru a small diameter opening. This minimizes losses from evaporation and disturbances due to wind turbulence. It is advisable that during the snow season this funnel be removed in order to prevent snow build-up and freezing within the hood-funnel and the consequent clogging of the funnel outlet.

4) Lift out the collector and remove the cushion protector from the collector hub. Remove the wrapped force post from between the collector cardboard flaps.

5) Lift out the separator and the cushion from the top of the second section.

6) Remove the case assembly by grasping underneath the hand holes on the base of the instrument and lifting it straight up from its nest.

7) Remove the latch cover (taped to the case) ; rotate the lower case counterclockwise to release it from its latches; carefully lift the case up from the instrument.

8) Place the instrument on a bench for ease in service preparation. Remove all shipping lashings. The unit should be inspected immediately for indications of damage that may have occurred during shipment. All damage claims should be made to the shipping agent, before attempting to install or operate this equipment. Any instructions, given on tags attached to the instrument, should be followed carefully. In particular, note the tag attached to the shipping screw protruding from the base casting of the scale support assembly. Loosen this screw, turning out until the starting end is flush (or below) the casting surface.

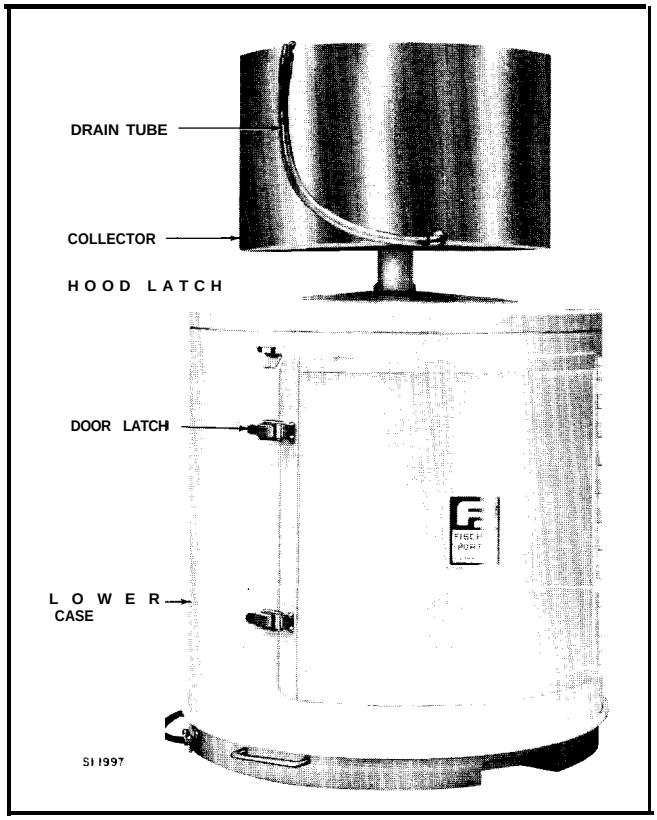

FIGURE 3 PRECIPITATION GAGE-RECORDER, HOOD REMOVED

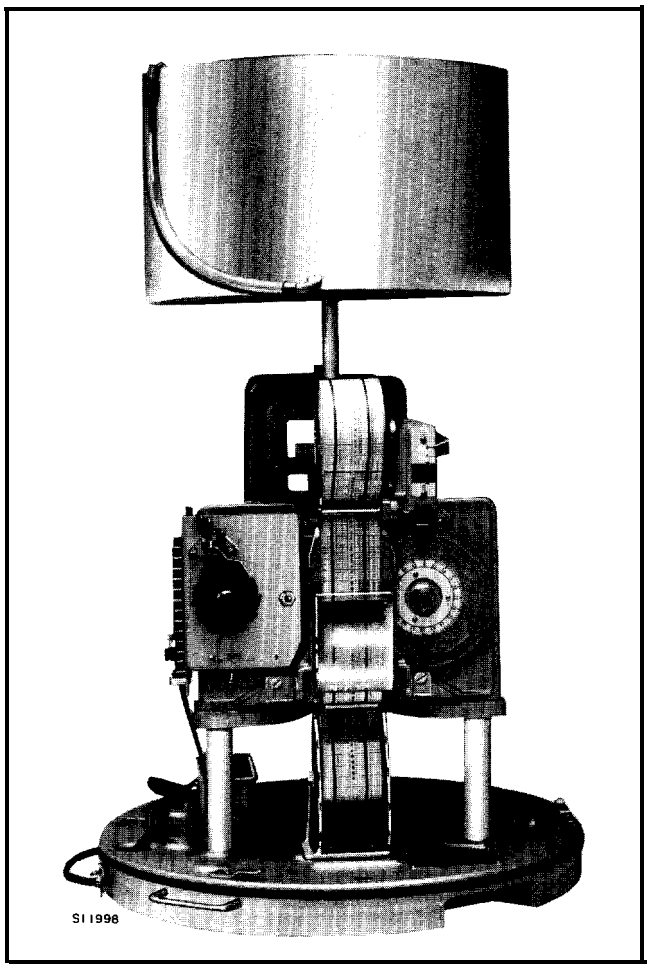

FIGURE 4 PRECIPITATION GAGE-RECORDER, PREPARATION FOR SERVICE

Retain this bolt for future reshipment by tightening the lock nut securely.

9) The weighing portion of the instrument is shipped in a locked position. Rotate the zero adjust knob (located on the top of the weighing scale assembly) counterclockwise, until the code disk just starts to move freely from the locked position.

10) Insert the force post (shipped inside the collector package) into the weighing scale, just forward of the zero adjust knob. Unwrap the collector and carefully place it on the force post.

11) In case of reshipment to another location, secure the weighing scale by rotating the zero adjust knob (located on the top of the weighing scale assembly) clockwise until the top (tapped end) of the "upper main spring hook" is flush with the top of the knob.

Turn the shipping screw (finger tight only) until it rests against the "support arm casting". Then, lock in position using the lock nut. Pack the instrument in its original container using all of the cushion material, following the reverse procedure as outlined above.

III Preparation for Service

Refer to Figures 4 thru 7 as an aid to the following discussion.

A. Series 1559; DC Service

Install a customer supplied 7.5 volt dry battery on the three raised bosses of the base plate. Connect the two wires, that are hanging loose from the timer assembly to the battery, observing the marked polarity.

CAUTION

Make sure that the red lead is connected to the battery plus (+) terminal.

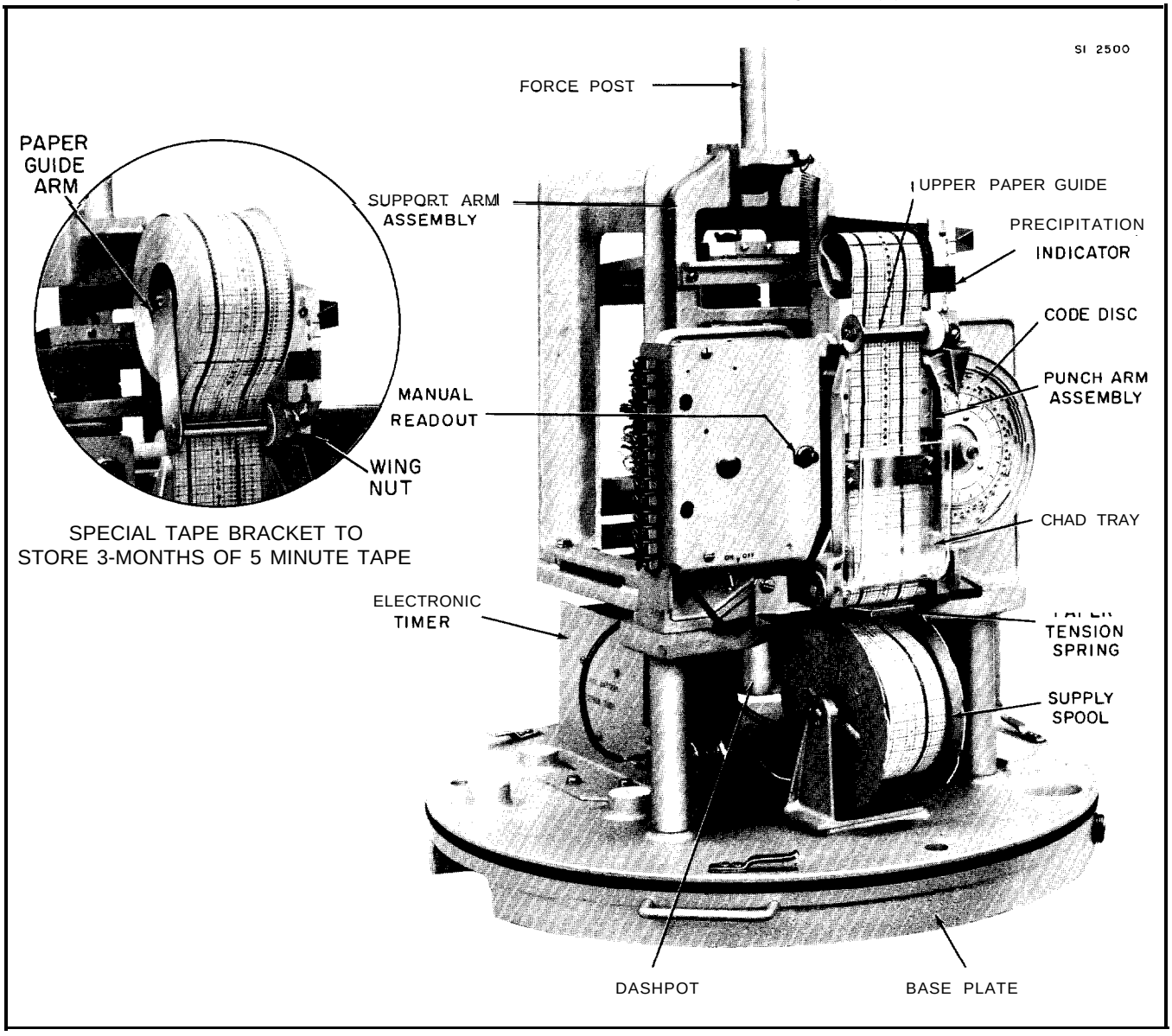

FIGURE 5 PRECIPITATION GAGE-RECORDER, FRONT VIEW

B. Series 1558; AC Service

Customer supplied ac line power is applied to the instrument by way of the conduit entrance facility on the base plate. Follow the Underwriter Laboratory and local electric service codes in wiring power to the instrument. For ease in maintenance, it is suggested that connections to the Gage be made either via a 3-pin grounding type ac cord and plug, or via a service type switch box.

Make sure that the POWER switch on the Timer Bracket is in the OFF position.

Open the condulet junction box located on the base plate; wire to the duplex receptacle therein:

Using 2-conductor cable with a ground: -

Connect the ø leg to the yellow metal terminal.

Connect the N leg to the white metal terminal.

Connect the ground wire to the green grounding lug on the receptacle.

WARNING

Adjacent components and circuits carry voltages that may be dangerous to life. Observe all safety precautions.

REMOVE the ac plug from the receptacle before performing maintenance or service procedures.

DO NOT REMOVE the fuse with the POWER switch in the ON position.

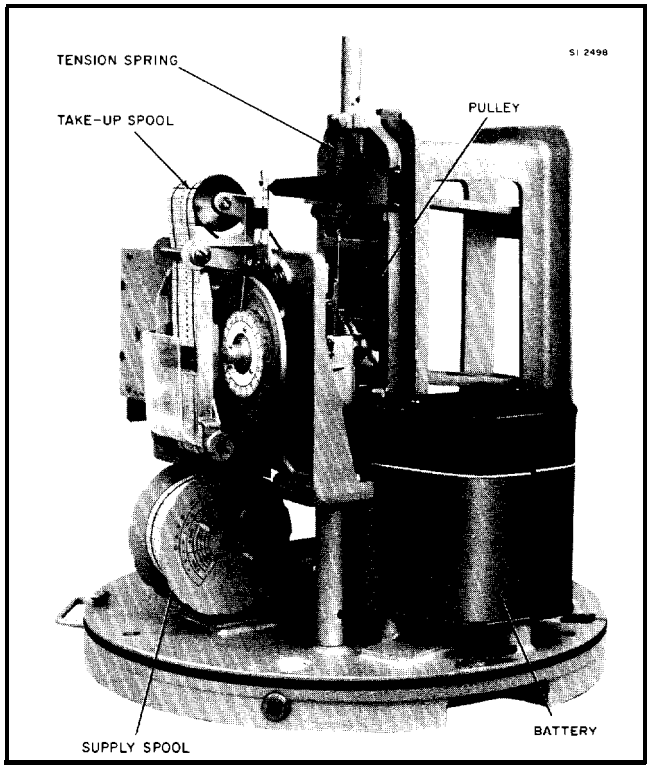

FIGURE 6 PRECIPITATION GAGE-RECORDER, BATTERY SIDE VIEW

C. Filling the Dashpot

The dashpot cylinder is not filled with oil at the factory and must be filled before placing the instrument in operation. A container of special oil is furnished with the instrument for this purpose. Make certain that there is no excess weight on the force post; that is, only the empty collector. Remove the cap and insert the nozzle of the plastic oil container into the counter-sunk well of the dashpot shaft. Squeeze the tube until the entire contents have been emptied into the dashpot; the container holds just enough oil to fill to the proper level. If the dashpot shaft well seems full and oil remains in the container, wait a few minutes for the oil to settle in the dashpot, then continue to fill. It may help to slowly move the weighing mechanism up and down, allowing the oil to settle in the dashpot.

D. Installation of Data Recording Tape

1) Make certain that the power is shut off. Power may be removed by placing the POWER switch (located on the Timer Bracket) in the OFF position.

2) Remove the plastic chad tray from the punch arm assembly by lifting and tilting the top edge outward.

3) Remove the right side tape supply spool disk by rotating it counterclockwise.

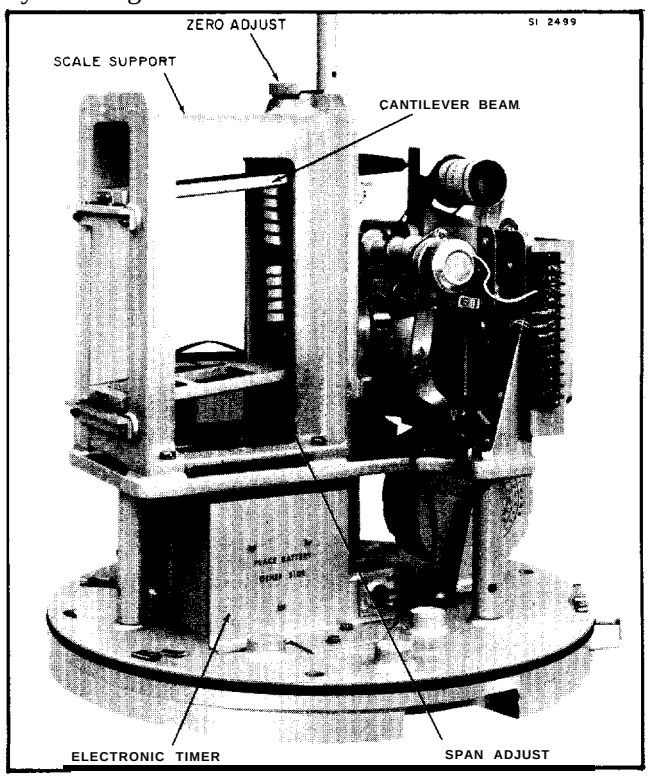

FIGURE 7 PRECIPITATION GAGE-RECORDER, TIMER SIDE VIEW

4) Place a full tape roll on the tape supply spool, positioned so that the printed information is right side up when facing the front of the instrument.

5) Replace the right hand side tape assembly spool disk.

6) Pull the end of the tape off the supply roll, leading it behind the paper tension spring and under the base of the punch arm assembly between the tape drive sprocket and paper tension spring and toward the front of the instrument.

7) Withdraw about 20 inches of paper tape beyond the tape drive sprocket at the base of the punch arm assembly.

8) Feed the end of the paper tape between the punch holder and punch die; then take up the slack and seat the tape drive sprocket holes over the drive sprocket pins.

If the instrument has been furnished with a standard tape bracket assembly (illustrated in Figure 5), capable of storing 3 months supply of 15-minute (or greater time increment) recorded tape or 1 month's supply of 5-minute tape -

a) Pull the tape up behind the upper paper guide, to the take-up spool.

b) Fold the end of the tape over and then slip the end of the tape into the lateral slit in the periphery of this spool, inserting the tape down into the center portion of the spool. Make certain that the paper tape is square with the spool.

c) Take up the slack in the tape by rotating the take-up spool.

d) Take up any final slack by pulling gently on the spring drive belt.

If the instrument has been furnished with a special tape bracket assembly (Figure 5 insert) capable of storing 3 months of 5-minute recorded tape -

a) Pull the tape up behind the upper paper guide to the take up spool.

b) Fold the end of the tape over and slip the end of the tape into the lateral slit in the periphery of this spool, inserting the tape down into the center portion of the spool. Make certain that the paper tape is square with the spool.

c) Take up the slack in the tape by rotating the take-up spool in a forward position.

d) Take up any final slack by pulling gently on the spring drive belt.

E. Test Readout

After placing the POWER switch to the ON position, manually initiated punch out may be made by actuating the MANUAL READOUT push-button switch. This switch applies power to the punch motor. If a dc Timer is incorporated, depress and hold the switch until the punch out is complete. If an electronic timer is being used, depress and hold the switch for 5 seconds.

Use of this switch should be limited to test and alignment purposes as each "off schedule" punch out will de-synchronize the preprinted time increments of the data recording tape with actual time of day and will necessitate re-synchronization.

F. Alignment

The Precipitation Gage-Recorder is aligned and calibrated at the factory and, with the exception of adjusting the zero and span, is ready for service. Carefully place the empty collector on the force post (with the hood and lower case removed).

1. Adjusting the zero end of the scale

Rotate the zero adjust knob located on top of the scale support until the code disk pointer is at the exact 0 position. Depress the MANUAL READOUT pushbutton to initiate a punch out operation. Look at the punched value on the tape,

a) If the tape does not read zero (no holes punched), rotate the zero adjust knob in a compensating direction; clockwise rotation lessens the count. Repeat the manual punched readout until zero is obtained on the tape.

b) When the tape does read zero, initiate another manual readout and remove the power (during the cycle) to lock the code disk in a punching cycle. This may be accomplished by placing the POWER switch in the OFF position.

c) Make sure that the code disk pointer is in the exact 0 (zero) position. If not, loosen the pointer mounting screw and reposition the pointer accurately.

d) Re-apply power, permitting the Recorder to complete the punch out cycle.

e) When the code disk is free (unlocked) the pointer and the 0 (zero) index on the dial should be aligned; if not, reposition the pointer.

f) Note that the vertical scale precipitation indicator is at 0 (zero). If not, loosen the scale mounting screws and reposition the scale so that the pointer is in the exact 0 (zero) position. Tighten the scale screws.

2. Adjust the span end of the scale

Place a 27.186 pound calibration weight (equivalent to 15 inches precipitation) in the collector. Note that the code disk makes l-1/2 revolutions and its pointer is at the 5.0 position and that the vertical indicator is at the 15 position. If these checks are not met -

a) Rotate the span adjust screw, located under the lower cantilever beam where the main spring terminates, until the code disk pointer is at the exact 5.0 position (after making l-1/2 revolutions) and the vertical indicator is at the 15 position. Clockwise rotation of the span adjust screw will increase the code disk travel.

b) After adjusting the span, remove the calibration weight and recheck the zero. It may be necessary to re-adjust the zero adjust knob.

G. Time Synchronization

The Precipitation Gage-Recorder records data based on time. It is necessary to synchronize the recording tape, and the timer mechanism with the actual time of day.

1. Mechanical Timer

a) Re-apply power to the instrument.

b) The Timer Unit can be set by rotating the protruding cam disk in a clockwise direction. The 15 minute interval timer has a four-step cam, the hourly timer a single-step cam, the 5 minute timer has a twelve-step cam and the 6 minute timer has a ten-step cam.

CAUTION

Do not rotate the cam in a reverse direction.

c) Rotate the timer cam to the punch out position and permit the cam follower to drop off the cam and initiate punch out. Wait for the motor to stop thereby allowing the programming shaft to complete its revolution.

d) Remove power from the instrument.

e) Refer to Figure 1, a facsimile of the 5 minute recording tape, and note that the center column designating the time of day is based on a 24 hour clock. Horizontal line graduations, between each of the hour digits, represent the appropriate time increments.

To synchronize the instrument with the time of day, proceed as follows:

f) Position the data recording tape so that the horizontal line on the tape, corresponding to the next increment of the actual time of day, is in the punching position as viewed through the punch holes, or that the horizontal line on the tape corresponding to the previous increment of time is just barely visible at the upper surface of the punch die.

g) Mechanically align the cam follower with the actual time of day to the minute, within the cam increment. Assuming that a 5-minute cycle timer is being used and that actual time of day is 3:23 P.M., or 3 minutes past the start of a time increment, the cam follower-switch actuator will be placed at the 3rd division mark past the "20" cam drop-off point. In this manner the punch out will be initiated after a 2 minute delay, to correspond with the 15: 25 desired punchout.

h) Apply power to the instrument; synchronization is complete.

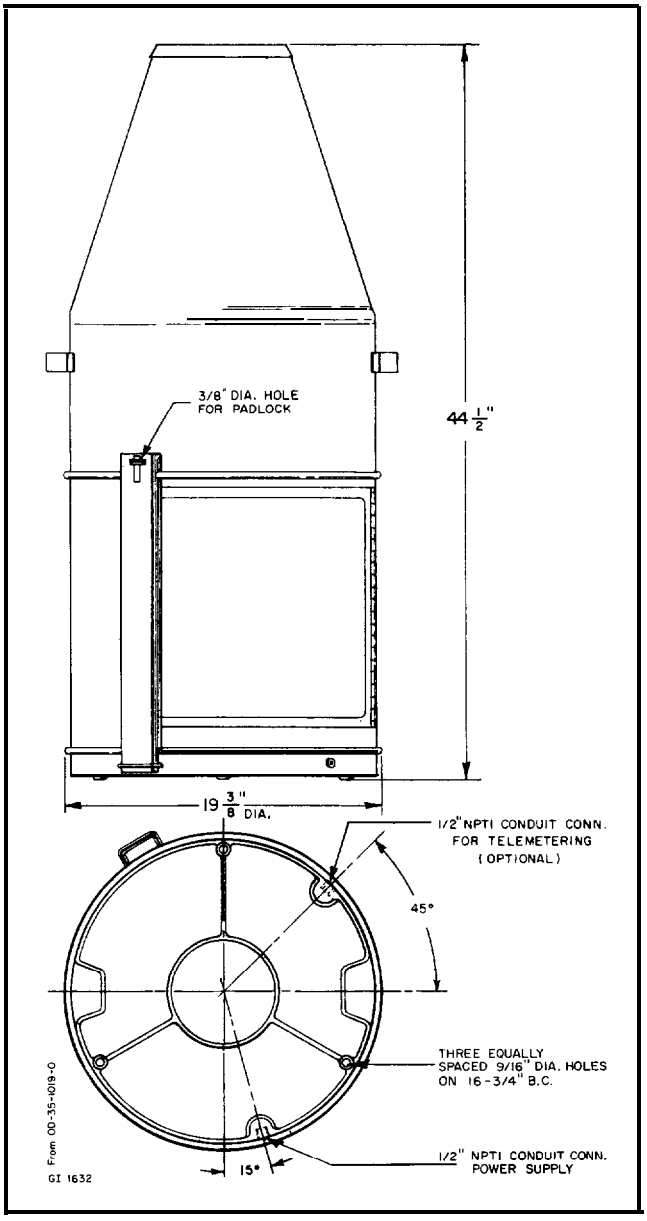

FIGURE 8 OUTLINE & MOUNTING DIMENSIONS

2. Electronic Timer

Place the toggle switch (located on timer face) in the "test" position. Align the tape with the die block to the next desired punch-out period. Two seconds prior to the desired actual punch out time, place the toggle switch in the "Operate" position. Punchout will occur 2 seconds later and the timer will cause punch-out to occur at the pre-selected timer interval.

IV Placing on Station

For best results, a concrete base should be constructed and the Precipitation Gage-Recorder bolted to it. Refer to Figure 8, Outline and Mounting Dimensions for details.

For the correct measurement of precipitation the open end of the gage (the receiver) must be level. This can be checked by laying a carpenter's level across the open top of the gage in two directions; one crossing the other at right angles. This is important; a gage that is not level will produce erroneous readings.

If the Precipitation Gage-Recorder has been provided with telemetering facilities, connect the necessary wiring from the 17-point terminal board to the Telemeter Transmitter. Refer to Figures 9 and 10, the Wiring Diagrams and to the Telemeter Transmitter Instruction Bulletin for additional details. It will be necessary to remove the pipe plug from the base of the Recorder and replace it with a conduit fitting.

When using a Series 1559 dc unit, make certain that the battery is in place and connected properly.

When using a Series 1558 ac unit, make certain that the ac power is applied to the junction condulet.

1) Place the lower case assembly down over the instrument, positioned so that the open door exposes the Recorder; making sure that it seats firmly. Rotate the case clockwise about 2 inches until it locks in position.

2) Place the collector on the force post.

CAUTION

Use care in removing and installing the collector so as not to cause undue stress on the weighing mechanism.

3) Place the hood down over the collector until it seats firmly. Rotate the hood clockwise about 2 inches until it locks in position, with the locking latch in line with the hood latch.

4) Open the front door. Make certain that the POWER switch is in the ON position and that the timer and tape have been synchronized with the actual time of day. If necessary, re-adjust the "zero" of the instrument. Close and latch the door.

5) Insert the latch cover in its retainer (on the base) putting it in proper position flush to the case, in line with the hood latch. Padlock the instrument.

V Maintenance

A. General

Normal care exercised in the handling and operation of this equipment will go far toward providing trouble-free service. Servicing will, for the most part, be devoted to replacement of the battery, replacement of the recording tape, time synchronization, and draining of a full collector.

Should problems arise which cannot be solved by normal trouble-shooting procedures, complete information as to the nature of the difficulty should be referred to the manufacturer's service department. Instructions covering corrective measures and parts replacement, if component failure is indicated, will be furnished promptly.

CAUTION

Before performing any service or maintenance procedures remove the ac source by removing the ac plug from the condulet receptacle on the base of the instrument.

B. Removing the Recorded Tape

At the completion of a recording period (daily, weekly, monthly, etc.) when it is necessary to remove a recorded portion of the recording tape; use the following procedure:

1) Unlatch and open the instrument door. Make sure punchout is not eminent, and that there is sufficient time to change the tape.

2) Remove the plastic chad tray.

3) Mark the date, time of removal, and any other pertinent information on the recording tape.

4) From the underside of the instrument below the tape sprocket drive, draw approximately 20" of slack tape from the supply spool, releasing the tape from the drive sprocket pins, or hand rotate the sprocket until the last punched reading has been wound on the take-up spool.

5) From the top of the punch arm assembly pull the data recording tape past the punching position, so as to take up most of the slack.

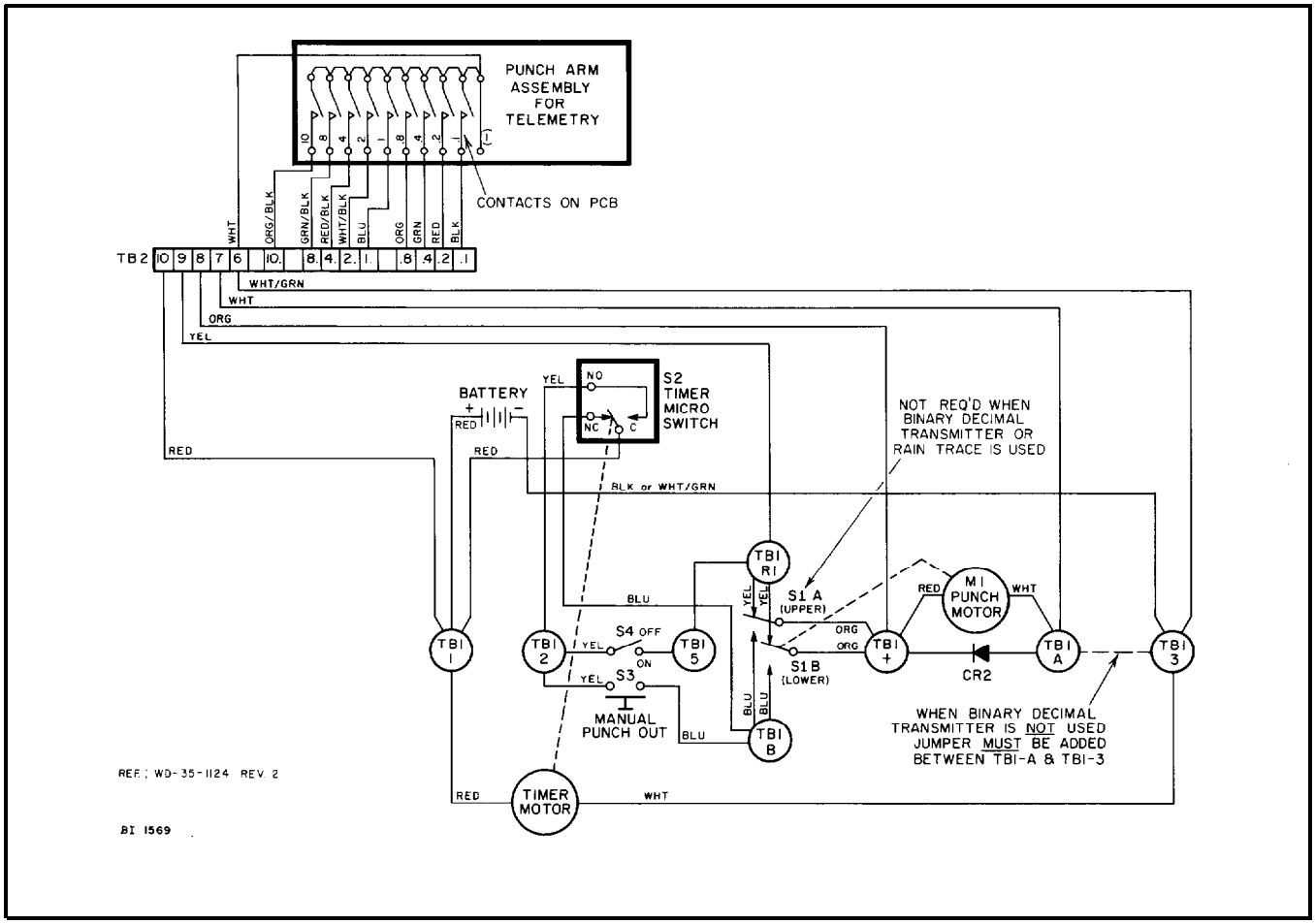

FIGURE 9 DC PRECIPITATION GAGE, ELECTRO-MECH TIMER AND TELEMETRY

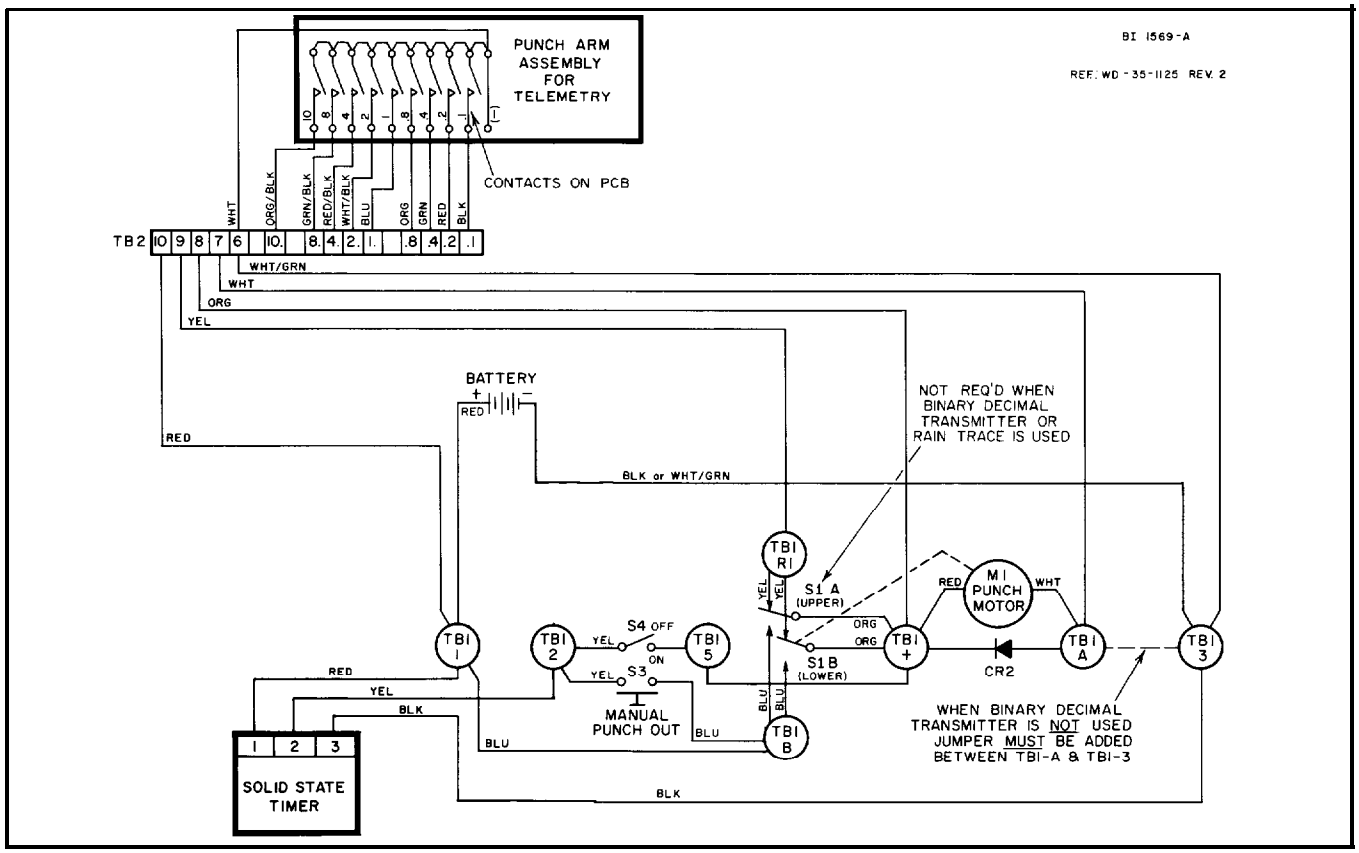

FIGURE 10 DC PRECIPITATION GAGE, SOLID STATE TIMER AND TELEMETRY

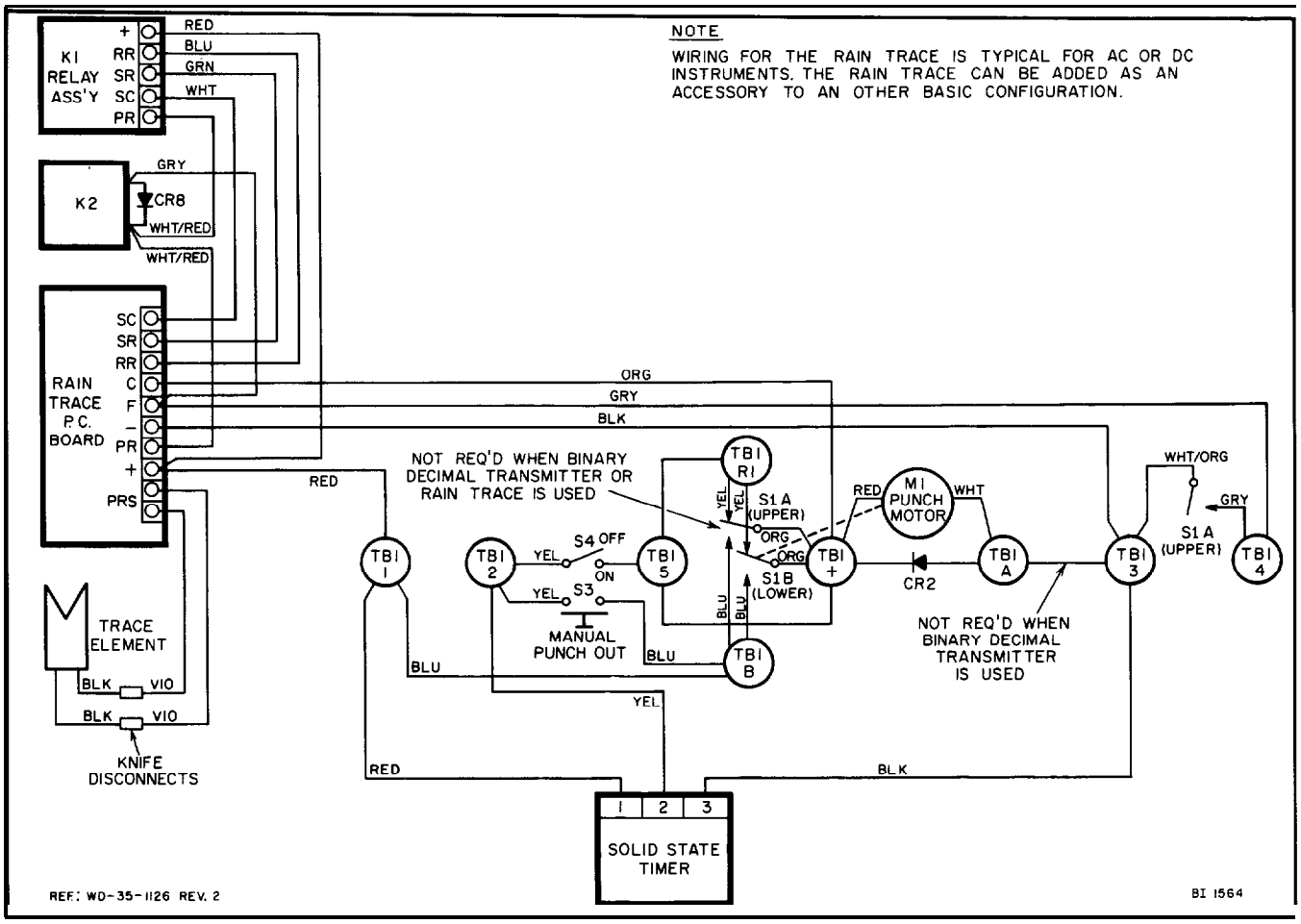

FIGURE 11 DC PRECIPITATION GAGE, SOLID STATE TIMER AND RAIN TRACE

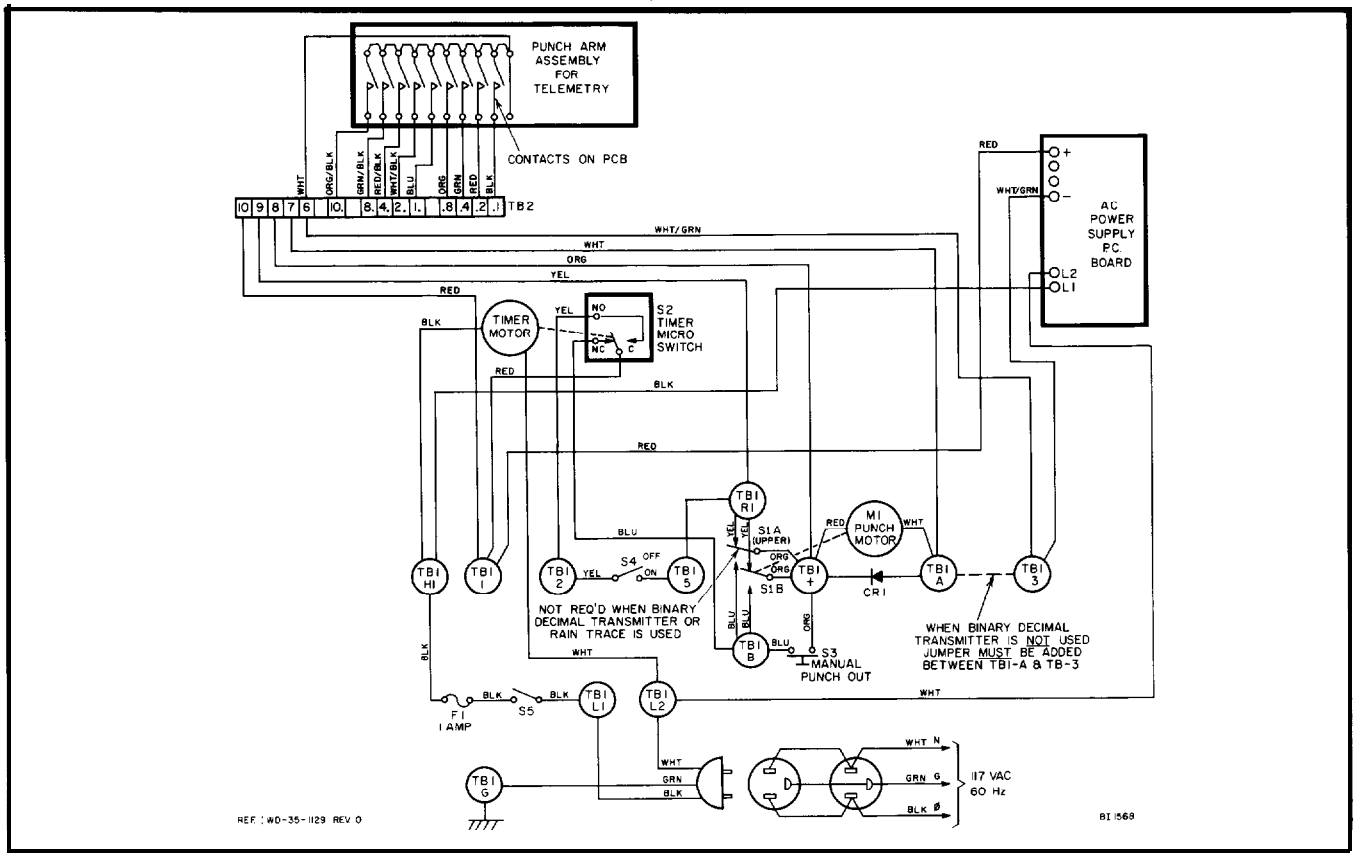

FIGURE 12 AC PRECIPITATION GAGE, INTERNAL TIMER AND TELEMETRY

6) Tear the tape in two, four inches below the last recorded position, leaving the unrecorded end loose.

7) Roll up the remaining length of recorded tape onto the take-up spool, winding it tightly.

If the instrument has been furnished with a tape assembly capable of storing 3 months supply of 15-minute tape or 1 month's supply of 5-minute tape -

a) Remove the recorded tape from the take-up spool; slip the recorded tape off the spool by grasping the inner and outer tape roll surfaces with the thumb and forefinger, at the cut-out position provided on the spool.

If the instrument has been furnished with a special tape assembly capable of storing 3 months of 5-minute recorded tape -

b) To remove the recorded tape from the take-up spool, loosen the upper paper guide wing nut, rotate the paper guide arm clockwise, and slip the recorded tape off the spool as in step 7a above. Reposition the paper guide arm and the wing nut after removing the paper tape.

8) The removed portion of recorded tape may be inserted in a protective tube for mailing or storage. Take care not to bend or fold the roll of recorded tape, as this may cause difficulties in subsequent processing through the Fischer and Porter Automatic Translator.

9) Rethread the loose end of the recording tape, following the instructions in Section III. D., of the Installation-Operation section.

10) Check the remaining quantity of recording tape on the supply roll to see if a sufficient quantity remains for the next recording period, as determined by the supply spool index.

11) Be sure to reposition the recording tape on the drive sprocket in proper relation to the time of day. Refer to Section III. G., Installation-Operation.

C. Emptying the Collector

When the instrument is serviced, special attention should be given to the precipitation indicator scale (Refer to Figure 5) for evidence that the collector should be emptied. The indicator is graduated from 0 to 20 in increments of 5, and the area between 10 and 20 is shaded and annotated EMPTY BUCKET. If the pointer is in this shaded area, remove the hood and empty the collector by unhooking the plastic drain tube from the collector rim and lowering it to a drainage position diverting the stream away from the instrument (See Figure 3). Rehook the drain tube and replace the hood.

D. Changing the Time Cycle

To change the timing cycle of the Recorder (e.g., from 5 minute punch out intervals to 15 minute intervals), it is only necessary to change the timing cam and recording tape. Refer to Figure 5; this field change may be accomplished with a minimum effort, as follows:

With respect to the dc timer, the timing cam is fixed to the timer shaft by means of a knurled nut and washer. Remove the nut and washer, slide the timing cam off the shaft. With respect to the ac timer, loosen the set screw in the knurled knob, and slide the timing cam off the shaft. Replace with the new timing cam.

If the precipitation gage is equipped with a solid state timer, the time cycle can be changed by moving the arm on the toggle selector switch on the timer case to the desired interval.

The recording tape must also be changed to conform with the new timing cycle.

E. AC/DC Interchangeability

A certain amount of flexibility is provided in changing from an ac to dc operated instrument and vice versa. This interchangeability is accomplished by substituting the proper Timer Bracket (fastened to the front plate by 3 screws) and applying appropriate power (117 vac or 7.5 vdc).

The battery for a dc instrument normally mounts on the left side of the base plate, upon the three battery pads. Three other pads are provided on the right side of the base plate so that when an ac model is converted to a dc service, the battery may be placed on the right side without disturbing the ac condulet. These right side battery pads are of sufficient height to clear the telemetering terminal block, if so provided.

In addition, when an electronic timer is substituted, it mounts at the left battery pad site, necessitating removal of the battery to the right pad position.

PRINCIPLES OF OPERATION

I General

The Series 1558 and 1559 Precipitation Gage-Recorder mechanically measures and converts the weight of the precipitation into angular positions of a rotating shaft and then into a coded digital output.

PRINCIPLES OF OPERATION (Continued)

Operation of the Precipitation Gage-Recorder can be described by considering it as four interrelated mechanisms; these are the enclosure-orifice, the weighing mechanism, the drive shaft and the gearing, and the punch programming system. The orifice defines the area over which the precipitation is measured. The weighing system operates by a bucket accumulator (collector) applying weight upon a spring scale. Motion of the scale is converted to successive positions of a code disk. By means of a clock mechanism, the punch programming system initiates the punchout demand and establishes the punching and reset operations required for recording measured values on a paper tape. The following paragraphs describe these functions in detail.

II Enclosure

The enclosure is constructed in two parts; an upper and a lower section; refer to Figures 2 and 3. The upper section, referred to as the hood, is in the shape of a truncated cone and is easily removable for emptying the collector. The orifice is 8 inches in diameter and is located at the top of the enclosure. The edge of the orifice presents a sharp edge to precipitation. A cylindrical section extending 9.5 inches below the orifice and terminating in a removable funnel having a half inch diameter opening at its inverted vertex; directs the precipitation, entering the instrument, into the collector.

The lower section of the enclosure is cylindrical in shape and is also easily removable for servicing the weighing and recording mechanism. A door is provided for ease in reading the gage. The padlock must first be removed allowing the latch cover to be removed. Two latches are provided for door operation. This feature prevents unauthorized persons from tampering with the instrument, while it is "on station".

The entire instrument is dust gasketed and mounted to a sturdy metal base 20 inches in diameter and having three 9/16 inch holes for mounting to a deck or concrete pad.

III Measuring Element

The measuring element consists of the collector, a weighing scale and an indicating dial; refer to Figures 3 thru 7 and 13. The collector has a storage capacity of the equivalent of twenty-five inches of liquid precipitation. In case of overflow conditions, the lower section of the enclosure forms a shield around the mechanism to protect the sensitive gage components from water damage. A plastic tube hooks over the rim of the collector and may be used to empty the collector.

The collector is mounted on a force post that extends upward from the lower section of the enclosure. As the weight of accumulated precipitation in the collector increases, a downward force is exerted upon the post to a support arm assembly. The support arm is mounted to the front of a scale. The support arm is the vertical leg of a parallelogram and two cantilever beams form the horizontals of the parallelogram. The connecting points of the parallelogram form a cross-spring flexure. The downward force exerted upon the post bends the flexures. The cantilever beam pivots downward exerting a force upon a helical spring. The helical spring is made of an iso-elastic material that is virtually unaffected by temperature and humidity. The base of the support arm assembly is immersed in an oil filled dashpot to dampen out turbulence.

Attached to the base of the support arm assembly is a steel cable that is wrapped around a pulley and is anchored to the top of the support arm assembly by a spring. The vertical motion of the force post is converted by the cable into angular motion of the pulley. In this manner the vertical motion of the force post serves to rotate the pulley and an input driving gear and in turn, the input shaft of the code disk thru a spur gear.

Increasing precipitation continuously affects the weighing mechanism so that at any given instant the code disk is representative of the total precipitation in the collector.

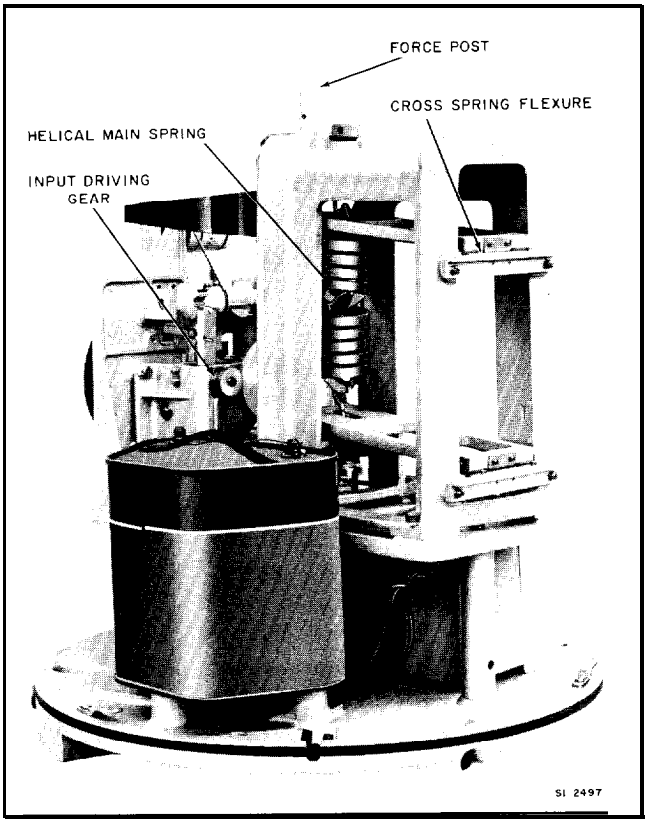

FIGURE 13 PRECIPITATION GAGE-RECORDER, REAR VIEW

IV Input Gearing and Code System

A. Input Shaft and Gearing

The input shaft receives rotary motion from the weighing mechanism pulley and the input drive gear. Refer to Figure 14. Fastened to the forward end of the input shaft is a detent wheel having 100 teeth, to which is attached the analog code disk. Mounted axially and fixed to the shaft, is a worm gear. Mounted at the end of the worm gear, is a collar butting against a rocker arm, that is used to move the worm gear axially against the pressure of a spring. The function of this rocker arm will be discussed later. Attached to a transverse shaft and driven by the worm gear is a worm wheel having 100 teeth. Attached to the other end of the transverse shaft is a 54-tooth pinion gear meshing with and driving a 54-tooth spur gear.

Attached to this spur gear is an arm whose rotational travel is 7 degrees. The forward edge of this arm is used to actuate a punch, representing the ten digit of the measured value. With the Precipitation Gage measuring the range of from 0 to 19.5 inches of precipitation, the punch for the ten digit ("1") is actuated after the code disk had made one complete revolution.

B. Code Disk

The code disk has 100 radial positions in accordance with the aforementioned detent wheel; refer to Figure 15. On the front surface of the code disk and associated with each of the 100 ratchet teeth positions, is an arrangement of hills and valleys. At any point on the disk, this arrangement represents, in binary decimal code, the amount of precipitation in the collector.

These hills and valleys on the front surface of the code disk are used to actuate the proper punches when recording the registered value. This subject will be discussed later. A circular dial is mounted in the center of the code disk. The dial is engraved with 200 graduations and is appropriately indexed. A pointer indicates the accumulated precipitation and is visible through the opened door or when the instrument cover is removed. This makes possible a visual reading at any time during instrument operation. In addition, a vertical scale precip-

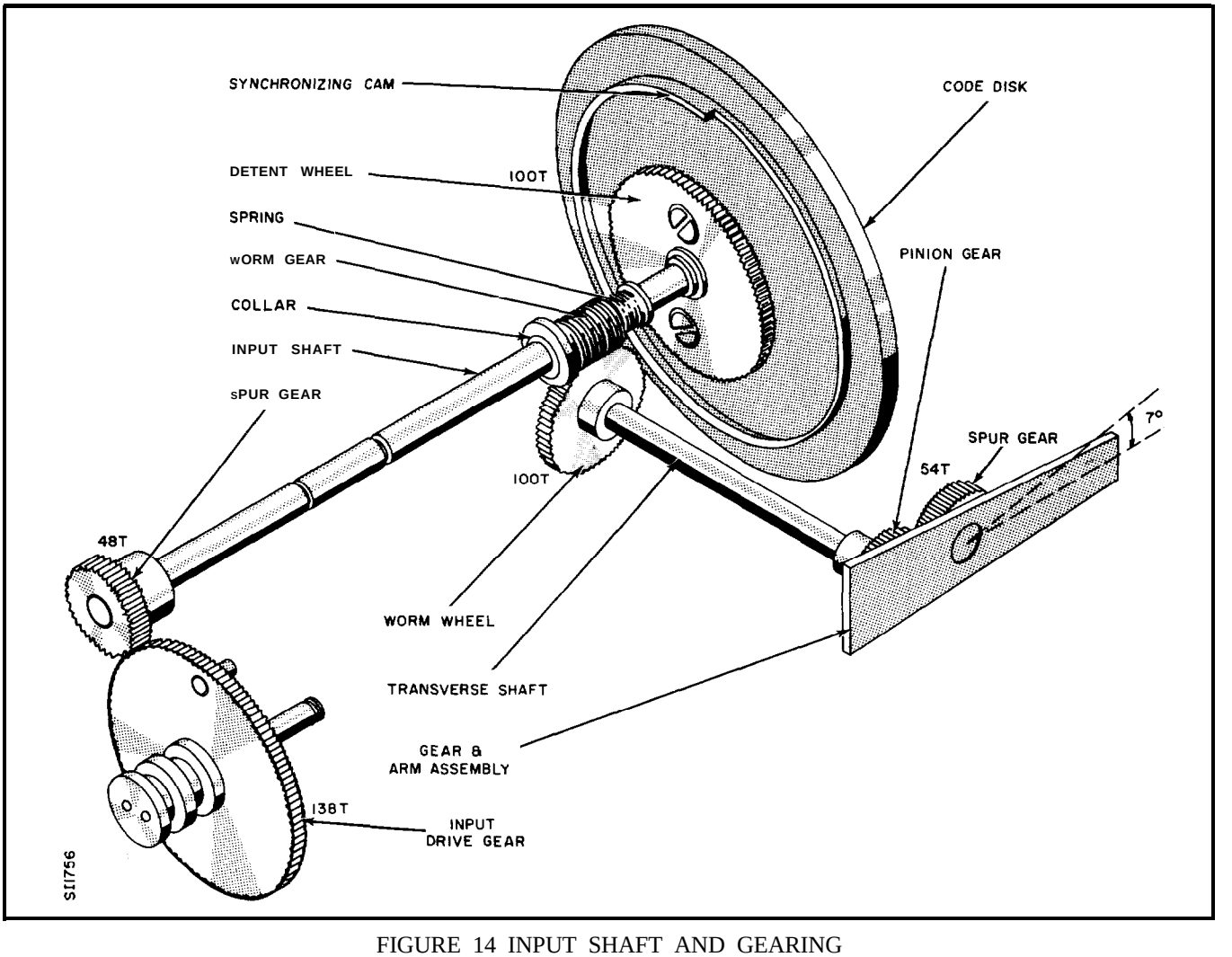

FIGURE 14 INPUT SHAFT AND GEARING

itation indicator graduated in increments of 5 inches is fixed to the front plate. A pointer attached to the support arm assembly moves in a vertical plane to provide approximate indications of accumulated precipitation. The scale area between 10 and 2C (inches) is shaded and marked EMPTY BUCKET to call attention as to when the collector should be emptied.

V Programming System

A. Timer Unit

The mechanical timer unit, shown in Figure 16, consisting of a clock, cam, follower and switch assembly, is mounted to the left of the front plate of the Recorder. In the dc models the clock is encased in a plastic container and derives its operating power from the 7.5 vdc dry cell. In the ac models, the clock is a synchronous motor operating from the ac line. The clock continuously rotates a cam, so arranged that the switch is actuated every 5, 6, 15, 30 or 60 minutes. The cam is also used for setting the clock time of day within the specified cycle.

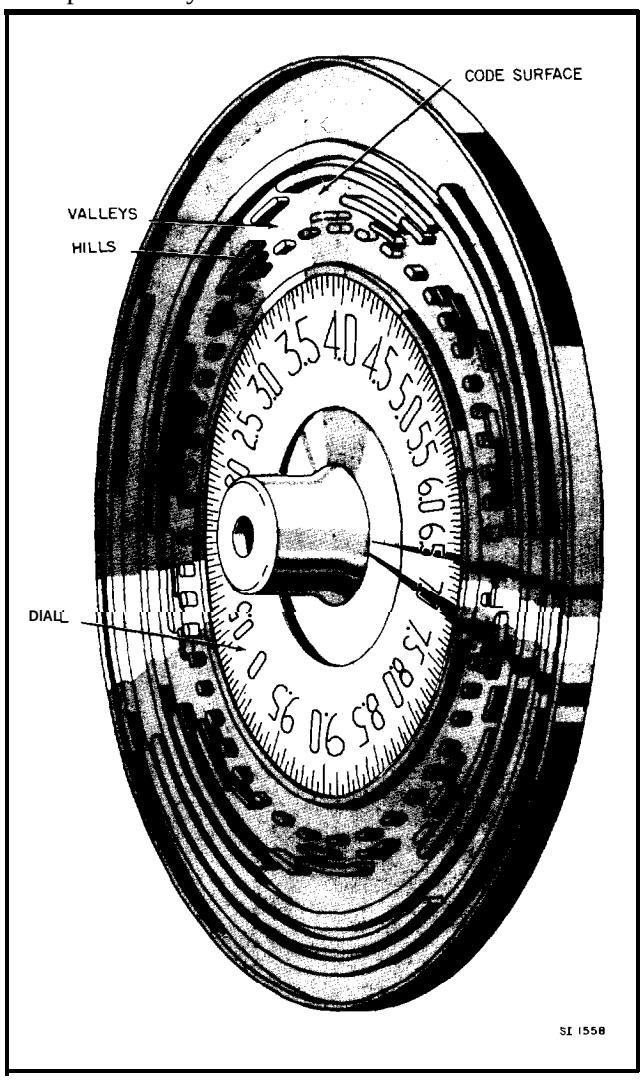

FIGURE 15 CODE DISK

An electronic timer can be furnished to automatically program the punch out without utilizing cams and switches. In this instance, those components are removed from the bracket.

The electronic timer consists of a precise crystal oscillator whose frequency is counted by cascaded flip-flop circuits. The resultant count of the last stage is the time cycle of the timer through a silicon controlled rectifier. The crystal is excited by the Recorder's 7.5 volt battery. The timer has a current drain of approximately 3 milliamperes.

B. Drive Motor and Switch

The source of programming power is derived from a small gear motor operating from the 7.5 vdc power source; refer to Figure 23. This motor drives a shaft to which is mounted a series of actuating cams utilized for programming purposes. In order to obtain a single revolution of the programming shaft for each punch cycle, a switch and motor cam arrangement is used. This initial drive is derived by means of the switch cam follower riding on the periphery of the timer cam.

Refer to Figures 17, 18 and 19, schematic diagrams and Figures 20 and 21 the timing cycles as an aid to the following text.

With respect to the A suffix models (having a mechanical timer) ; when the timer cam follower drops from the high portion ("home" position) to the low portion of the cam, the timer switch, S2, closes and applies power to the punch motor through punch motor switch contacts, S1. The

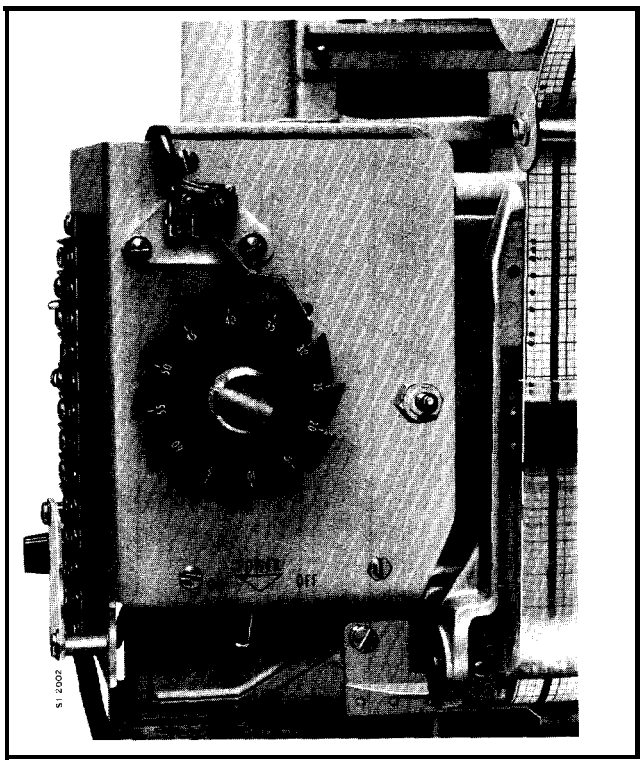

FIGURE 16 TIMER UNIT

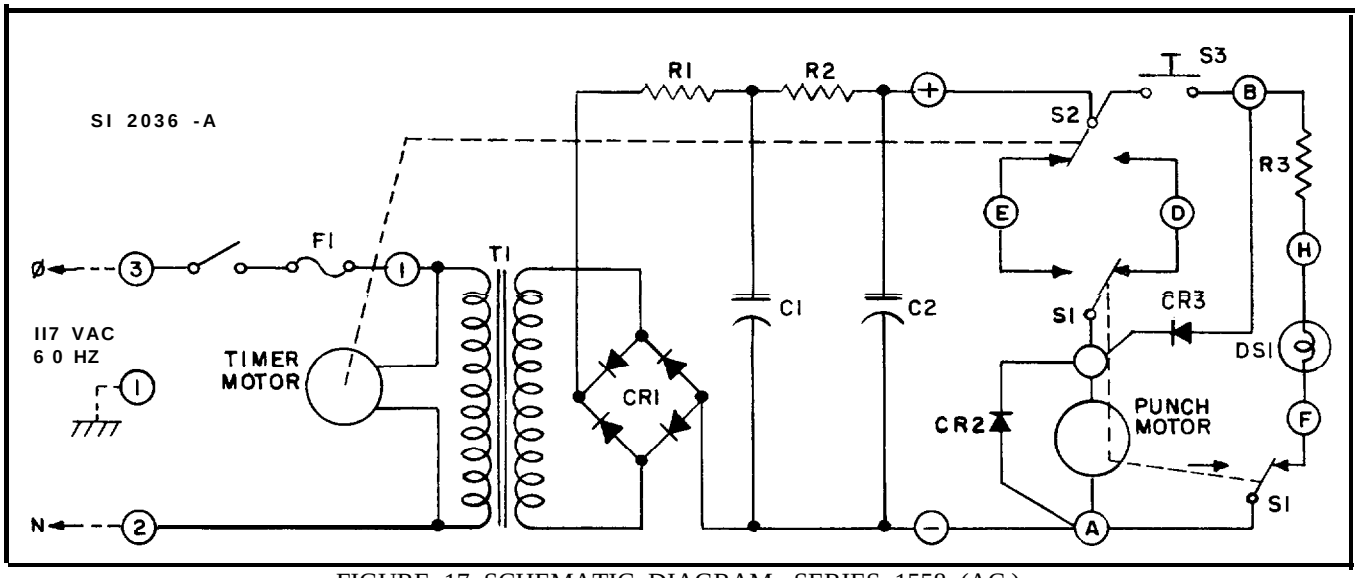

FIGURE 17 SCHEMATIC DIAGRAM; SERIES 1558 (AC.)

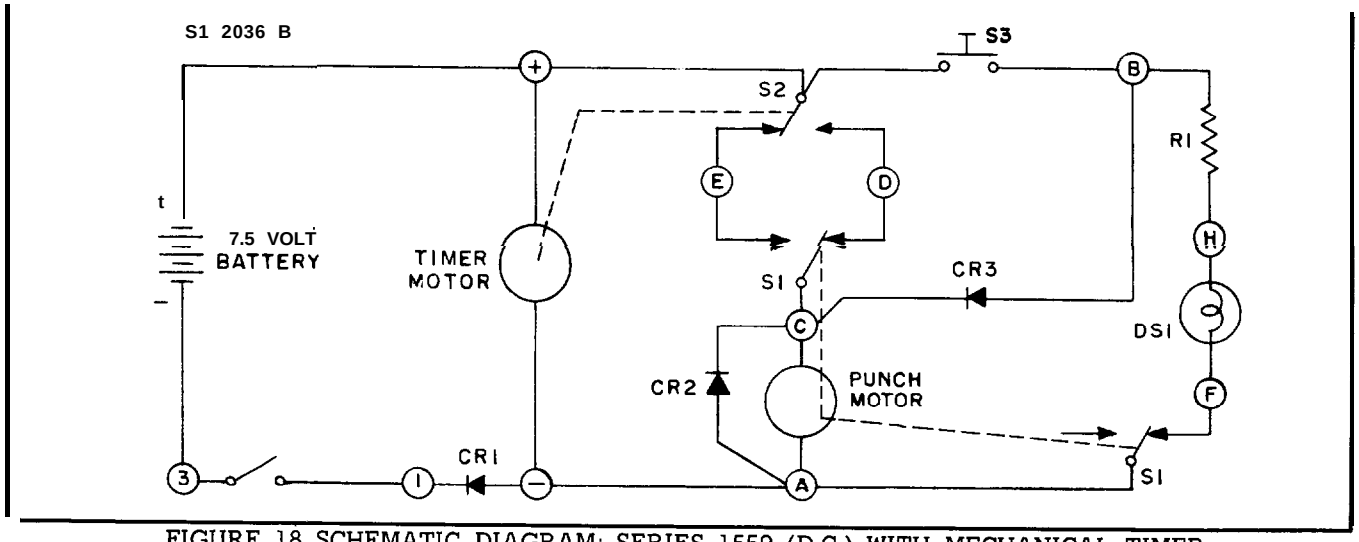

FIGURE 18 SCHEMATIC DIAGRAM; SERIES 1559 (D.C.) WITH MECHANICAL TIMER

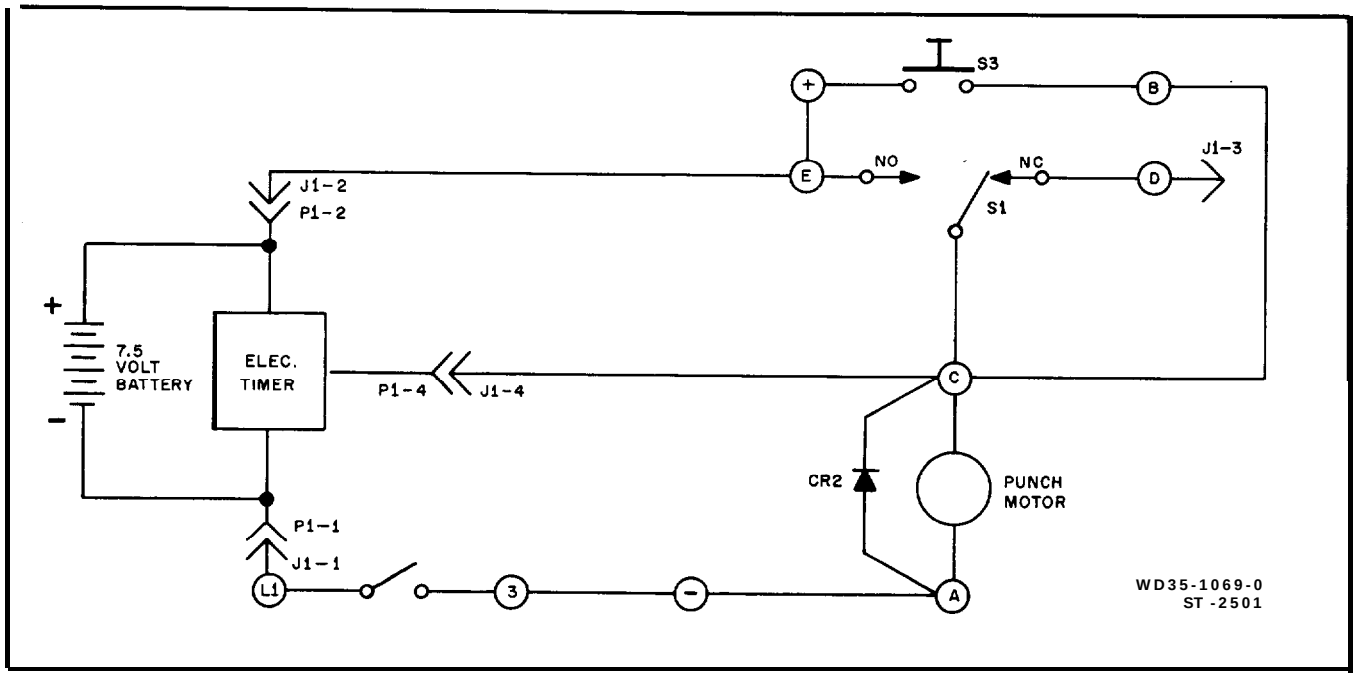

FIGURE 19 SCHEMATIC DIAGRAM; SERIES 1559 (D.C.) WITH ELECTRONIC TIMER

punch motor remains energized until the motor switch leaf drops from the high portion to the low portion of the motor switch cam, approximately 306 degrees or 85% of the total cam shaft rotation, thereby de-energizing the punch motor. During this rotational period, punch out is accomplished and then the input shaft is unlocked, it is free to rotate and to accept input signals.

The timer unit switch, S2 remains in the closed position while the actuating lever slowly rides upward to the high position of the timer cam, after which the switch contacts reverse to once again complete an energizing circuit to the punch motor. The punch motor operates to complete the 15% required for one revolution of the cam shaft, at which time the motor switch cam operates the motor switch to break the energizing circuit.

With respect to the B suffix models (having an electronic timer) ; when the electronic timer attains the count that calls for a punch out, a silicon controlled rectifier (SCR) fires to energize the punch motor. The punch motor remains energized until the motor leaf switch moves from the low to the high portion of the motor switch cam. This transfer "shorts out" the SCR and the motor now operates directly from the battery power. During this period the tape is positioned to the next increment and punch out occurs. Upon completion of the programming shaft rotation, the punch motor switch drops from the high to the low portion of the motor switch cam, and the punch motor stops. Punch out is complete.

C. Code Disk Lock-Out

Mounted on the programming shaft, at the end furthermost from the drive motor, is the code disk locking cam; refer to Figures 22 and 23. This cam engages the rocker arm cam rider at the upper end of the rocker arm. The rocker arm is pivot-fastened at the base and is spring augmented so that it is held in the rearward position by means of the locking cam, when inactive. The rocker arm also has a projecting finger that engages the collar fastened to the end of the worm gear for the axial movement previously mentioned. In addition, the locking lever is pivot mounted at the mid-point of the rocker arm.

When the instrument is in the inactive position, the high portion of the code disk locking cam engages the rocker arm cam rider to hold the rocker arm in its rearmost position, with the result that the locking lever tang engages the locking lever stop and the locking lever heel is lifted clear of the detent wheel. Thus, there is no restraint imposed on the free movement of the input shaft and code disk.

Upon rotation of the cam shaft, the code disk locking arm makes a single revolution permitting the rocker arm to move slowly in a forward direction under the spring tension. As the rocker arm arm moves forward, the heel portion of the locking lever is lowered so that its sharp edge engages with the sharp edged teeth of the detent wheel, thereby immobilizing the detent wheel and the code disk. As the locking lever seats and moves forward, the toe portion engages the synchronizing cam surface on the rear of the code disk. Thus, it can be seen that upon initiation of a punch cycle, the code disk is locked in position before punch out occurs.

D. Non-Ambiguity

As the code disk completes 100 counts and passes through zero, it is required that the arm attached to the spur gear move far enough in a downward direction so as to cause a punch out of the "ten" digit of the measured value; refer to Figure 14. To eliminate all possibilities of an error as the code disk passes through zero, a mechanical cam and gearing arrangement is incorporated. Without this mechanical compensation, the possibility of error arises, since the spur gear arm moves only l/5000th of a revolution for each successive position of the code disk; yet, must permit the same readout (e.g., 0 for the 0.1 to 9.9 values) for exactly 100 successive positions of the code disk and must then assume the next coded value (e.g., 1 for the 10.0 to 19.9 values). In the specific case cited, for example, there must be absolutely no chance that the spur gear will permit reading while the code disk is still only at 99 position.

The mechanism preventing ambiguous readings consists of the synchronizing cam cast on the rear surface of the code disk and on the toe position of the locking lever. The synchronizing cam step is located so that the locking lever toe hits the high portion of the cam when the code disk is at the zero position, and hits the low portion of the cam when the disk is at the 99 position; the cam slope being uniform throughout its entire circumference.

In this manner, when the code disk is in the 90's, the locking lever moves further until the toe touches the low level of the synchronizing cam, thereby allowing the rocker arm assembly to pivot to a more forward position. The rocking arm projecting fingers push against the collar and displace the worm gear axially. This axial movement of the worm gear results in a corresponding movement of the worm wheel, and accordingly to the spur gear arm. This movement compensates for the small increment of the spur gear arm travel beyond the position that it had at the time that the code disk

Home position just prior to punch out.

Lever switches from the high to the low portion of the timer cam; timer switch applies power to the drive motor thru the drive motor switch contacts. Drive motor rotates.

Drive motor turns thru 85% of cam rotation, completing punch out. Drive motor switch drops from the high to the low portion of the cam. Drive motor stops.

Half way thru timer cycle, the switch arm rides to the high portion of the timer cam. Timer switch reapplies power to drive motor thru drive motor switch contacts. Drive motor rotates.

Drive motor rotates thru remaining 15% of cam rotation, moving recording tape to next increment. Drive motor switch moves from low to the high portion of switch cam. Drive motor stops. Home Position.

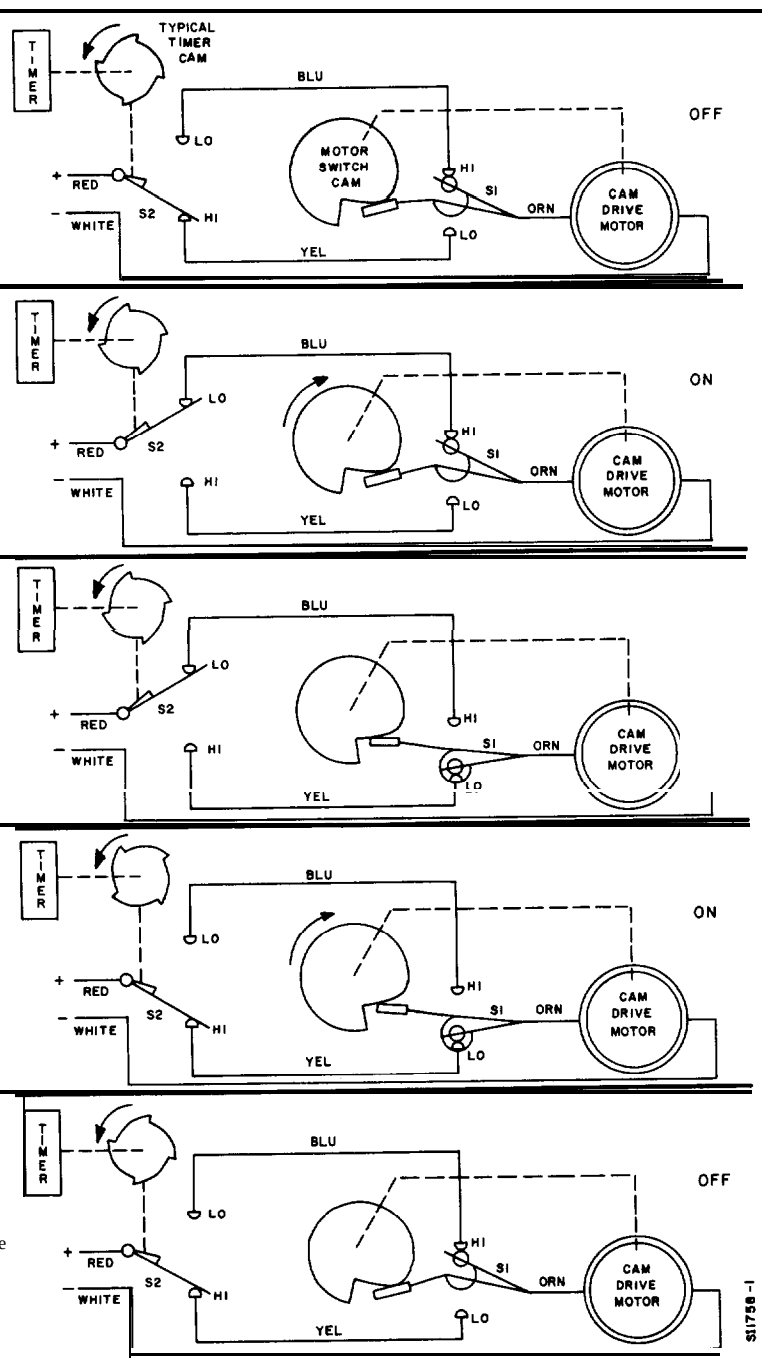

FIGURE 20 TIMING CYCLE: MECHANICAL TIMER

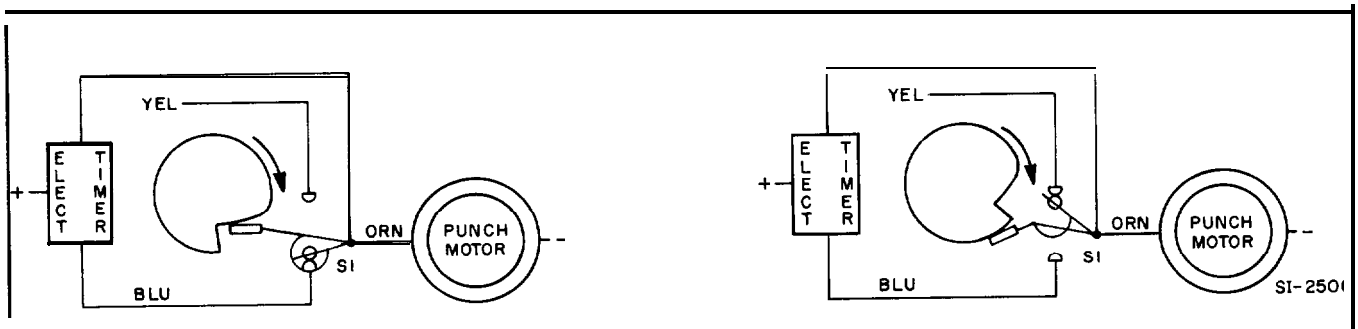

FIGURE 21 TIMING CYCLE: ELECTRONIC TIMER

was at its previous lower 99 position. In other words, this compensating movement assures that while the code disk may be in the 99 position, the spur gear arm will not prematurely advance far enough forward to the 100 position. Since the locking lever does not ride the synchronizing cam, but rather engages it only upon readout, there is no wear on the cam assembly.

E. Punch Out

Mounted at the mid-point of the programming shaft is the punch arm actuating cam; refer to Figure 23. At the rest position, this cam exerts a force against the punch rocker arm rider located at the top portion of the punch rocker arm. The punch rocker arm is pivot fastened at the base. Therefore, with this pressure exerted at the upper portion, the punch rocker arm will be held away from the main frame of the instrument.

A helical spring is so arranged that a counter force is created which tends to bring the punch rocker arm back toward the main frame and to the code disk.

Upon initial application of power to the motor, and consequent rotation of the programming shaft, the punch rocker arm rider drops off the high end of the punch arm actuating cam and, owing to the spring force exerted, the punch out dies are pulled back to the face of the code disk.

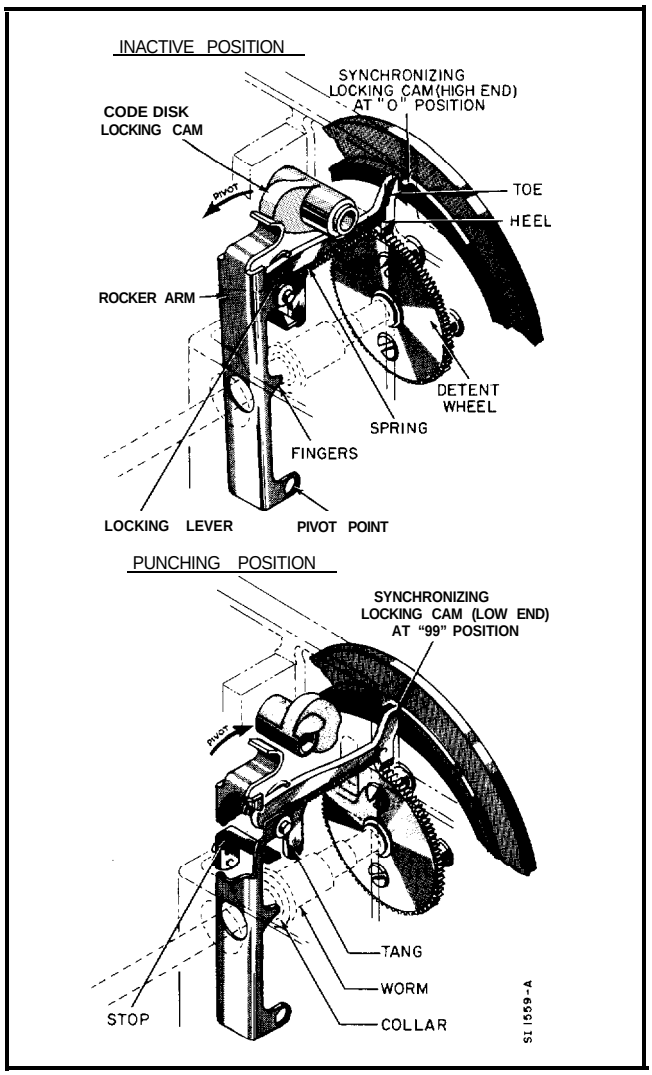

FIGURE 22 CODE DISK LOCKOUT

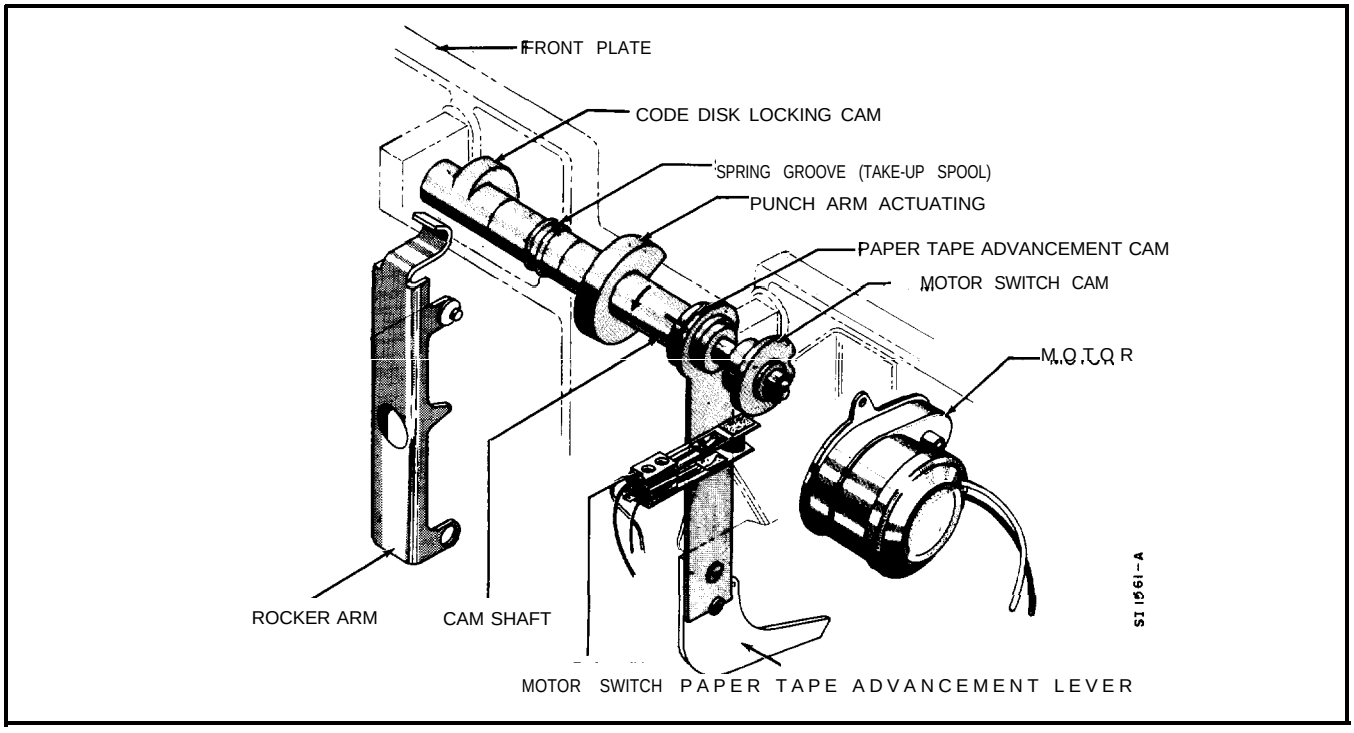

FIGURE 23 PROGRAMMING SHAFT

Detailed functioning of the punches will be discussed later.

F. Recording Tape Drive

In addition to providing energy for all of the previously described functions, the motor also provides driving energy for the recording tape feed system. The programming shaft mounts to an eccentric cam to which is fastened the paper tape advancement lever; refer to Figure 23. The lower end of the lever contains a paw1 that intermittently ratchets the tape drive sprocket advancing the recording tape exactly l/l0th inch during rotation of the programming shaft. The eccentric cam is adjusted so that the recording tape is completely advanced prior to the punch out operation.

A spring belt attached to the programming shaft (seated in a groove) supplies a driving force to the tape take-up spool. With this arrangement, the data recording tape is always held under tension.

VI Punching and Reset Mechanism

The punch arm assembly consists of the punch frame, pivot mounted by means of a shaft through its lower-most portion, and the punch holder assembly attached to the center portion. A horizontal arm at the top of the punch arm assembly has a rider which acts as a follower for the punch actuating cam on the programming shaft. A movement is imparted to the punch arm assembly by this cam; whereas the frame rider is held against the cam by the force of a helical spring.

The punch holder assembly consists of a punch holder, provided with guide openings in which the punch dies are arranged with sliding axial motion, and a punch die with mating guide openings to provide for recording tape passage. One punch is provided for each of the binary-decimal channels and two additional punches are provided for Translator sprocket alignment purposes.

As the punch arm rider drops off the actuating cam, the punch arm assembly is pulled in toward the code disk. In this manner, the punch dies come in contact with the code disk and the spur gear arm at the proper position to sense the coded value of precipitation in the collector. The individual punch die striking a hill on the face of the code disk or the spur gear arm, punches a hole in the data recording tape passing between the punch holder and the punch die. The punches that fall into a valley on the face of the code disk do not punch the recording tape. As the punch arm actuating cam continues its rotation (driven by the programming shaft), the punch arm assembly is pivoted out and away from the code disk to its normal position, and a stripper plate produces positive extraction of the actuated punches from the paper tape.

VII Code and Tape Design

The code used in arranging the hills and valleys on the front surface of the code disk, is in the binary-coded decimal system. Four binary digits (bits) with decimal weighting of 1, 2, 4 and 8 are added together to form a single decimal digit. For example, the decimal digit 3 would be formed by adding binary bits 1 and 2. The decimal digit 6 would result from adding 2 and 4, and so on up to the decimal digit 9, being a combination of the binary bits 1 and 8. The greatest count the Recorder will be required to total is a three place digital value, 19.9. To provide this range a total of 9 punches are needed, four for each of the tenths and units digits and one for the tens digits.

The punched columns on the data recording tape are printed in such a manner so as to facilitate reading the actual values directly. The tape has a total of 18 columns; 9 each on either side of the center sprocket drive hole. Each half of the tape also contains a column for punching the alignment holes required for translation purposes. To determine a value that has been punched on the tape, simply add the values of the punched holes to obtain each digit comprising the value, as indicated in Figure 1.

The recording tape used in the Punched Tape Recorder is time printed in the center. The time is based on a 24 hour clock. After each punch out, the tape will move l/l0th of an inch and will position itself for the next punch out. Since the Recorder is designed to operate at the time determined by the Timer Unit, the data recording tape

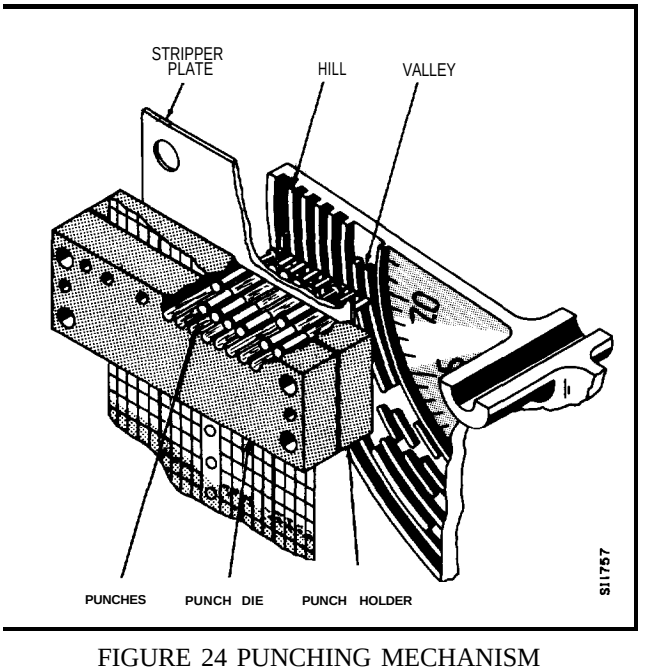

FIGURE 24 PUNCHING MECHANISM

selected for use must have appropriate time divisions between printed time designations in order to synchronize the operation of the unit with the actual time.

The recording tape is subdivided into the appropriate time increments, and under normal conditions, a 410 foot roll of 5 minute tape will last five months.

VIII Telemetering Facilities

As optional equipment, a binary-coded decimal telemetry output may be included. By means of contact closures, the same value that appears on the recording tape is telemetered to equipment at another location.

A contact board assembly is mounted on the rear of the punch arm, between the punch arm assembly and the code disk. Each one of the punches is associated with an electrical contact that closes for each hole that is punched in the tape. The electrical output from the contact leaves is brought out to a terminal board on the front plate of the instrument. The reference designations on the marker strip (refer to Figures 9, 10 and 12) aid in further interconnection to a Fischer and Porter Telemetering Transmitter for transmission to another location.

SERVICING AND ALIGNMENT

In the event that any part of the mechanical cams, gears or linkages become worn or broken, the instrument will have to be disassembled as far as necessary to replace the worn or broken parts. Disassembly is relatively simple and does not require special tools other than the wrench supplied with the instrument. *Under no conditions should parts be replaced unless a thorough knowledge of the operating principles have first been inculcated.* Reference to the illustrations and text in this Bulletin as well as the exploded drawings in the Parts List Bulletin will prove helpful in locating adjustment points and in the disassembly procedures. If parts are replaced, it may be important to assure alignment as discussed in the following paragraphs.

1. Pulley Cable

A pulley cable may be removed for replacement by unhooking the tension spring from the upper pulley cable and removing the screw that fastens the lower pulley cable to the support arm. This will disconnect the recorder from the weighing mechanism. Loosen the outer set screw on the hub face of the gear and shaft assembly; remove the outer pulley cable. Loosen the outer set screw on the hub face of the gear and shaft assembly; remove the inner pulley cable.

If a pulley cable broke under service conditions, correspondences between the low order code disk (tenths and units) and high order gear and arm assembly (tens) may be offset. Correspondence must be attained prior to installation of the replacement pulley cable; proceed as follows:

Set the code disk to 0; initiate a punch out; the tape must read 00.0. If the tape reads 10.0, rotate the code disk clockwise one revolution and repeat the punch out. If the tape still reads 10.0, continue to rotate the code disk clockwise one revolution at a time until the tape reads 00.0. If the first punch out indicated 00.0, rotate the code disk counterclockwise one revolution at a time until 10.0 is punched out. Back off one revolution clockwise. This is true zero. Place a piece of masking tape on the code disk to hold it firmly in position.

Install the inner pulley cable in the hub of the gear and shaft assembly; tighten the centered set screw on the hub face.

Install the outer pulley cable in the hub of the gear and shaft assembly; tighten the outer set screw in the hub face. Wrap the outer pulley cable in a counterclockwise direction and reconnect to the support arm by means of the binding head screw. Wrap the inner pulley cable in a clockwise direction and hook the cable to the tension spring.

2. Main Spring

Fasten the helical main spring to its lower hook; place the upper hook thru the main spring and insert the threaded end of the hook up thru the hole in the scale support. Place the D washer over the threaded end of the upper hook pushing it into the hole in the scale support until it seats firmly. Position the upper hook and D washer so that there is no twist in the spring. Lock the D washer in place with the set screw thru the front of the scale support. Thread the zero adjusting knob to the upper hook.

Place the collector on the force post and turn the zero adjusting knob until the code disk reads zero.

3. Locking Lever

By means of the locking lever, lock the code disk at zero. Adjust the locking lever stop to allow .005” to .030” clearance between the locking lever stop and the locking lever tang; tighten. With the motor switch cam in the “off” position, the locking lever heel should be approximately l/64” above the detent wheel.

4. Programming Cam Shaft

The molded witness marks (.030” wide x .015” high) on the nylon cams (code disk locking, punch actuating and paper tape advancement) must be in line with each other and offset 60° clockwise with the cam shaft pin (looking at the motor end). The stamped mark on the motor switch cam must be offset 60” counterclockwise with the programming cams (looking at the motor end). This places the drop-off point of both the punch arm actuating cam, and the motor switch cam in the same radial location. Allow approximately l/32” end play between the stacked cam assembly and the bearing blocks. The programming cam shaft must rotate freely.

5. Paper Tape Advancement lever

Initiate punch out several times to ascertain that the punched holes appear exactly on the horizontal time grid line of the data recording tape. If the punched holes are off center, shorten the lever length until proper alignment is accomplished. If this does not produce alignment, extend the lever length. It is advantageous to keep this lever as short as possible. Loosen the two screws that fasten the upper and lower sections of the lever together and adjust the length accordingly; retighten the screws.

6. Motor Switch Cam

Rotate the cam shaft until the leaf switch falls into the cam valley; then shut off power to the instrument. Depress the switch until it “clicks”; allow it to return until the switch “clicks” again. The distance between the switch and the cam should be approximately l/32 inch. Adjust the micro-switch to achieve this l/32 inch gap. Re-apply power.

Advance the cam shaft until the high position of the cam shuts off the motor. Re-energize the motor with the timer and note that the switch moves downward approximately l/32 inch. If these conditions are not met, adjust the switch.

If an electronic timer is being used, disconnect the timer and proceed as above except using an external simulated switch.

7. Punch Block Assembly

Loosen the four fillister head screws that mount the punch block to the punch arm. Position the punch block assembly so that the punches line up to strike on the center of the raised portion (hill) of the code disk. Tighten the four screws.

8. Punch Stripper Plate

With the punch arm vertical (against the stop) and the punches completely withdrawn, slide the stripper plate down approximately .005” from the milled flat on the punches and tighten. Check that all punches are captured between the milled cut out. Be sure that the stripper plate is not being forced or bent by the punches.

9. Punch Arm Cam Follower

Pull the punch arm assembly forward as far as possible (punches shall touch the rear of the stripper plate) ; hold in this position and slide the punch arm cam follower against the high lobe on the punch arm actuating cam; then back off l/64” and tighten.

10. Punching Pressure

Lock the code disk at 17.7 reading. Gradually adjust the spring pressure (by means of the screw on the front face and the locking nut on the rear of the punch arm), until the punch pierces cleanly through the paper tape; tighten l-1/2 turns further.

11. Dashpot Alignment

The grade of oil supplied is a silicone base type to meet general operating conditions.

If it is determined that the dashpot shaft is binding, loosen the four hex head mounting bolts that fasten the scale support until the dashpot shaft is free. Do not remove the dashpot can.

PARTS LIST

for

SERIES 35B1558 AND 35B1559

PRECIPITATION GAGE-RECORDER

Design level "B"

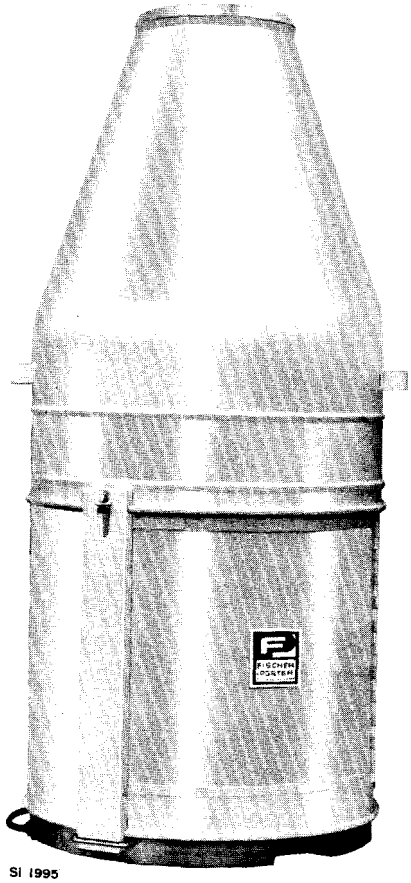

SI 1995

FISCHER & PORTER CO.
WARMINSTER, PENNSYLVANIA, U. S. A.

Model Numbering System

Refer to the Fischer and Porter Manufacturing Specification Sheet or the instrument data tag for the specific model number of the instrument furnished. The details of a specific model number are shown below.

35 B 15 58 E A 1 2 A C 2

Catalog Prefix

Design Level

Analog to Digital Punched Tape Recorder

Application

58 = AC Precipitation Gage Service (120 vac 60 Hz)
59 = DC Precipitation Gage Service (7.5 vdc.)

Count Ratio

E = 0.1 Inch per Count
N = 1.0 Millimeter per Count

Transmission Facilities

A = No Transmission Facilities
D = Binary Decimal Transmission

Recording Method

1 = Punched Tape

continued next column

35 B 15 58 E A 1 2 A C 2

Timer

1 = 15 Minute Timer
2 = 30 Minute Timer
3 = 60 Minute Timer
4 = 5 Minute Timer
6 = 6 Minute Timer

Clock Mechanism

A = Mechanical (ERGAS)
B = Electronic (Solid State)
C = AC Synchronous

Accessories

C = Rain Trace Detector
X = Not Required

Bucket Configuration

1 = Standard Bucket
2 = Self-Syphon Bucket

CASE ASSEMBLY

KEY	PART DESCRIPTION	PART NUMBER	QUANTITY
1	HOOD: Metric w/ Manual Drain Bucket	612B160U01	1
	Metri w/ Self-Syphon Drain Bucket	612B160U02	
2	HOOD: Standard w/ Manual Drain Bucket	612A554U01	1
	Standard w/ Self-Syphon Drain Bucket	612B143U01	
3	FUNNEL	351C101U01	1
4	BUCKET, Manual Drain	617A183U01	1
5	NOZZLE & CLIP	628A306B10	1
6	*TUBING, Tygon: 7/16" O.D. x 5/16" I.D. x 12" Length	361A203U22	1
7	BUCKET, Self-Syphon Drain	617B021U01	1
8	*TUBING, Tygon: 3/8" O.D. x l/4" I.D. x 18" Length	36lA203U04	1
9	GROMMET	104B002U01	1
10	LOWER CASE ASSEMBLY	612A286U01	1
11	*GASKET, Door (Specify Part Number and 60" Length)	116A035U01	1
12	CEMENT, Door Gasket (1 Pint Can)	145A002U01	1
13	COVER, Latch	379D225U01	1
14	LATCH, Door	124C032U01	2
15	SCREW, Pan Head: #4-40 x 3/8"	006F006Tl0	4
16	WASHER, Lock: #4	085H004S31	4
17	NUT, Hex 4-40	080F200T10	4
18	DOOR ASSEMBLY	613A122U01	1
19	TAG, Tape Feed Instruction	338E295U01	1
20	BOLT, Carriage: #l0-24 x l/2"	395A032U01	4
21	SPACER	376L177U01	4
22	WASHER, Lock: #10	085H010S31	4
23	NUT, Hex: #10-24	080M200T10	4

* INDICATES RECOMMEND SPARE PARTS

REF.: 612B122

I M P O R T A N T

When ordering spare parts please refer to the Fischer & Porter serial and model number referenced on the instrument data tag.

COPYRIGHT APRIL 1972 FISCHER & PORTER CO

PARTS LIST

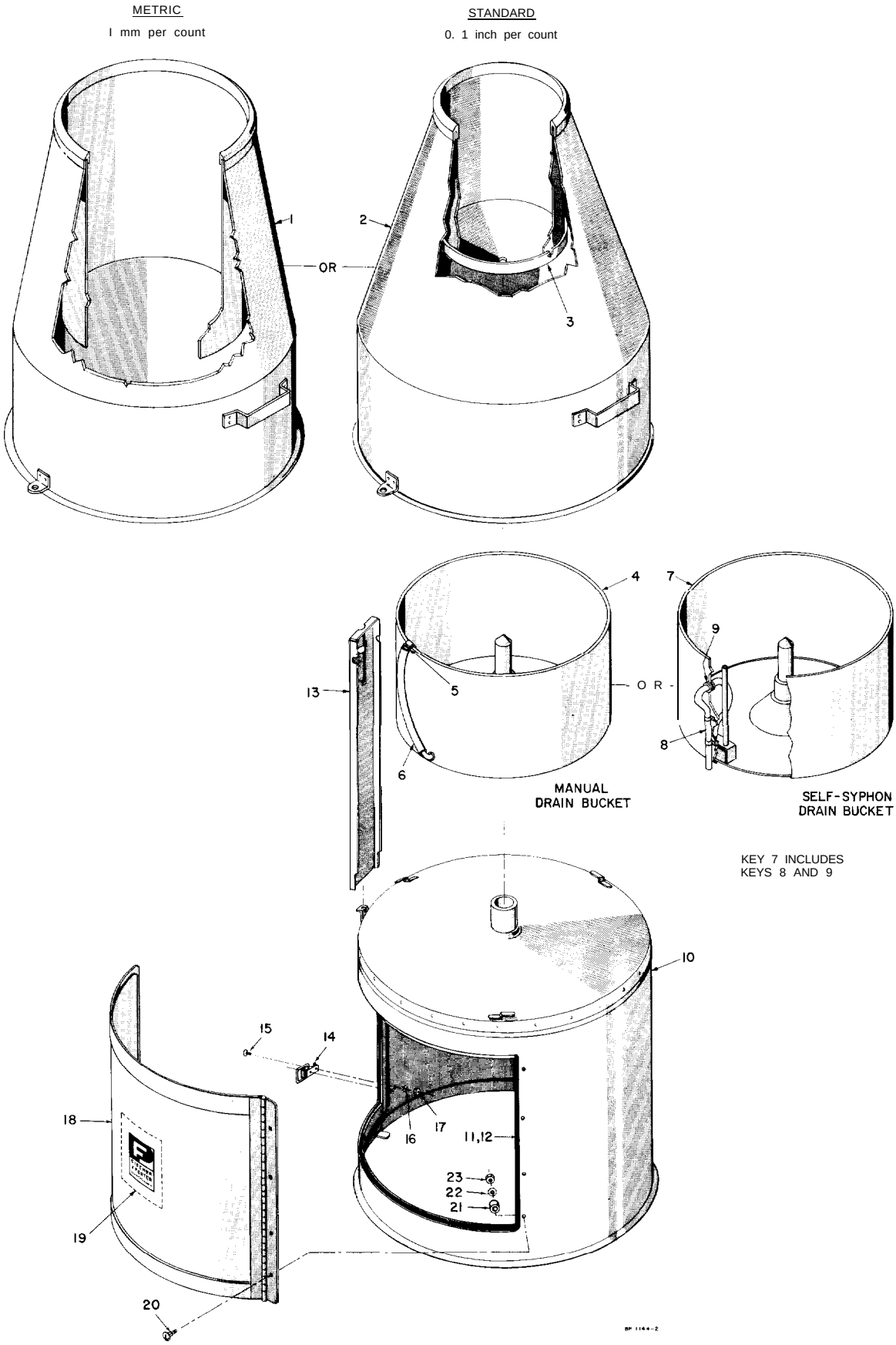

KEY 7 INCLUDES
KEYS 8 AND 9

BASE PLATE COMPONENTS

KEY	PART DESCRIPTION	PART NUMBER	QUANTITY
1	BASE	624A502U0l	1
2	BRACKET, Tape Supply	353B998U0l	1
3	SPOOL ASSEMBLY, Left	655A994X99	1
4	SPOOL ASSEMBLY, Right	655B008U0l	1
5	"0" RING	l0lA705U0l	1
6	WASHER, Flat	377A259T12	3
7	PLUG, Pipe	112A345U03	2
8	SCREW, Pan Head: #4-40 x l/4"	006F004Tl0	6
9	SCREW, Hex Head: #l0-32 x 7/16"	0250012Tl0	2
10	SCREW, Pan Head: #10-32 x l/2"	006L008Tl0	1
11	WASHER, Lock #l0	085D0l0S31	2
12	*WEATHER STRIPPING (Specify Part Number and 54" Length)	116A061U0l	1
13	BASE, Scale	354D144U0l	1
14	SCREW, Pan Head: l/4-28 x l/2"	036A008Tl0	1
15	BOLT, Hex Head: l/4-20 x l-5/8"	040B158Tl0	2
16	WASHER, Lock: l/4"	085D416S31	4
17	STEM & WASHER ASSEMBLY	636A151U0l	1
18A	DASHPOT	150B067U0l	1
18B	*BOTTLE & DAMPING OIL ASSEMBLY	617A189X99	1
19	GASKET	333G130Ql0	1
20	SCREW, Pan Head: #4-40 x 3/16"	006F003Tl0	4
21	SCREW, Pan Head: l/4-20 x 2-l/2"	036B248Tl0	1
22	BOLT, Hex Head: l/4-20 x 1"	040B108Tl0	1
23	NUT, Hex: l/4-20	081B200Tl0	2
24	TAG, Instruction	338Dll0U0l	1
25	BOLT, Hex Head: l/4-20 x l-3/8"	040B138Tl0	1
26	WASHER, Flat	377N314Ql0	1
27	POST, Support	403B208A12	3
28	CLIP, Latch	390C051T12	3
29	*TAPE, Recording: 15 Minute Graduations: Paper	212B0l0U0l	1
30	*TAPE, Recording: 15 Minute Graduations: Foil	212B0l0U02	1
31	*TAPE, Recording: 15 Minute Graduations; Paper*	212B029U0l	1
32	*TAPE, Recording: 30 Minute Graduations: Paper	212B012U0l	1
33	*TAPE, Recording: 30 Minute Graduations: Foil	212B012U02	1
34	*TAPE, Recording: 60 Minute Graduations: Paper	212B008U0l	1
35	*TAPE, Recording: 60 Minute Graduations; Foil	212B008U02	1
36	*TAPE, Recording: 5 Minute Graduations: Paper	212B009U0l	1
37	*TAPE, Recording: 5 Minute Graduations; Foil	212B009U02	1
38	*TAPE, Recording: 6 Minute Graduations: Paper	212B015U0l	1
39	*TAPE, Recording: 6 Minute Graduations: Foil	212B015U02	1
40	SCREW, Pan Head: #6-32 x 3/8"	006H006Tl0	1
41	WASHER, Flat: #6	085A006T10	3
42	HARNESS, Wiring	667B152U01	1
43	CLAMP, Cable: #6	108A006U01	2
44	SCREW; Fillister Head: #6-32 x 7/16"	004H00710	4
45	TERMINAL BOARD	171F017U01	1
46	MARKER STRIP	358D832U01	1
47	SCREW, Pan Head: #6-32 x 5/16"	006H005T10	2
48	CLAMP, Cable: #4	108A004U01	1
49	TRAY, Battery	354D239U01	1
50	CABLE ASSEMBLY	677A790U0l	1
51	TRAY, Battery	354D239U0l	1
52	HARNESS ASSEMBLY	677B130U0l	1
53	*TIMER, Electronic (Solid State): 15, 30, 60 Minute Cycle	665B007U04	1
54	*TIMER, Electronic (Solid State): 5 Minute Cycle	665B007U05	1
55	*TIMER, Electronic (Solid State): 6 Minute Cycle	665B007U06	1
56	BRACKET, Mounting	353E086U01	1
57	SCREW, Pan Head: #6-32 x 3/8"	006H006T10	1
58	NUT, Hex: #6-32	080H202T10	1
59	SCREW, Hex Head: #l0-32 x l/2"	025L008T10	2
60	WASHER, Lock: #lO	085D010S31	2
61	WASHER, FLAT #10	085A010T0	2
62	PLUG & CABLE	173D057U01	1
63	SCREW, Fillister Head: #l0-32 x 3/8"	004L006T10	2
64	WASHER, FLAT: #10	085A010T10	2
65	Box, Electrical	150B020U10	1
66	COVER, Electrical Box	150B023U01	1
67	OUTLET, Grounding	172B038U0l	1
68	Connector	150A012U0l	1

Telemetering Models

Mechanical Timer

Electronic Timer

AC Synchronous Timer

* INDICATES RECOMMENDED SPARE PARTS
*WITH OVERPRINTING: RENEW TAPE NOW

REF.: BM 35-1528
DS-51C4000

PARTS LIST

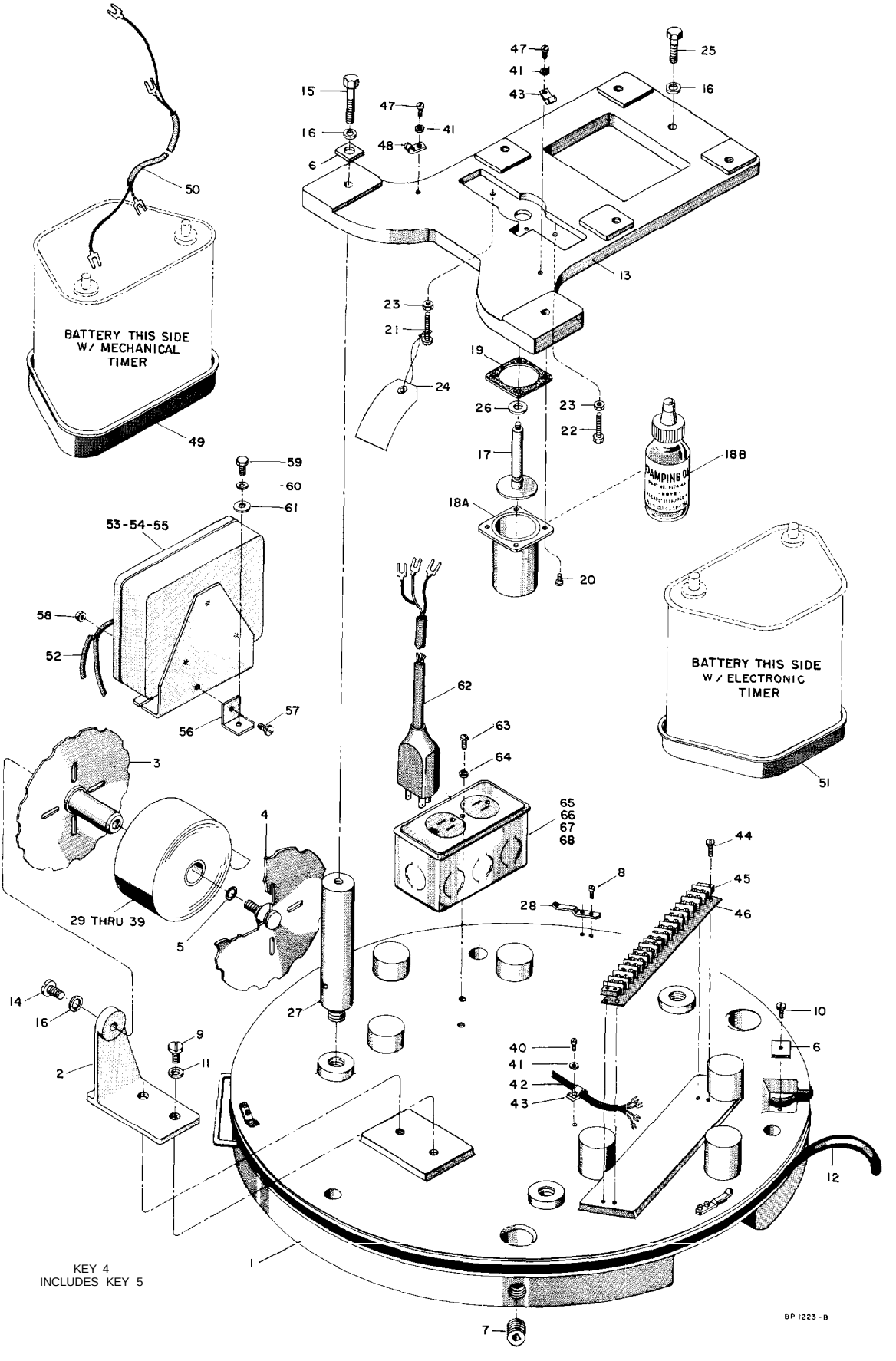
BATTERY THIS SIDE
W/ MECHANICAL
TIMER
BATTERY THIS SIDE
W/ ELECTRONIC
TIMER
DAMPING OIL
29 THRU 39
53-54-55
KEY 4
INCLUDES KEY 5
BP 1223-B

WEIGHING MECHANISM COMPONENTS

KEY	PART DESCRIPTION	PART NUMBER	QUANTITY
126	BOLT, Hex Head: l/4-20 x 3/4"	040B012Tl0	4
127	WASHER, Lock: l/4"	085D416S31	4
128	SUPPORT, Scale	354C263S70	1
129	BRACKET, Flexure	353B722A21	4
130	SCREW, Fillister Head: #8-32 x 3/8"	004K006Tl0	8
131	WASHER, Lock: #8	085D008531	8
132	* FLEXURE, Horizontal	424K047N41	4
133	* FLEXURE, Vertical	424K048N41	4
134	PLATE, Clamp	355H703A14	8
135	PLATE, Clamp	355H704A14	8
136	SCREW, Fillister Head: #4-40 x l/4"	004F004Tl0	32
137	WASHER, Lock: #4	085D004531	36
139	ARM, Lever	399C047A25	2
141	BRACKET, Range Adjust	353D122T12	1
142	SCREW, Pan Head: #4-40 x l/4"	006F004Tl0	2
144	SCREW, Range Adjust	396G098T30	1
145	RING FASTENER, External	106A203U0l	1
146	COUPLING ASSEMBLY	633A119X99	1
148	SPRING, Main	424B058X99	1
149	HOOK, Upper Main Spring	396C130T30	1
150	WASHER, D: Upper Hook Guide	355G045T12	1
151	SET SCREW, Hex Hole, Cup Point: #6-32 x 3/8"	019H006S31	1
152	KNOB, Zero Adjust	411A088V60	1
153	SUPPORT ARM ASSEMBLY	642A163X99	1
155	POST, Scale	403C099A12	1
162	POINTER	410C59A15	1
163	SCREW, Fillister Head: #4-40 x l/4"	004F004Tl0	2
165	*CABLE ASSEMBLY, Mechanical Drive	667A379U0l	2
172	SCREW, Pan Head: #2-56 x 3/16"	006D003Tl0	1
173	*SPRING	424B057T12	1
174	NAMEPLATE, Identification (Blank)	338C001A30	1

* INDICATES RECOMMENDED SPARE PARTS

REF.: 614B324

PARTS LIST

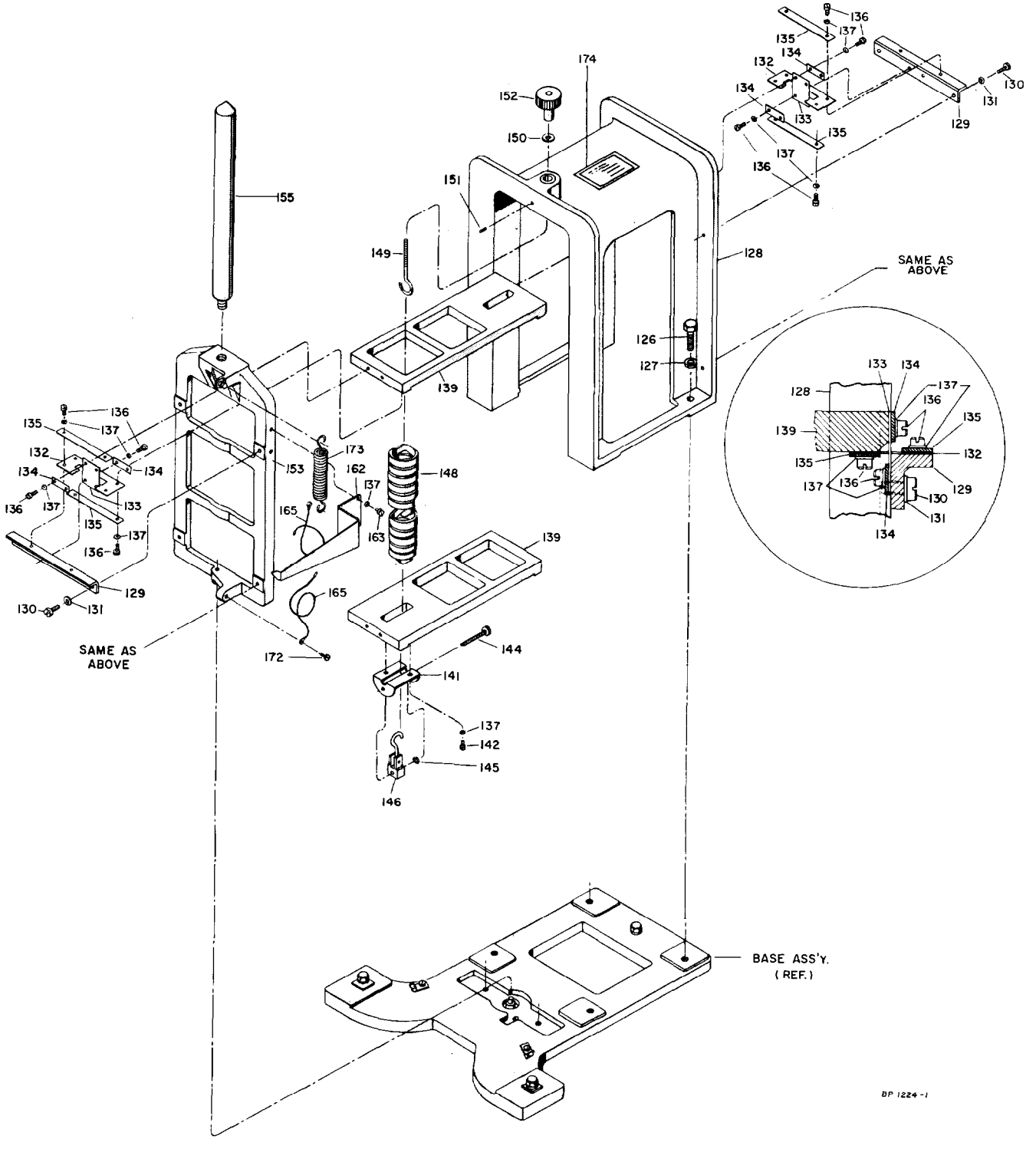

136
135
137
134
132
134
133
135
137
136
130
131
129
174
152
150
151
155
149
128
SAME AS ABOVE
126
127
139
133
134
128
137
136
135
139
132
135
136
137
129
130
131
134
136
135
137
132
134
133
136
137
135
137
136
129
130
131
173
153
162
137
148
165
163
139
165
172
144
141
137
142
145
146
SAME AS ABOVE
BASE ASS'Y. (REF.)
BP 1224-1

FRONT PLATE COMPONENTS

KEY	PART DESCRIPTION	PART NUMBER	QTY
1	CODE DISK ASSEMBLY	625A066X99	1
2	SET SCREW, Hex Hole, Cup Point: #8-32 x 3/16"	019K003S31	1
3	SHIM	377A144T12	1
5	PIN, Roll: 3/32 x l/2"	107A0llU0l	1
6	INPUT BRACKET ASSEMBLY-SEE PAGES 11 & 12	623A595U0l	1
7	SET SCREW, Hex Hole, Cup Point: #4-40 x l/4"	019F003S31	2
9	MOUNTING PLATE	355A176A50	1
10	BEARING	103C016U01	1
11	INPUT BRACKET ASSEMBLY-SEE PAGES 11&12	635A161X99	1
13	GEAR	422A261T30	1
14	SET SCREW,HEX HOLE, CUP POINT: #6-32 X 1/8"	019H002S31	1
15	GUIDE, LOCKING LEVER	355K027B60	1
16	SCREW, PAN HEAD: #10-32 X 5/16"	005L005T10	2
17	WASHER, LOCK: #10	085D010S31	2
18	*SPRING,TENSION	424B026S13	1
19	CAM SHAFT ASSEMBLY	635A136X99	1
21	BEARING BLOCK ASSEMBLY	634A118X99	2
23	BOLT, HEX HEAD: 1/4-20 X 1"	040B108T30	2
24	WASHER,Flat: 1/4"	085A416T10	1
25	WASHER,Lock: 1/4"	085D416S31	2
26	CAM, CODE DISK LOCKING	423A040U01	1
27	CAM, Punch Arm Actuating	423A042Q81	1
28	CAM, Eccentric: Paper Tape Advancement	423A030Q81	1
29	PULLEY, Take-Up Spool	413E0llQ81	1
31	PLATE, Scale	625A968U0l	1
32	WASHER, Lock: #l0	085D0l0S31	1
33	SCREW, Fillister Head: #10-32 x 3/4"	004L012Tl0	2
35	PUNCH ARM COMPONENTS-SEE PAGE 18	-	1
37	GUIDE, Tape	661B006U01	1
38	COVER, Switch	641B022U0l	1
41	CAM FOLLOWER	353C621Tl0	1
42	* SCREW, Fillister Head: #l0-32 x 3/8"	004L006Tl0	4
43	WASHER, Flat: #l0	085A010T30	2
44	WASHER, Lock: #10	085D0l0S31	4
45	*SPRING, Punch Arm	424A145U0l	1
46	SCREW, Flat Head: #6-32 x 2-l/2"	002H248Tl0	1
47	*NUT, Self Locking: #6-32	092H017U05	1
48	BEARING BLOCK ASSEMBLY	611A199X99	2
50	BOLT, Hex Head: l/4-20 x 1"	040B108Tl0	2
51	WASHER, Flat: l/4"	085A416Tl0	2
52	WASHER, Lock: l/4"	085D416S31	2
53	SHAFT, Punch Arm	370E033T30	2
54	TRAY, Chad	327C012K35	1
55	SPROCKET	422F006V60	1
56	RETAINER, Spring	323B086U0l	2
57	SPRING	424A104U0l	1
58	WASHER, Flat: Phenolic	377A122P22	2
59	WASHER, Flat: Teflon	377A147P30	2
60	PLATE, Retractor Support	355C098T12	1
61	PLATE, Retractor	355H257T12	1
62	SCREW, Fillister Head: #6-32 x 3/16"	004H003T10	3
63	WASHER, Flat: #6	085A006T10	3
64	WASHER, Lock: #6	085D006S31	3

* INDICATES RECOMMENDED SPARE PARTS

Note: Certain of the parts are pinned together after installation and alignment. The spare part furnished is not drilled for pinning.

FRONT PLATE COMPONENTS

KEY	PART DESCRIPTION	PART NUMBER	QTY
65	SCREW, Flat Head: #10-32 x 3/8"	002L006T10	2
66	STOP	377A142Q81	1
67	PAWL, Feed, Upper: Paper Tape Advancement	400D037T12	1
68	PAWL, Feed, Lower: Paper Tape Advancement	400D038U01	1
70	SCREW, Fillister Head: #4-40 x 1/4"	004F004T10	2
71	WASHER, Flat: #4	085A004T10	2
72	WASHER, Lock: #4	085D004S31	2
73	* SPRING, Tension	424B016U01	1
74	WASHER, Flat: #2	085A002T10	1
75	PIN, Cotter	107C001U01	1
76	WASHER, Flat	377A133U01	1
77	FASTENER, External	106A320U01	1
78	PUNCH MOTOR, Non-Telemetering-SEE PAGES 16 & 17	623B065U01	1
79	PUNCH MOTOR, Telemetering-SEE PAGES 16 & 17	623B065U02	1
80	WASHER, Flat: #10	085A010T10	4
81	WASHER, Lock: #10	085D010S31	2
82	SCREW, Pan Head: #10-32 x 1/2"	006L008T10	2
86	CAM, Motor Switch	423A121U01	1
88	POST	403B206A12	3
89	SCREW, Pan Head: #6-32 x 3/8"	006H006T10	6
90	WASHER, Lock: #6	085D006S31	6
91	BLOCK	406B151U01	1
93	SCREW, Fillister Head: #4-40 x 5/16"	004F005T10	2
94	WASHER, Lock: #4	085D004S31	2
96	POINTER	410C060A15	1
97	SCALE	335B043A11	1
98	SCREW, Pan Head: #4-40 x 1/8"	006F002T10	1/2
167	SET SCREW, Hex Hole, Cup Point: #4-40 x 3/16"	019F003S31	2
168	CLAMP, Cable: #4 (For Telemetering Models)	108A004U01	1
181	WASHER, Lock: #10	085D010S31	4
182	SCREW, Hex Head Shoulder: #10-32	396D026T30	2
183	NUT, Hex: #10-32	080L200T10	2
184	SCREW, Fillister Head: #10-32 x 5/8"	004L010T10	1
185	SCREW, Fillister Head: #10-32 x 1"	004L108T10	1
192	RING, Pulley Guide	376D042A12	2
193	SET SCREW, Fluted Hole, Cup Point: #2-56 x 3/16"	020D003S31	4
208	CAM ASSEMBLY AC TIMER: 5 Minute	660A112U01	1
209	CAM ASSEMBLY AC TIMER: 15 Minute	660A110U01	1
210	CAM ASSEMBLY AC TIMER: 30 Minute	660A113U01	1
211	CAM ASSEMBLY AC TIMER: 60 Minute	660A111U01	1
212	CAM ASSEMBLY AC TIMER: 6 Minute	660A114U01	1
213	CAM ASSEMBLY DC TIMER: 5 Minute	637A143U01	1
214	CAM ASSEMBLY DC TIMER: 15 Minute	423A109U01	1
215	CAM ASSEMBLY DC TIMER: 30 Minute	637A144U01	1
216	CAM ASSEMBLY DC TIMER: 60 Minute	423A110U01	1
217	CAM ASSEMBLY DC TIMER: 6 Minute	637A162U01	1
230	*TIMER ASSEMBLY, AC-SEE PAGE 13	665B016U02	1
231	*TIMER ASSEMBLY, DC-SEE PAGE 14	665B016U03	1
234	*PANEL, Timer: W/Electronic Timer-SEE PAGE 15	665B016U04	1
247	TAPE BRACKET ASSEMBLY△-SEE PAGES 16 & 17	623A525U01	1
248	TAPE BRACKET ASSEMBLY‡-SEE PAGES 16 & 17	623A599U01	1
249	*SPRING, Belt△	424B019T10	1
250	*SPRING, Belt‡	424B079T10	1

△15, 30 or 60 Minute Time Cycle
‡5 or 6 Minute Time Cycle

REF.: BM 35-1528

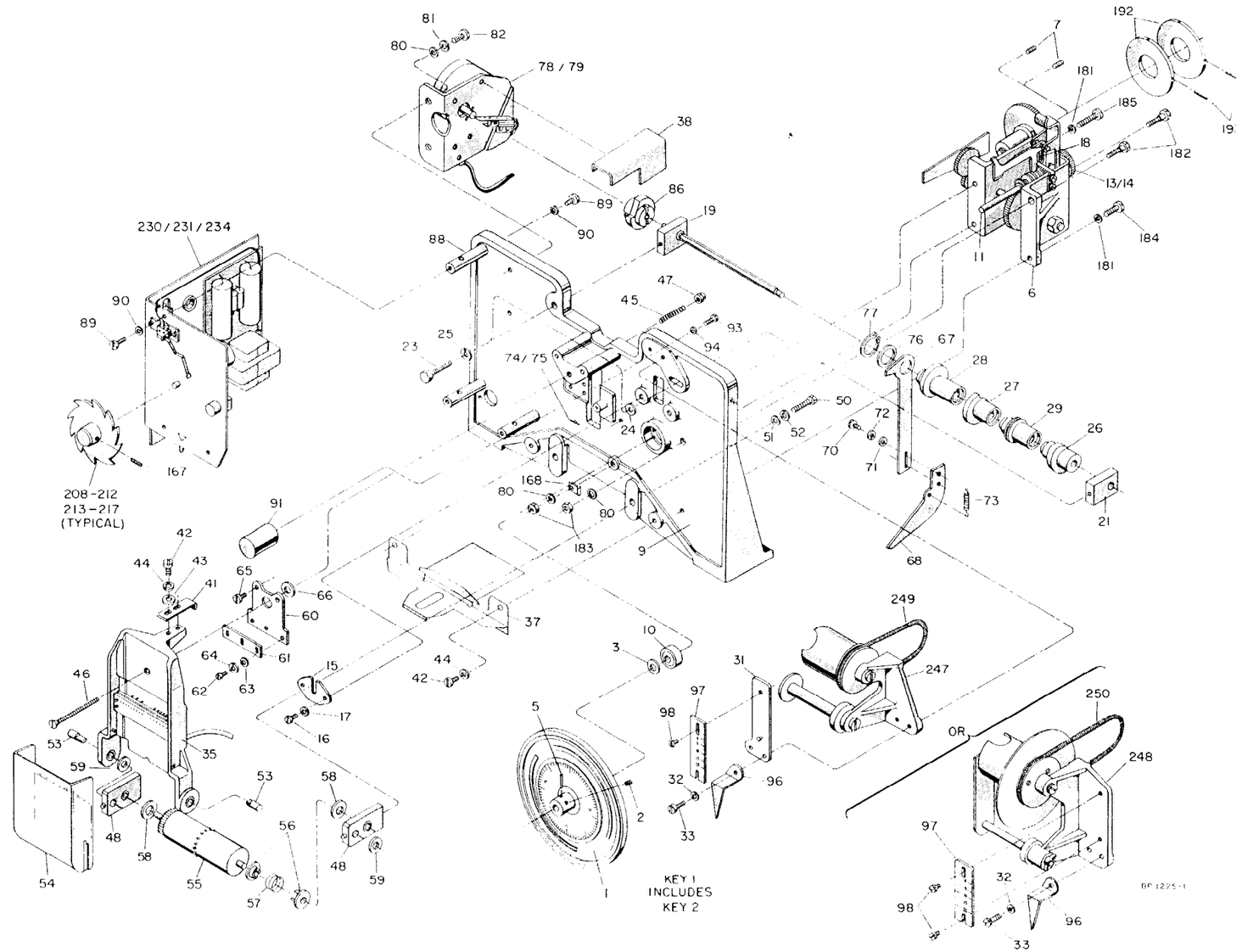

INPUT SHAFT ASSEMBLY
PART NUMBER: 635A161X99

KEY	PART DESCRIPTION	PART NUMBER	QUANTITY
1	COLLAR	371C017N31	1
2	SHAFT, Input	370E073T30	1
3	SPRING, Compression	424A222T10	1
4	RING FASTENER, External	106A111U01	1
5	GEAR, Worm	422G010B51	1
6	PIN, Groove: 1/16" Dia. x 3/8"	107B025U01	1
7	WASHER, Flat	377A144T12	1

* INDICATES RECOMMENDED SPARE PARTS REF.: 635A161

INPUT BRACKET ASSEMBLY
PART NUMBER: 623A595U01

KEY	PART DESCRIPTION	PART NUMBER	QUANTITY
1	BRACKET SUBASSEMBLY	623A315U01	1
2	WASHER, Flat	377A120N31	2
3	RING FASTENER, External	106A308U01	1
4	RING FASTENER, External	106A115U01	1
5	SHAFT, Transverse	370D127T30	1
6	PIN, Roll: 1/16" Dia. x 1/2"	107A004U01	2
7	SHAFT, Locking Lever	370D079T30	1
8	RING FASTENER, External	106D024U01	1
9	WASHER, Flat	377N015B10	1
10	LEVER ASSEMBLY, Locking	647A343X99	1
11	* SPRING, Torsion	424C024S13	1
12	ROCKER ARM	400C033T12	1
13	STOP, Locking Lever	353B266T12	1
14	SCREW, Fillister Head: #6-32 x 1/4"	004H004T10	2
15	PIN, Groove: 1/8" Dia. x 3/8"	107B031U01	2
16	WASHER, Lock: #6	085D006S31	2
17	NUT, Self-Locking: 1/4-20	093B005U03	1
18	* GEAR & SHAFT ASSEMBLY	659A392X99	1
19	RING FASTENER, External	106A109U01	1
20	ROLLER, Guide	371D071B11	1
21	SET SCREW, Hex Hole, Cup Point: #4-40 x 1/8"	019F002S31	1
22	WHEEL, Worm	422G021B51	1
23	SHAFT, Tape Guide	370E052T30	1
24	GEAR, Spur	422A237B11	1
25	GEAR & ARM ASSEMBLY	659A391X99	1
26	HUB & PLATE ASSEMBLY	637A139X99	1
27	SET SCREW, Hex Hole, Cup Point: #6-32 x 1/8"	019H002S31	2
28	* BEARING	103E036U01	2
29	COLLAR	371C042A12	1
30	SET SCREW, Fluted Hole, Cup Point: #2-56 x 1/8"	020D002S31	1
31	* BEARING	103C016U01	1
32	SCREW, Fillister Head: #6-32 x 3/8"	004H006T10	2
33	WASHER, Lock: #6	085D006S31	2

* INDICATES RECOMMENDED SPARE PARTS REF.: 623A595

SEE ILLUSTRATION ON PAGE 12

INPUT SHAFT ASSEMBLY

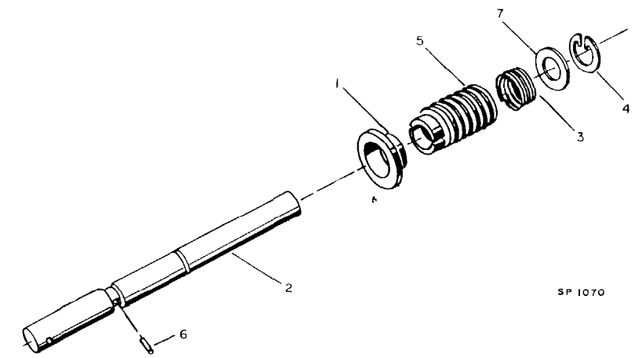

INPUT BRACKET ASSEMBLY

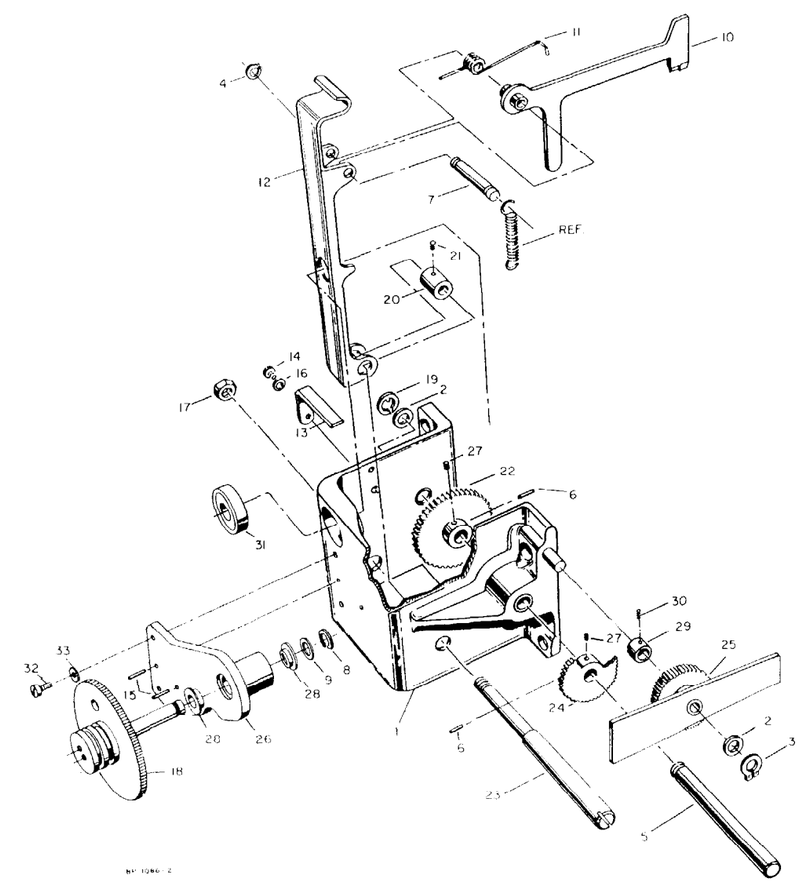

SEE PARTS LIST ON PAGE 11

PARTS LIST

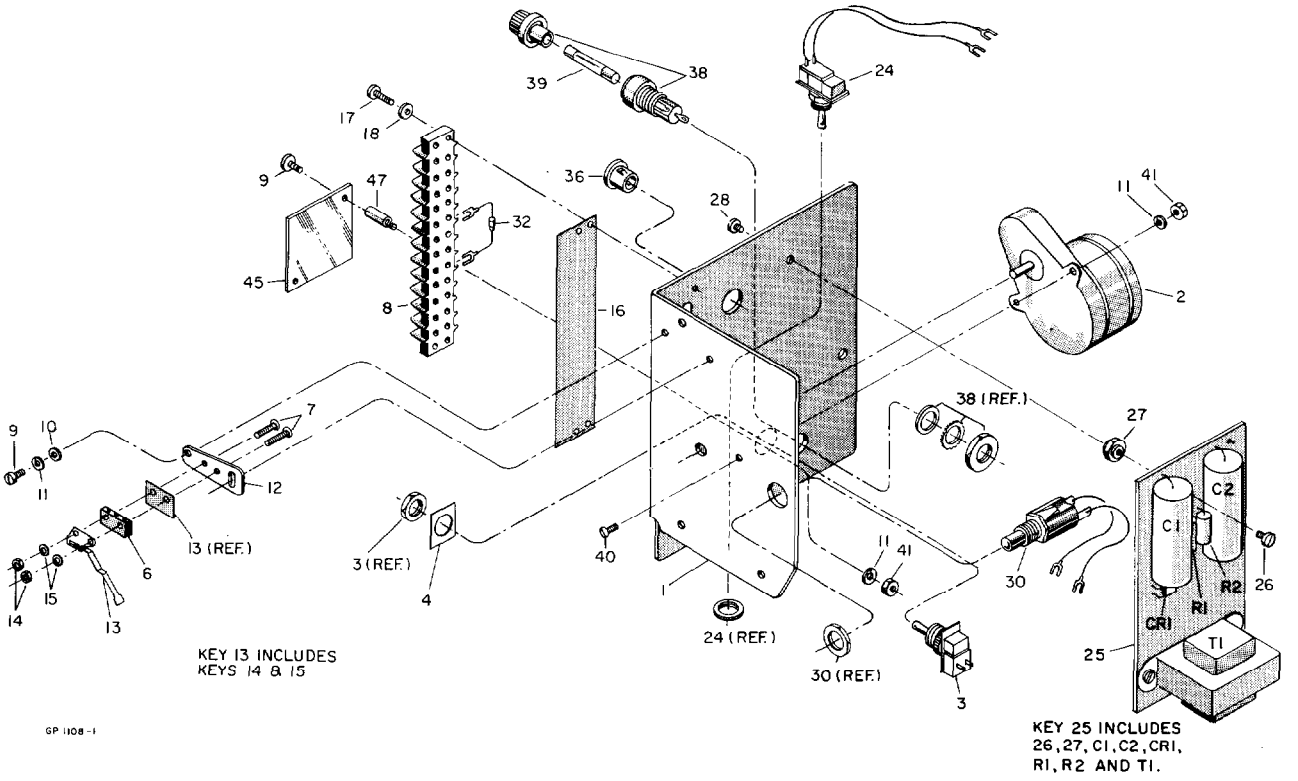

TIMER ASSEMBLY, AC

PART NUMBER : 665BOI6UO2

KEY	PART DESCRIPTION	PART NUMBER	QUANTITY
1	BRACKET	357B091U01	1
2	*MOTOR	165A177U01	1
3	*SWITCH, Toggle	154B016U01	1
4	PLATE, Switch	154B045U01	1
6	*Micro Switch	154E099U02	1
7	SCREW, Flat Head: #2-56 x l/2"	002D008Tl0	2
8	TERMINAL BOARD	171F012U01	1
9	SCREW. Fillister Head: #4-40 x l/4"	004F004T10	4
10	WASHER, Flat: #4	085A004Tl0	2
11	WASHER, External Tooth: #4 -	085H004S31	6
12	PLATE, Switch	355C365A15	1
13	*LEVER ARM & INSULATOR ASSEMBLY	647A325U01	1
14	NUT Hex:#2-56	080D202T10	2
15	WASHER Lock #2	085F002S31	2
16	MARKER STRIP	358D826U01	1
17	SCREW, Fillister Head: #6-32 x l/2"	004H008T10	2
18	WASHER, Lock: #6	085D006S31	2
24	*SWITCH, Toggle w/ Lead Wires	674B054U02	1
25	*PRINTED CIRCUIT CARD ASSEMBLY	685A537U01	1
26	SCREW, Truss Head: #4-40 x l/8"	005F002T30	3
27	NUT, Special	397D147B11	3
Cl,C2	CAPACITOR, Electrolytic: 2000 mfd, 15 vdc	160A024U01	2
CR1	DIODE: Full Wave Bridge, Type MDA920A-4	166E004U01	1
Rl,R2	RESISTOR, Composition: lΩ, 5% 2W	161P015U0	1
Tl	TRANSFORMER, Filament: 117 VAC/6.3 VCT @ 1.2 Amp.	164F008U10	1
28	SCREW, Pan Head: #4-40 x l/8"	006F002T10	3
30	*SWITCH, Pushbutton w/ Lead Wires	674B053U10	1
32	*DIODE ASSEMBLY	698B012U01	1
36	BUSHING	104C006U01	2
38	FUSE HOLDER	151F006U01	1
39	FUSE, 1 Amp.	151B007U10	1
40	SCREW, Pan Head: #4-40 x l/4"	006F004T10	2
41	NUT, Hex: # 4 -	40080F200T10	4
45	SHIELD, Terminal Strip	351A075P11	1
47	SPACER	403C125A14	2

* INDICATES RECOMMENDED SPARE PARTS

REF.: 665B016

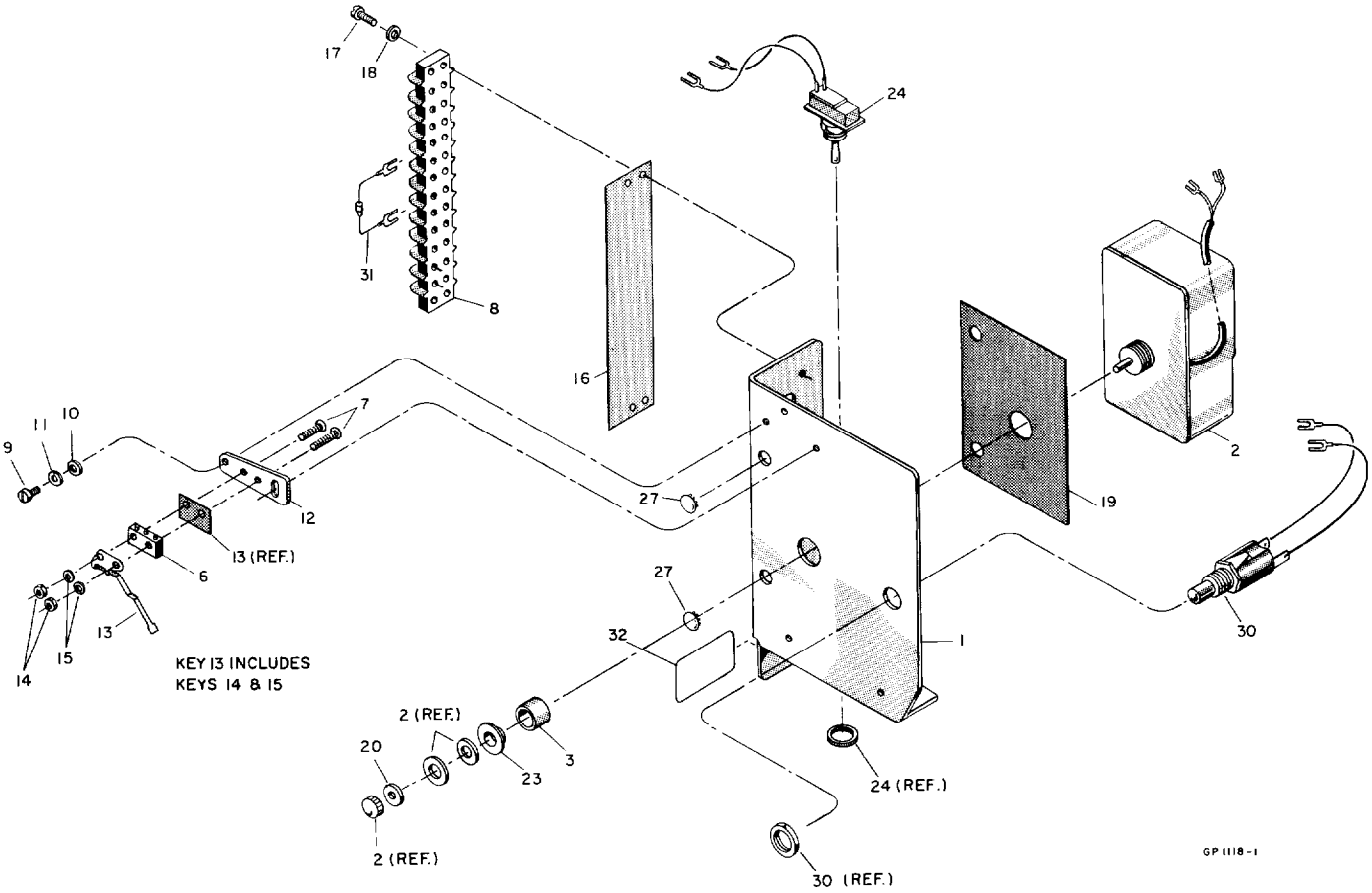

TIMER ASSEMBLY, DC

PART NUMBER: 665B016U03

KEY	PART DESCRIPTION	PART NUMBER	QUANTITY
1	BRACKET	357B092U01	1
2	*TIMER	133E022U01	1
3	BUSHING, Shaft	368A022B11	1
6	*Micro Switch	154E099U02	1
7	SCREW, Flat Head: #2-56 x l/2"	002D008T10	2
8	TERMINAL BOARD	171F012U01	1
9	SCREW, Fillister Head: #4-40 x l/4"	004F004T10	2
10	WASHER, Flat: #4	085A004T10	2
11	WASHER, External Tooth: #4	085H004531	2
12	PLATE, Switch	355C365A15	1
13	*LEVER ARM & INSULATOR ASSEMBLY	647A325U01	1
14	NUT, HEX: #2-56	080D202T10	2
15	WASHER, LOCK: #2	085F002S31	2
16	MARKER STRIP	358D826U01	1
17	SCREW, Fillister Head: #6-32 x 1/2	004H008T10	2
18	WASHER, Lock: # 6	085D006S31	2
19	INSULATOR	358C203P91	1
20	WASHER	377A188R60	1
23	BUSHING	368G096083	1
24	*SWITCH, Toggle w/ Lead Wires	674B054U02	1
27	PLUG, Pop	144A031U01	2
30	*SWITCH, Pushbutton w/ Lead Wires	674B053U01	1
31	*DIODE ASSEMBLY	698B012U01	1
32	TAG, Warning	338D167U01	1

* INDICATES RECOMMENDED SPARE PARTS

REF.: 665B016

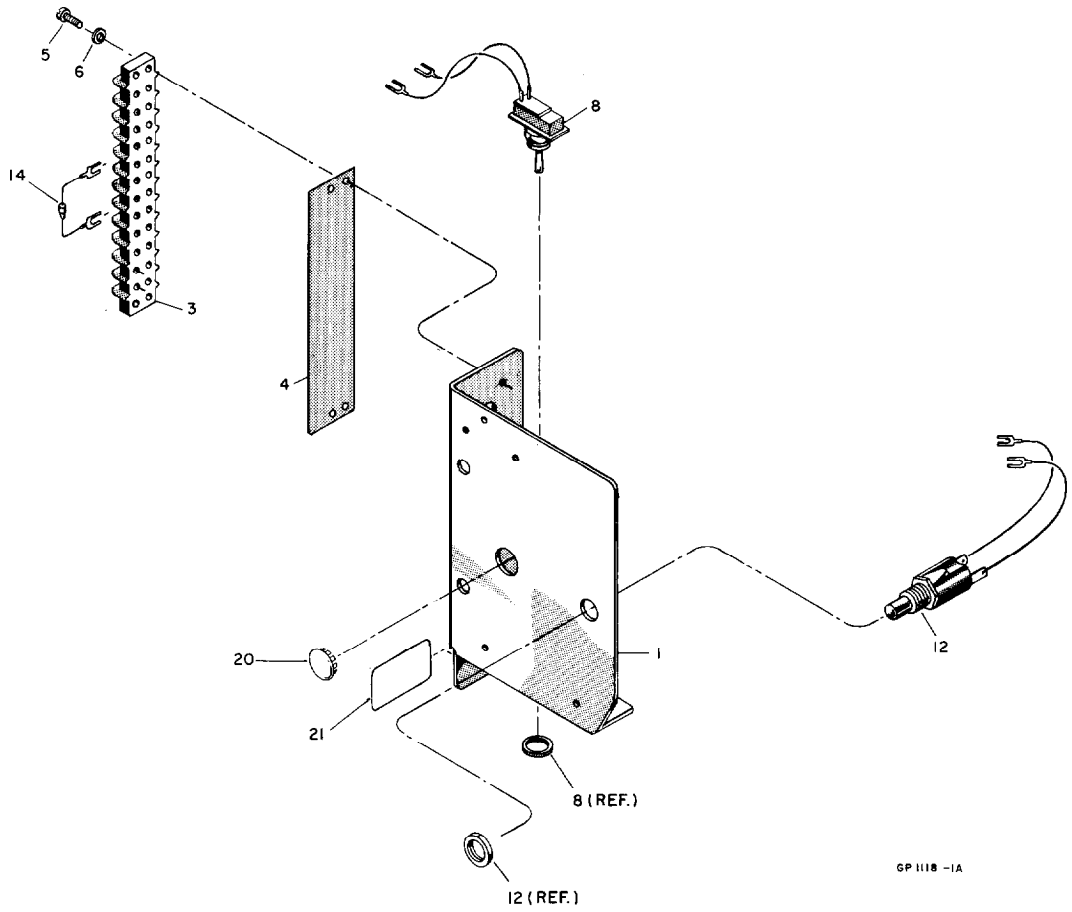

TIMER PANEL ASSEMBLY

PART NUMBER : 6658016U04

KEY	PART DESCRIPTION	PART NUMBER	QUANTITY
1	BRACKET	357B092U01	1
3	TERMINAL BOARD	171F012U0l	1
4	MARKER STRIP	358D826U0l	1
5	SCREW, Fillister Head: #6-32 x l/2"	004H008T10	2
6	WASHER, Lock: #6	085D006S31	2
8	*SWITCH, Toggle w/ Lead Wires	674B054U02	1
12	*SWITCH, Pushbutton w/ Lead Wires	674B053U0l	1
14	*DIODE ASSEMBLY	698B012U01	1
20	PLUG, Snap	114A005U01	1
21	TAG, Warning	338D167U01	1

* INDICATES RECOMMENDED SPARE PARTS

REF.: 665B016

TAPEBRACKETASSEMBLY(I5,30or60MinuteTimeCycle)

PART NUMBER : 623A525UOl

K E Y	PART DESCRIPTION	PART NUMBER	QUANTITY
1	BRACKET	353B721A50	1
2	WASHER, External Tooth: l/4"	085H416S31	1
6	SPOOL, Take-Up	413C275P20	1
8	SHAFT, Spool	370E028T30	1
9	RING FASTENER, External	106D014U01	1
10	SCREW, Pan Head: #10-32 x 5/8"	006LO10T30	1
11	SCREW, Truss Head: l/4-20 x 5/8"	035B010T30	1
12	GUIDE, Tape	402E043T30	1
13	WASHER, Fiat	377A251T12	1
14	SPACER	371B152Q81	1
15	SCREW, Pan Head: #10-32 x l/4"	006L004T30	1
16	WASHER, Lock: #10	085HO1OS31	2

* INDICATES RECOMMENDED SPARE PARTS REF.: 623A525

TAPE BRACKET ASSEMBLY (5 or 6 Minute Time Cycle)

PART NUMBER : 623A599UO1

KEY	PART DESCRIPTION	PART NUMBER	QUANTITY
1	BRACKET	353B863A18	1
2	SPOOL, Take-Up	413C267P20	1
3	SHAFT	370E084T30	1
4	SPOOL GUIDE BAR ASSEMBLY	650A117UO1	1
5	DISK, Spool	374A097A15	1
6	SPACER	376L171Q81	1
7	RING FASTENER, External	106D014U01	1
8	NUT, Wing: #10-32	080L400T10	1
9	SCREW, Pan Head: #10-32 x 5/8"	006L01T30	1
10	WASHER, External Tooth: #10	085H01OS31	1
11	SCREW, Flat Head: #4-40 x 3/8"	002F006T10	2

* INDICATES RECOMMENDED SPARE PARTS REF.: 623A599

PUNCH MOTOR ASSEMBLY

NON-TELEMETERING MODEL PART NUMBER : 623BO65UO2
TELEMETERING MODEL PART NUMBER : 6238065UO2

KEY	PART DESCRIPTION	PART NUMBER	QUANTITY
1	BAR NUT: #4-40	397C035T12	1
2	WASHER, Lock: #4	085D004531	2
3	BAR WASHER	377A196T12	1
4	SCREW, Pan Head: #4-40 x 5/16"	006F005T10	2
5	BRACKET	353A267A50	1
6	"GEARMOTOR	165K002U01	1
10	*SWITCH ASSEMBLY, Non-Telemetering	674A193U01	1
11	*SWITCH ASSEMBLY, Telemetering	674A193U02	1
12	SCREW, Pan Head: #6-32 x l/4"	006H004T10	1
13	WASHER, Flat: #6	085A006T10	1
14	CLAMP, Cable: Size #4	108A004U01	1
15	SCREW, Pan Head: #6-32 x 3/16"	006H003T10	2
16	WASHER, Lock: #6	085D006S31	2

* INDICATES RECOMMENDED SPARE PARTS REF.: 623B065

TAPE BRACKET ASSEMBLY (15,30 or 60 Minute Time Cycle)

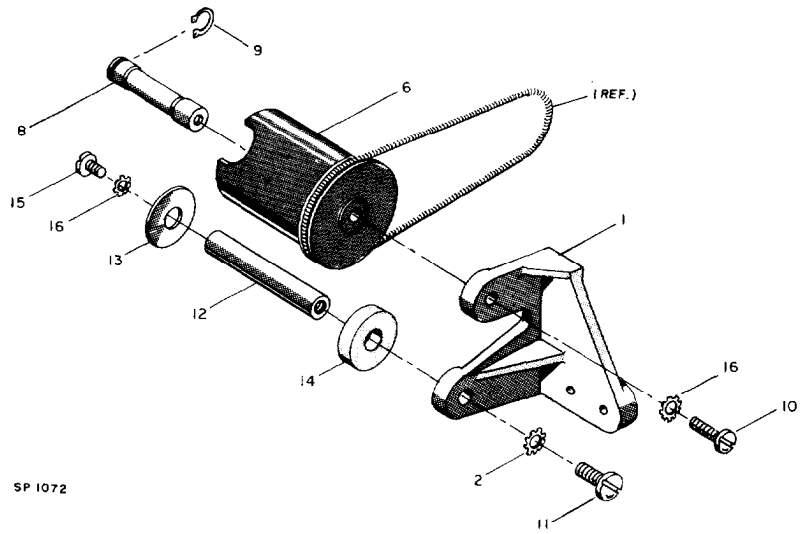

TAPE BRACKET ASSEMBLY (5 or 6 Minute Time Cycle)

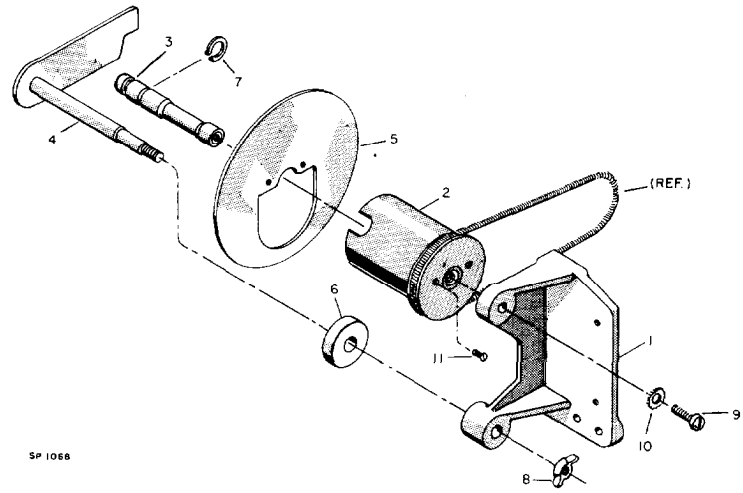

PUNCH MOTOR ASSEMBLY

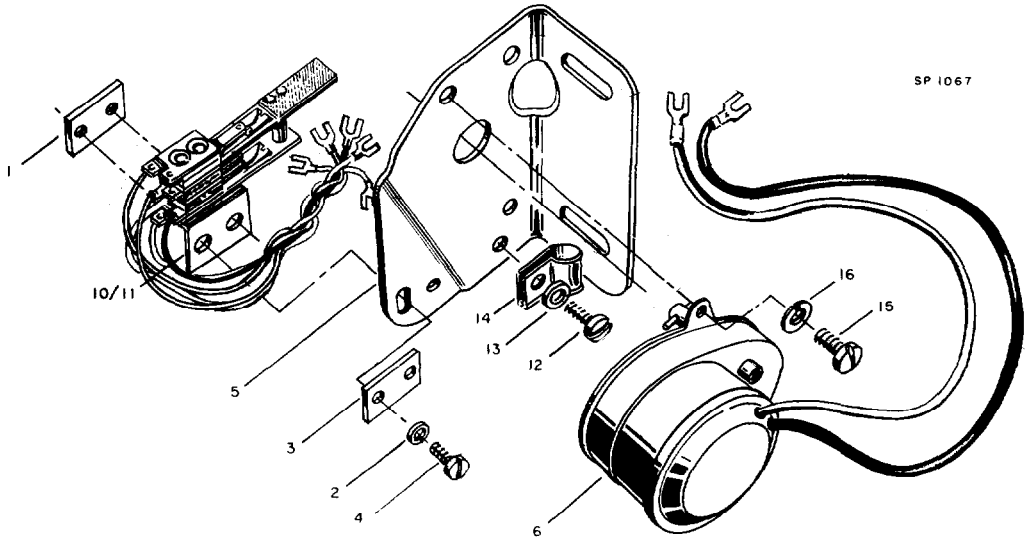

PARTS LIST

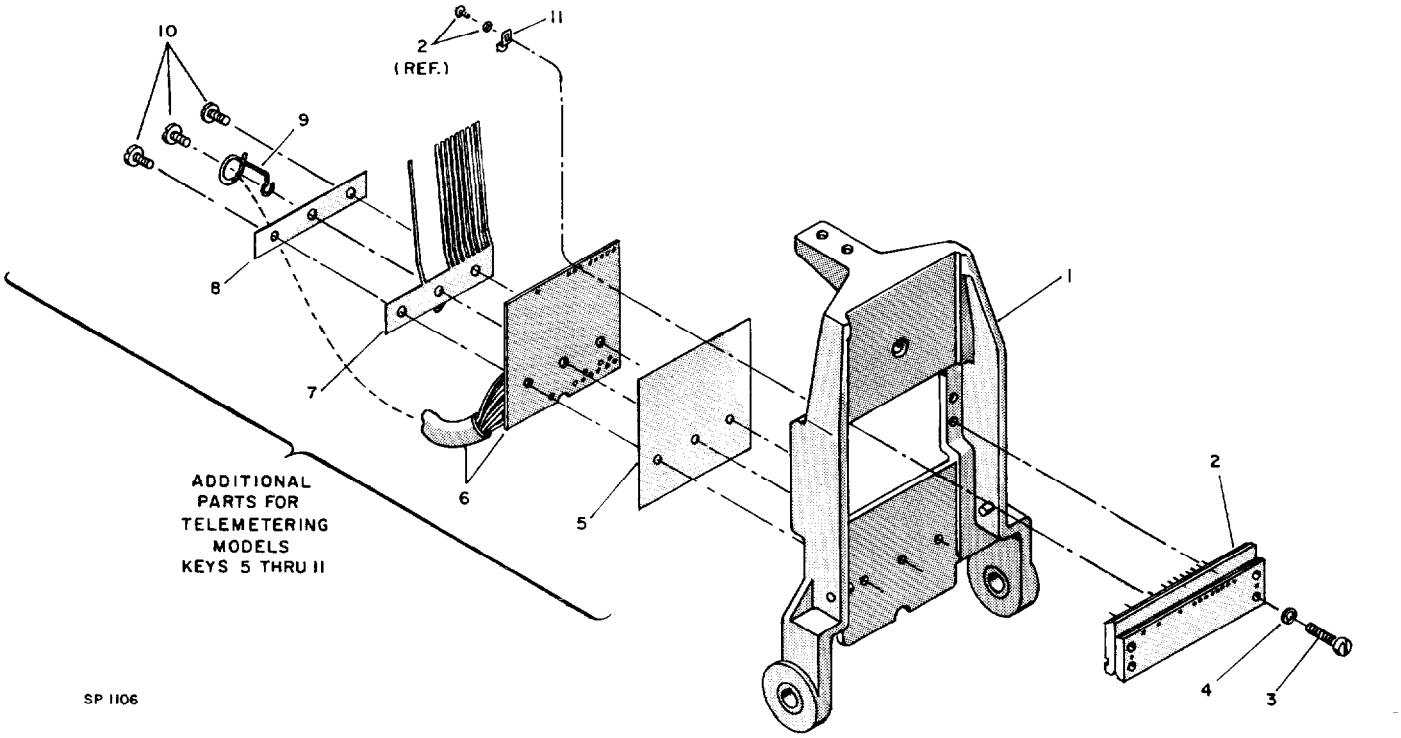

PUNCH ARM COMPONENTS

KEY	PART DESCRIPTION		PART NUMBER	QUANTITY
1	PUNCH ARM SUBASEMBLY		642A112U01	1
2	*PUNCH HOLDER & DIE ASSEMBLY		625A401U01	1
3	SCREW, Fillister Head: #6-32 x 9/16		004H009T10	4
4	WASHER, Lock: #6		085D006S31	4
5	INSULATOR	Telemetering Models	358C135P91	1
6	*PRINTED CIRCUIT & CABLE	Telemetering Models	685B296U01	1
7	*CONTACT ARM	Telemetering Models	399B058B60	1
8	PLATE, Contact Arm Retainer	Telemetering Models	355H530T12	1
9	SUPPORT, Cable	Telemetering Models	424D010T10	1
10	SCREW, Pan Head: #2-56 x l/4"	Telemetering Models	006D004T10	3
11	CLAMP, Circuit Board	Telemetering Models	391D068T12	1

* INDICATES RECOMMENDED SPARE PARTS

REF.: BM 35-1528

FISCHER & PORTER CO.
WARMINSTER, PENNSYLVANIA, U.S.A.

Pub. No. 18976

MANUAL INDEX - PRECIPITATION GAGES

Number	Title
10-204	Instruction Bulletin for Series 1558-1559 Precipitation Gage Recorder Design Sequence A2 (Fischer & Porter 1B35-1558-1)
10-206	Maintenance Bulletin for Series 35-1548, 35-1558, and 35-1559 Precipitation Gage Recorder (Fischer & Porter 1B35-9009)
10-207	Instruction Bulletin for Series 35B1558 and 35B1559 Precipitation Gage-Recorder Design Level "A" and "B"
10-208	Parts List for Series 35B1558 and 35B1559 Precipitation Gage-Recorder (Design Level "B")
delete ~~10-209~~	Instruction Bulletin for Fischer & Porter Solid State Timers - IB (P) 35-9010

Items 10-200 through 10-203, and 10-205 have been deleted.

MANUAL INDEX - TIDE GAGES

Number	Title
10-304	Instruction Bulletin for Models 1550 and 1551 Punched Tape Level Recorder (Fischer & Porter)
10-307	Operating and Service Manual for 540A-1 Multiple Access Data Acquisition System Automatic Remote Collector (Telephone System)

Items 10-300 through 10-303, 10-305, and 10-306 have been deleted.

All special instrumentation maintenance schedules have been deleted.

MANUAL INDEX - ARC SYSTEM

10-500	Operating and Service Manual for 540A-1 Multiple Access Data Acquisition System Automatic Remote Collector (ARC)

MANUAL INDEX - ARC SYSTEM

10-600	Operating and Service Manual for 550A-1 Hydrologger - Limited Automatic Remote Collector (LARC) System

PART 2 HYDROLOGIC EQUIPMENT (EHB-10)

2. Equipment Maintenance Notes. Maintenance notes serve to establish day-to-day procedures regarding maintenance activities carried out by electronics technicians, and to augment technical material presented in equipment manuals. They function as a communications device to assist technicians in following the correct procedures established in calibrating and maintaining electronic and electromechanical systems. Maintenance notes provide information generally not found in other sources and are basically the means by which technicians are kept informed of changes relating to specific equipment and systems for which they have maintenance responsibility. They are issued only by the NWS Office of Systems Operations Engineering Division, the sole authorized organization for establishing maintenance policy, and are distributed to all electronics technicians and on a selective basis to other predesignated organizational units having a requirement for the information.

Revisions to existing material are made to enhance maintenance effectiveness and to update obsolete technical information. Input for maintenance notes is derived from operational experience obtained through various reporting channels, suggestions from field technicians who are maintaining a particular class of instruments, and through the experience of highly technical specialists and engineers engaged in managing the maintenance program at the regional and NWS Headquarters level. In essence, maintenance notes are developed from numerous inputs throughout the organization and constitute an important supplement to other technical documents.

Notes are issued by equipment types for ease of reference, and are consecutively numbered by date of issue. The area electronics supervisor will periodically check that each electronics technician has available all current notes. Missing material should be requested from the National Logistics Supply Center (NLSC).

MAINTENANCE NOTE INDEX - HYDROLOGIC GAGING

Number	Date of Issue	Title
6	April 1, 1964	Fischer & Porter Analog-Digital Recorder/ Binary Decimal Transmitter External Timer Connections
8	January 5, 1965	Maintenance Note Title Change
9	January 5, 1965	Replacement for Soltron CER-69 and CER-70 Diodes in Fischer & Porter ADR's and BDT's
29	January 20, 1969	Fischer & Porter ADR and Precipitation Recorder Telemetering Circuit Boards
32	May 28, 1969	Instructions for Field Conversion of Wire Weight River Gages for use with Transistorized Indicator Units
33	June 20, 1969	Maintenance Bulletin for Fischer & Porter Precipitation Recorders
37	March 2, 1970	Fischer & Porter Precipitation Gage Repair Modules

Items 1-5, 7, 10-28, 30, 31, and 34-36 have been deleted.

MAINTENANCE NOTE INDEX - HYDROLOGIC GAGING

Number	Date of Issue	Title
42	September 14, 1971	Fischer & Porter Model 1548 Precipitation Gage Updating
43	September 14, 1971	Prevention of Flexure Damage in the Fischer & Porter Precipitation Gage
45	February 7, 1972	A New Fischer & Porter Punch
47	February 7, 1972	Lubrication of Precipitation and River Gage Cam Surfaces
48	February 7, 1972	Precipitation Gage Tape Feed Problems
49	February 7, 1972	Comments on the New Fischer & Porter Precipitation Gages
50	June 29, 1972	Fischer & Porter Spare Kits in NLSC Stock
51	June 29, 1972	Standard Procedure for Removing and Rethreading the tape on the Fischer & Porter Precipitation Gage
52	June 29, 1972	Glycerin as a Gasket Lubricant
53	June 29, 1972	Universal Rain Gage Replacement Parts
54	December 14, 1972	Punch Pressure Measurement of Fischer & Porter Precipitation and River Gages

Items 38-41, 44, and 46 have been deleted.

MAINTENANCE NOTE INDEX - HYDROLOGIC GAGING

Number	Date of Issue	Title
55	November 6, 1973	Defective Fischer & Porter Punched Tape
63	May 23, 1978	Tools for Clearing Jammed Tape on Fischer and Porter Gages
67	August 24, 1982	Instructions for Installation of Solid State Timer Model III
	May 19, 1994	Errata sheet 1 Replacement Wiring Diagram for, Maintenance Note 67
68	April 3, 1989	Weighing Rain Gauge Hood to Lower Case Assembly Compatibility
69	November 9, 1989	Elimination of the Telemark (TMK) and Binary-Decimal Transmitter (BDT)
70	March 12, 1990	Calibration Procedure,for the 12 inch Tipping Bucket Rain Gauge
	February 27, 1992	Errata Sheet 1 Pen and-Ink Change to Maintenance Note 70 Dated February 12, 1992
71	February 12, 1992	Power Requirement for Precipitation Gauge

Items 56-62, and 64-66 have been deleted.

UNITED STATES DEPARTMENT OF COMMERCE
WEATHER BUREAU
WASHINGTON

April 1, 1964

Instrumental Engineering Division O-3.4

RIVER GAGING SYSTEMS MAINTENANCE NOTES
(For Electronic Technicians)

6. Fischer & Porter Analog-Digital-Recorder/Binary Decimal Transmitter External Timer Connections

The U. S. Geological Survey has selected the Fischer & Porter Analog-Digital-Recorder without telemetering capability as their standard river gage throughout the United States. These gages differ from those used by the Weather Bureau in that an external clock is used for their timing unit. At present, in conjunction with the cooperative program between the USGS and WB, the WB is Installing a limited number of telemetering harnesses on USGS ADR's. When this harness is installed, the ADR is identical with the WB unit except there is no internal clock. Ordinarily, these will be installed by USGS technicians. On occasion, the WB will make the installation using one of the WB units and some of the Series 1542DD10 Punched Tape Recorder and Series 50DB1014 Binary-Decimal Transmitter combinations. These will then require circuit modifications. In these instances, one of the USGS external clocks may be connected to a WB ADR, in which case the instructions indicated below will apply. Should an external timer and battery supply be furnished for installation, the present F&P internal timer must be disconnected and the wiring on terminal board TB-2 altered as follows:

1. Remove the following five (5) leads from the F&P Timer Unit that are connected to terminal board, TB-2:

   (a) white timer motor lead from the mounting screw
   (b) red timer motor lead from terminal 1
   (c) red timer switch lead from terminal 1
   (d) yellow timer switch lead from terminal 4
   (e) blue timer switch lead from terminal 5

2 **Remove the complete timer assembly.**

3. **Remove the external battery harness from the recorder and fabricate** a new battery-timer harness as shown in Figure 1. When this change is performed the existing plug assembly should be utilized and a suitable length of Alpha No. 1898, 3 conductor, AWG-18 cable used in place of the present two conductor cable provided with the recorder.

4. Connect the new harness to the input receptacle Pl.

5. Connect a jumper wire from terminal 1 to terminal 5 of terminal board TB-2. Tighten all terminal screws.

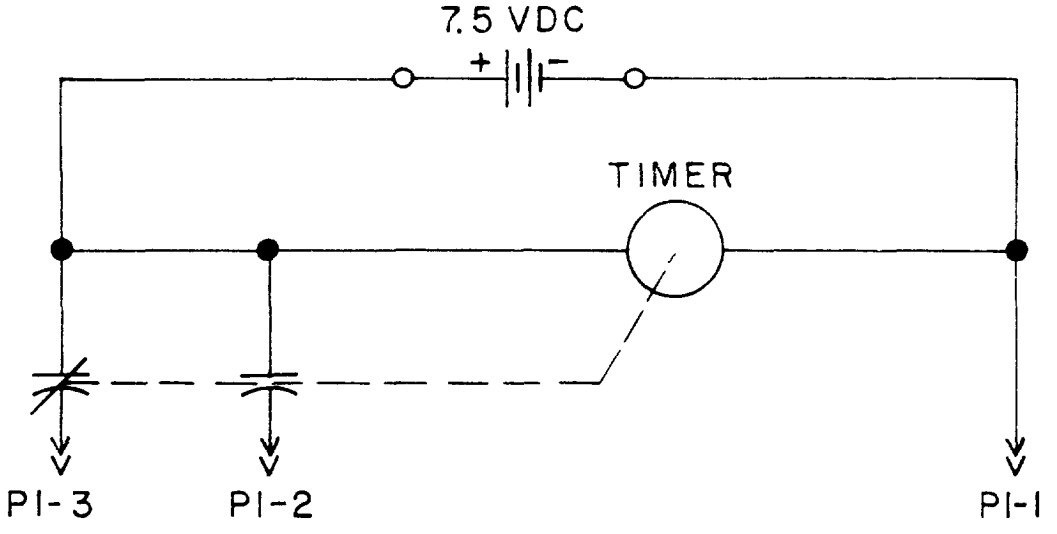

Fig.I:-Battery-Timer Harness,

The telemetering recorder-transmitter combination can be operated with one or two batteries. Two batteries in parallel are recommended for extended life. For this arrangement the following connections should be made:

1. Remove the jumper wire between terminals 5 and 6 of terminal board TB-3 on the Binary-Decimal Transmitter.

2. Connect the second battery to the Binary-Decimal Transmitter terminal board TB-3; the negative lead to terminal 7, *the* positive lead to terminal 6.

In order to operate the external timer arrangement with a single battery the following connections should be made:

1. Remove the jumper wire between terminals 5 and 6 of terminal board TB-3 on the Binary-Decimal Transmitter.

2. Connect a separate wire lead between terminal 6 of TB-3 on the Transmitter to the positive terminal of the battery used in the battery-timer harness.

A notation should be made on the maintenance log in the event it becomes necessary to make this change.

H.R. McBirney

H.R. McBirney, Acting Chief
Instrumental Engineering Division

cc:
RAO's
AHE'S

USCOMM-WB-DC

UNITED STATES DEPARTMENT OF COMMERCE
WEATHER BUREAU
WASHINGTON

January 5, 1965

Facilities & Maintenance Division A-7.41

HYDROLOGIC GAGING SYSTEMS MAINTENANCE NOTES
(For Electronic Technicians)

8. Maintenance Note Title Change

Commencing with this issuance, the title, "River Gaging Systems Maintenance Notes", will be changed to "Hydrologic Gaging Systems Maintenance Notes". This has resulted from the numerous systems involved in the measurement and recording of hydrometeorological data and the many similarities encountered in specific equipments. Under the previous heading, only equipment concerned with the measurement of river stage was covered. Use of the new heading will allow for expansion and will now include precipitation measurement equipment. The close similarity of recording and transmitting equipment (Fischer & Porter ADR's & BDT's in measuring these two parameters should result in a more orderly dissemination of technical instructions and allow Eltec's to consolidate related material more readily.

9. Replacement for Soltron CER-69 and CER-70 Diodes in Fischer & Porter ADR's and BDS's

Failure of the Soltron CER-69 or CER-70 diode, identified as CR-l and CR-2 in the Fischer &Porter Analog-Digital Recorder (ADR) and Precipitation Gage Recorder, has resulted in sane difficulty at field installations in obtaining a direct replacement. In those instances where failure occurs, it is recommended that the CER type diode be replaced with a 1N2071 silicon diode. Use of the 1N2O71 will afford a larger safety margin since the peak inverse voltage is 600 volts with a forward current rating of 750 ma. The CER-69 has a peak inverse voltage of only 75 volts and a 40-ma forward current rating.

In the series 5ODB1O14 Binary-Decimal Transmitter (BDT), the company used a CER-70 in lieu of the CER-69 diode. When replacement becomes necessary in this series BDT, it is also recommended that the 1N207l be employed. This diode is available from Weather Bureau stock and should be requested by stores requisition from the Regional Offices as required.

deleted 10. Failure of Mode CR-l in ADR and Precipitation Gage-Recorder

In those instances where a failure of diode CR-1 occurs in either an ADR or Precipitation Gage-Recorder having a DC timer, a check should be made prior to replacement to insure that the pin on the back of the timer is not protruding beyond its case. It has been found on occasion that this pin has punctured the thin mylar insulation sheet between the timer motor and the

recorder chassis, thus, shorting out CR-l. If this condition is encountered, the timer pin should be filed flat with the timer case. A new mylar insulation sheet can be obtained upon submission of a stores requisition to the Central Office. The request should be indicated in the following manner:

N.S.I., F&P Part No. 358C158, Key No. 19, Page 10 of Precipitation Gage-Recorder.

H. R. McBirney, Acting Manager

cc:
RO's
AES'S

U.S. DEPARTMENT OF COMMERCE
ENVIRONMENTAL SCIENCE SERVICES ADMINISTRATION
WEATHER BUREAU
SILVER SPRING, MD. 20910

January 20, 1969

IN REPLY REFER TO: W514

TO : All Regional Headquarters, Area Electronic Supervisors, Electronics Technicians and Field Aides (HC)

FROM : Director, Executive and Technical Services

SUBJECT: Transmittal Memorandum for Engineering Handbook No. 10, Issuance 69-2

1. Material Transmitted:

Engineering Handbook No. 10 - Hydrologic Equipment, Section 2.1; Maintenance Note No. 29, Fischer & Porter ADR and Precipitation Recorder Telemetering Circuit Boards.

2. Summary:

Maintenance Note No. 29 provides information on recent changes in size and configuration of Fischer & Porter telemetering printed circuit boards and recommends use of a recently stocked clamp for securing the new boards.

3. Effect on Other Instructions:

None.

R. C. Grubb

U.S. DEPARTMENT OF COMMERCE
ENVIRONMENTAL SCIENCE SERVICES ADMINISTRATION
WEATHER BUREAU
SILVER SPRING, MD. 20910

January 20, 1969

IN REPLY REFER TO:

Engineering Division

W514

HYDROLOGIC GAGING SYSTEM MAINTENANCE NOTES
(For Electronics Technicians & Field Aides (HC))

29. Fischer & Porter ADR and Precipitation Recorder Telemetering Circuit Boards

Recently the Fischer & Porter Company introduced variations in the size and configuration of the telemetering printed circuit boardsused with the telemetering fingers in their ADR's and rain gages. As a result considerable confusion exists among field personnel as to whether the correct part was received when ordered from the CLSC warehouse.

The printed circuit card for the ADR is stocked as D550-A108, Printed Circuit Assembly, Fischer & Porter part No. 685A347.

The printed circuit card for the PTG orprecipitationgage isstocked as D111 -A161, Printed Circuit Assembly, Fischer & Porter part No. 685A325.

The latest versionsof both cards are identical in size, 2-1/8 inches square. The ADR card (D550-A108) has 16 contacts wired into a 12-inch long cable while the rain gage card (D111-A161) has 9 contacts wired into a cable 24 inches long. Each cable contains a white lead not wired to the card.

The new circuit cards have no mounting holes at the top, Previous models had one, two or three upper mounting holes in addition to the three lower mounting holes. In order to secure the new circuit cards at the top, it is necessary to employ a circuit board clamp, Fischer & Porter part No. 391DO68. This clamp is shown in the figure attached to this maintenance note and is stocked at the CLSC warehouse as follows:

(1) For ADR Recorders

D550-SP104 - Clamp, circuit board, Fischer & Porter part No. 391DO68T12

(2) For Precipitation Gages

D111-SP163 - Clamp, circuit board, Fischer & Porter part No. 391D068T12
(When ordering use Stock No. D550-SP104)

It is suggested that when a replacement printed circuit board is ordered the clamp be ordered at the same time. If the board received is of the older type with one or more top mounting holes the clamp will not be needed. It is wise, however, to have it on hand if needed. The mounting screw and lockwasher used with the clamp should be on hand as it is part of the gage punch assembly.

U.S. DEPARTMENT OF COMMERCE
ENVIRONMENTAL SCIENCE SERVICES ADMINISTRATION
WEATHER BUREAU
SILVER SPRING, MD. 20910

May 28, 1969

IN REPLY REFER TO: W 5 1 4

TO : All Regional Headquarters, Area Electronic Supervisors, Electronics Technicians and Field Aides (HC)

FROM : Director, Executive and Technical Services

SUBJECT: Transmittal Memorandum for Engineering Handbook No. 10, Issuance 69-7

1. Material Transmitted:

Engineering Handbook No. 10 - Hydrologic Equipment, Section 2.1; Maintenance Note No. 32, Instructions for Field Conversion of Wire Weight River Gages for use with Transistorized Indicator Units.

2. Summary:

Maintenance Note No. 32 provides revised instructions for installing a transistorized indicator unit on the D501 Wire Weight River Gage.

3. Effect on Other Instructions:

This maintenance note supersedes similar instructions attached to O-3.4 Memorandum to All Electronics Technicians, November 17, 1960, Subject: Wire Weight River Gage Maintenance Information.

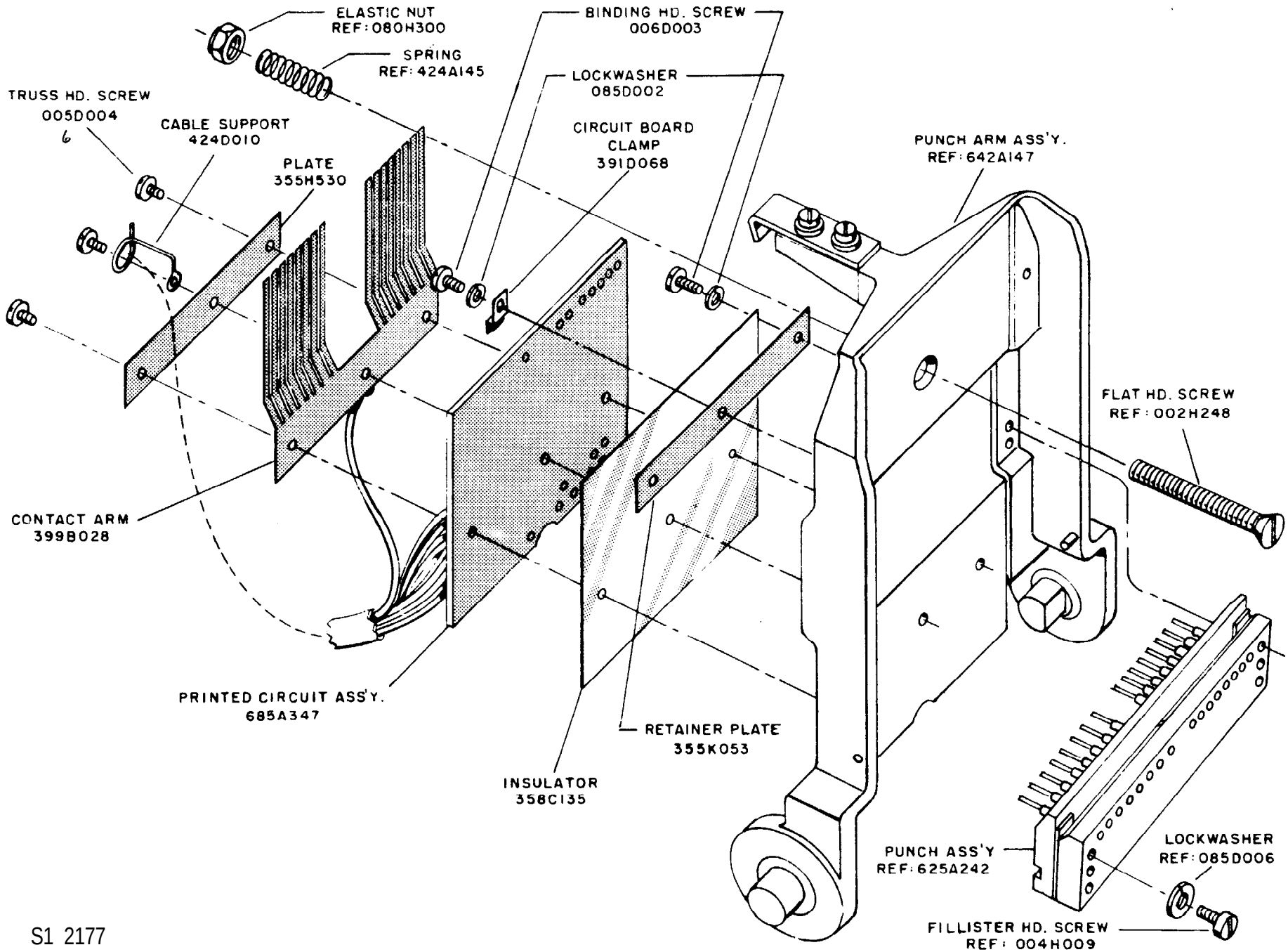
ELASTIC NUT
REF: 080H300
SPRING
REF: 424A145
BINDING HD. SCREW
006D003
LOCKWASHER
085D002
TRUSS HD. SCREW
005D004
CABLE SUPPORT
424D010
PLATE
355H530
CIRCUIT BOARD
CLAMP
391D068
PUNCH ARM ASS'Y.
REF: 642A147
FLAT HD. SCREW
REF: 002H248
CONTACT ARM
399B028
PRINTED CIRCUIT ASS'Y.
685A347
RETAINER PLATE
355K053
INSULATOR
358C135
PUNCH ASS'Y
REF: 625A242
LOCKWASHER
REF: 085D006
FILLISTER HD. SCREW
REF: 004H009

S1 2177

U.S. DEPARTMENT OF COMMERCE
ENVIRONMENTAL SCIENCE SERVICES ADMINISTRATION
WEATHER BUREAU
SILVER SPRING, MD. 20910

May 28, 1969

IN REPLY REFER TO:

Engineering Division W514

HYDROLOGIC GAGING SYSTEM MAINTENANCE NOTES
(For Electronics Technicians & Field Aides (HC))

32. Instructions for Field Conversion of Wire Weight River Gages for use with Transistorized Indicator Units

The instructions attached to this maintenance note are rewritten from the original instructions of May 16, 1960, forwarded to Weather Bureau Electronics Technicians under O-3.4 Memorandum, dated November 17, 1960.

There are numerous wire weight gages in use throughout the Weather Bureau and many of these have been modified for transistorized indicator use. Slight changes have been made in the conversion kit to provideupdating, but essentially the present kit is the same as the original.

The conversion instructions have been rewritten as an attachment to this maintenance note to cover the changes. The original instructions and memorandum to all Electronics Technicians, dated November 17, 1960, are superseded by this note.

A problem which occasionally appeared in the original conversions involved completionof the positive voltage path from the battery to the surface of the river. The circuit path in these installations is from the battery positive terminal to a terminal point in theamplifier, then to the gage cover via a green lead connected to the microswitch mounting screw, through the cover hinges to the back plate, then to the bridge, and finally to the river surface. The wire weight, when contacting the river, brings the positive voltage through the winding reel or drum to the amplifier input (Refer to figure 2). The amplifier is activated and the #47 indicator lamp lights. If the hinges become dirty or corroded the circuit may be broken or increase resistance and the indicator may not operate.

In the new conversion kit the green lead from the amplifier terminal point is grounded directly to the gage back plate, eliminating the hinges. On the older conversions the hinge problem can be overcome by either of the following methods: (1) Drill and tap a 6-32 screw hole in the back plate as described in step 7 of the attached instructions and reroute the green amplifier lead to this spot. (2) Obtain from the CLSC in Kansas City a grounding strap (WB S/N D501-14-1), one end of which can be installed under one hinge mounting screw on the back plate and the other end under the corresponding hinge mounting screw on the gage cover. This strap effectively bypasses the hinges.

Attachment

U.S. DEPARTMENT OF COMMERCE
ENVIRONMENTAL SCIENCE SERVICES ADMINISTRATION
WEATHER BUREAU
SILVER SPRING, MD. 20910

May 28, 1969

IN REPLY REFER TO:

Engineering Division W514

INSTRUCTIONS FOR FIELD CONVERSION OF WIRE WEIGHT RIVER GAGES FOR USE WITH TRANSISTORIZED INDICATOR UNITS

The transistorized indicator unit, when installed on a wire weight river gage, provides a visual indication when the wire weight contacts the river surface. This feature is especially valuable for determining river level at night or during foggy weather when visibility is limited.

The indicator unit, a transistorized amplifier with an attached #47 lamp, is part of a kit stocked at the Central Logistics Supply Center, Kansas City, Mo. under Weather Bureau stock No. D501-14, Water Level Detector Kit.

The following components are included in the kit:

1 - Amplifier unit with attached #47 indicator lamp

1 - Insulating washer set, 18 pieces

1 - Insulated winding knob

1 - Microswitch, type BZ3RW

1 - Plate, switch mounting, brass

2 - Machine screw, 6-32 x 7/8”

4 - Machine screw, 6-32 x 1/4”

6 - Machine screw, 1/4-20 x 1-1/4”

6 - Lock washer, #6

2 - Solder lug, #6, ring type

2 - Cable clamp, 1/4”, plastic

1 - Spring, 4” x 1/8”, for battery holder

A 6-volt battery, Burgess F4BP (WB S/N 17-B-2-16), is not included with the kit. It should be ordered from the CLSC when the kit is ordered.

INSTALLATION PROCEDURE - (Refer to figure 1 for identification of components).

1. Remove the drum carriage frame from the back plate by removing the six l/4-20 x 3/4" mounting screws. These screws will be replaced by the six 1/4-20 x 1 -1/4" screws in the kit.

2. Replace the brass winding knob with the insulated winding knob from the kit.

3. With a drill, enlarge the six mounting holes in the drumcarriage frame to 5/16" diameter.

4. Drill and tap a 6-32 hole in the right hand member of the drum carriage frame, as shown in sketch A of figure 3 attached. Use a #36 drill bit.

5. Mount the amplifieron the right hand drum carriage frame, as shown in figure 1. To do this, remove the cover from the amplifier unit (this contains the large 7/16" hole and the small 1/8" hole). Remove the securing nut from the right end of the idler pulley rod, install the amplifier cover with the large hole on the rod, and replace the securing nut finger tight. The small hole in the cover should line up with the tapped hole in the frame. Use a 6-32 x 1/4" screw and lock nut here, and tighten both the screw and pulley rod securing nut.

6. Reassemble the amplifier unit. Be sure that its position is similar to that in figure 1.

7. Drill and tap one 6-32 hole in the back plate about 3/8" to the left of the top of the upper hinge. The position is not critical since it serves only as a connecting point for the 6-inch green lead from the amplifier unit (this is marked "TO BACK PLATE" on figure 2).

8. Drill and tap two 6-32 holes in the gage cover as shown in sketch B of figure 3. Inside the cover fasten two ring type solder lugs, as shown in figure 1. Use two 6-32 x 1/4" s c r e w s and lock washers. Bend the ends of the lugs out from the cover so that the 4" x 1/8" spring can be hooked through the holes to form a battery retainer as shown.

9. Mount the brass switch bracket over the top cover hinge, as shown in figure 1. To install, remove the two lower hex head screws from the top cover hinge, insert them in the two 1/4" holes in the bracket and replace the screws. See sketch D of figure 3.

10. Replace the drum carriage frame on the back plate using the six 1/4"-20 x 1-1/4" screws and the insulating sleeves and washers provided in the kit. Refer to sketch E of figure 3 for mounting details.

11. With the drum carriage frame in position as shown in figure 1, the microswitch assembly can be installed. Mount the switch vertically on the brass switch bracket (see sketch D of figure 3) with one 6-32 x 7/8" machine screw and lock washer in the bottom hole. Use the other 6-32 x 7/8" screwwith a 1/4" plastic cable clamp to dress the amplifier cable as illustrated in sketch F of figure 3. Use the top mounting hole of the microswitch for this purpose.

12. Dress the amplifier cable in an easy loop through a 1/4" plastic cable clamp which issecured by the rear top amplifier cover mounting screw. Refer to sketch F of figure 3. Be sure that the cable has enough slack to avoid strain when the gage cover is open. Be sure also that it will not catch on anything when the cover is opened and closed.

13. Ground the 6" green amplifier lead to the back plate with a 6-32 x 1/4" screw and lock washer in the tapped hole 3/8" to the left of the upper hinge.

14. Adjust the microswitch by bending the arm so that it opens the circuit when the gage cover is 1/4" from fully closed, measured at the lock hasp. When the cover is opened more than 1/4" the switch closes the circuit to the battery. (The switch is wired "normally closed.").

15. Install the 6-volt battery behind the retaining spring and adjust spring if necessary to obtain a snug fit. Connect the two leads from the switch to the battery. Be sure that the red lead is connected to positive (+) and the black lead to negative (-). Do not reverse polarity.

16. Check the system for proper operation . With the gage cover open the lamp should glow dimly when one hand touches the drum and the other hand the cover. A direct short with a jumper between the cable reel and the cover should make the lamp glow brightly. An 82,000 ohm resistor jumpered between these two points should cause the lamp to glow at about two-thirds of full brilliance.

If the unit does not operate properly, or stays on whenever the gage cover is open, check wiring connections to switch and battery. Check installation of the insulated washers to be sure the cable reel carriage is fully insulated from the back plate. Check battery voltage (6 volts) and also the lamp (#47 radio pilot lamp). An amplifier unit found to be defective should be returned for replacement.

The converted wire weight gages can be installed on steel and most concrete bridges or piers without the need of aground return wire, the electrical circuits being from the amplifier through the cable reel, cable, water of the stream, bridge structure, gage back plate, and back to the amplifier. On metal bridges make sure that the back plate of the gage has electrical contact with the metal of the bridge structure. In the case of concrete bridges or structures, it is helpful to spray the concrete area to which the gage is attached, with General Cement TV Tube Koat, a conductive paint packaged in pressurized spray cans and available from most radio parts stores. An area of several square feet should be sprayed and the gage so mounted that the metal back plate of the gage makes contact with the sprayed area. If this does not provide an effective ground, a separate ground wire can be run connecting the back plate of the gage with the metal work of the bridge, a water pipe, or a ground rod sunk in the earth. To test the ground return circuit, one has only to lower the gage weight until it touches the water and then observe whether the lamp lights. For a more precise measurement, disconnect the green wire at the gage back plate, run the gage cable out until the weight touches the water and then, with an ohmmeter, measure the resistance between the cable reel and the back plate. A resistance of up to 50,OOO ohms (measured in dry weather) can be tolerated.

During damp weather operation of the gage, there may be some slight glowing of the lamp filament as the weight is lowered, but the sudden increase in lamp brilliance when the weight touches the water should be unmistakable. Damp weatheroperation may be improved by polishing the insulated washers with Dow Corning Silicone Grease before installation. Occasionally, after installation of the gage, exposed portions of the washers should be cleaned and re-polished with the grease; however, do not leave a heavy coating of grease on the washers as it will eventually become fouled with dirt.

Batteries (Burgess F4BP) will need to be replaced about once each year. The #47 indicator lamps may occasionally need replacement. Additional maintenance will involve only keeping the gage reasonably clean of dirt and other foreign matter, particularly the insulated washers. Converted gages should not be left standing with the cover open unless the battery is first disconnected. Always remove batteries and weights before shipping gages.

There is no electrical shock danger to personnel inherent in operating the unit as the only potential source involved is the 6-volt lantern battery.

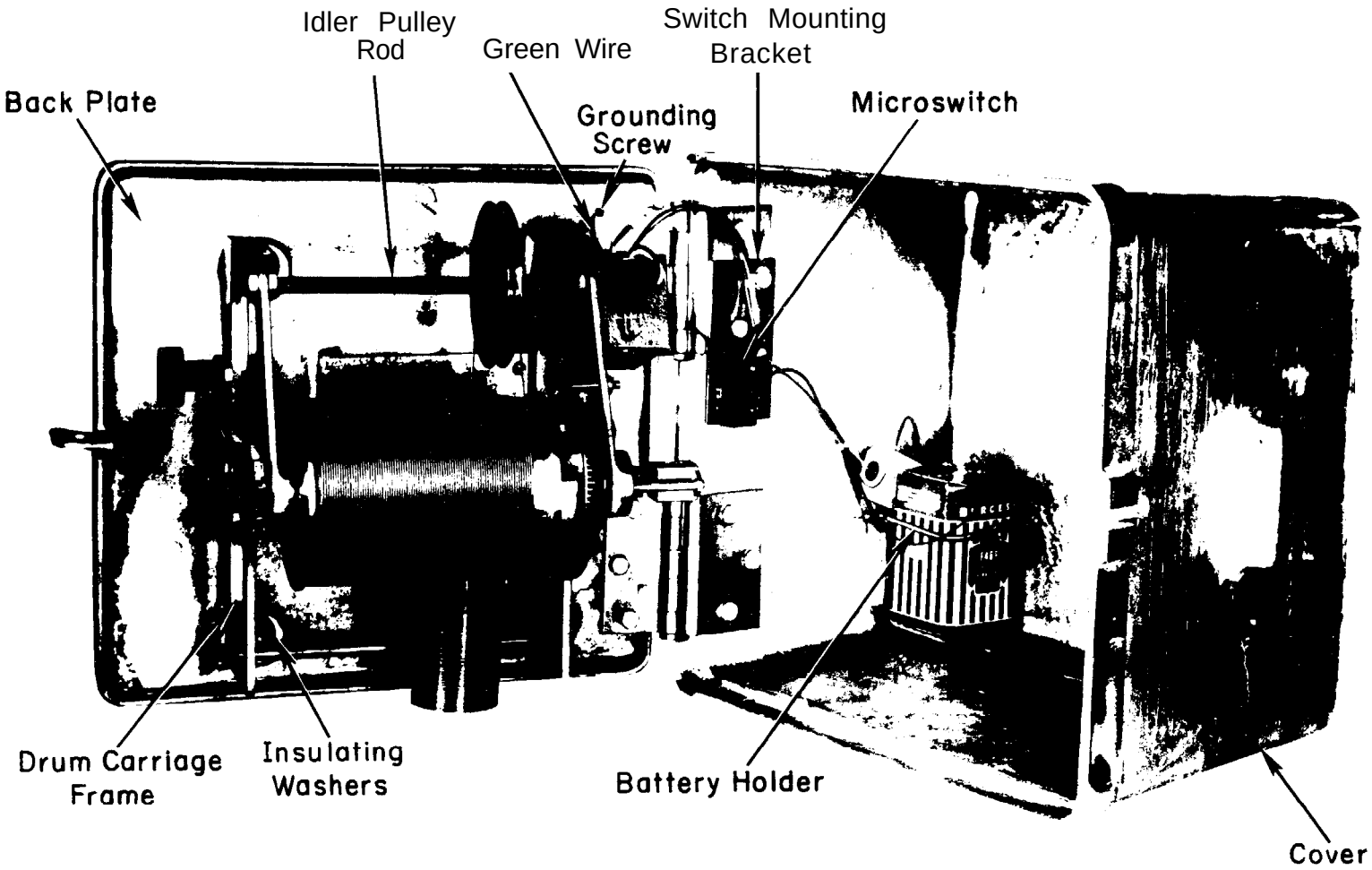

Fig. I Converted Wire-Weight Gage

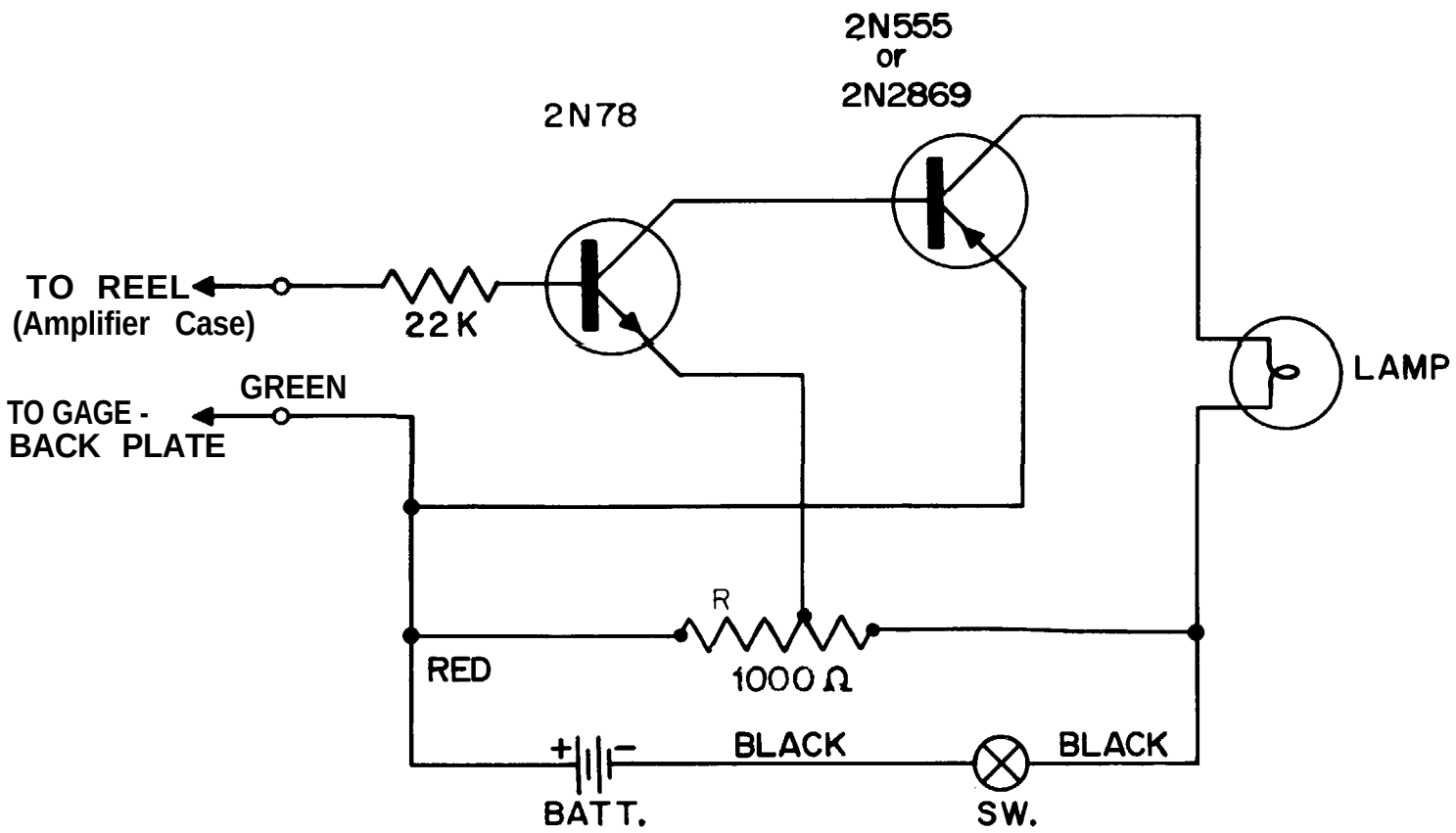

LAMP - #47 PILOT LAMP
BATT - 6 VOLT, BURGESS F4BP
SW. - BZ3RW MICROSWITCH
R-BOURNS 275 TRIMIT

INDICATOR UNIT WIRE WEIGHT
RIVER GAGE

FIG. 2

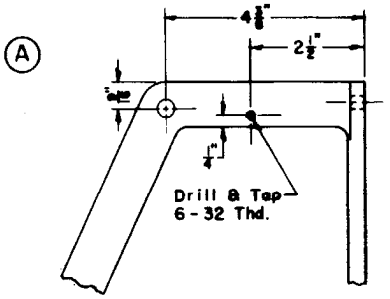

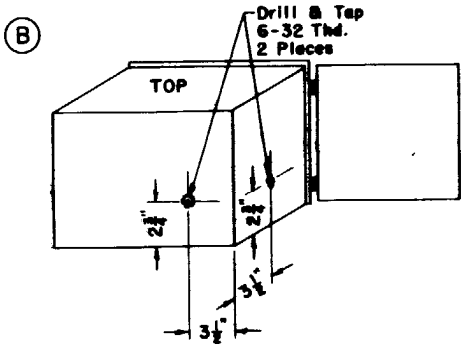

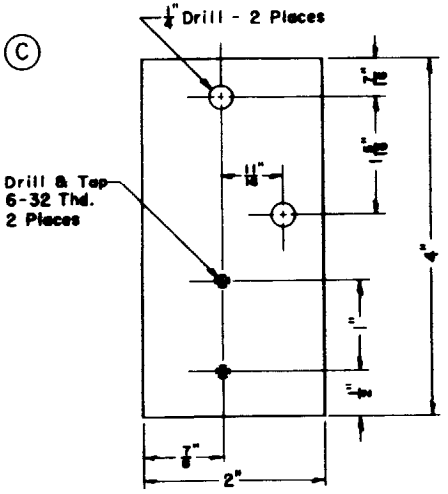

SWITCH BRACKET
Mat'l. - Brass 1/16" Stock

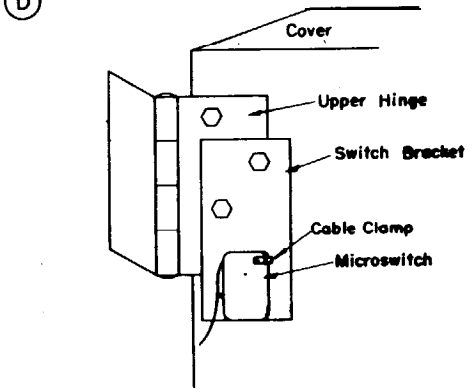

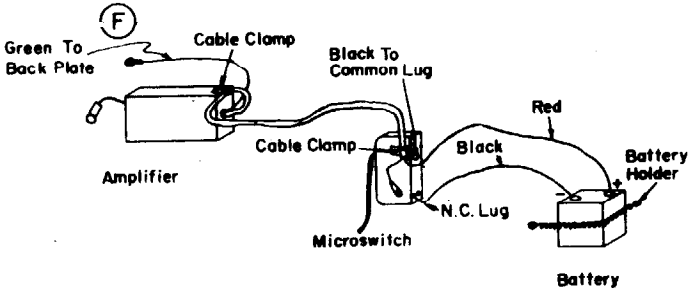

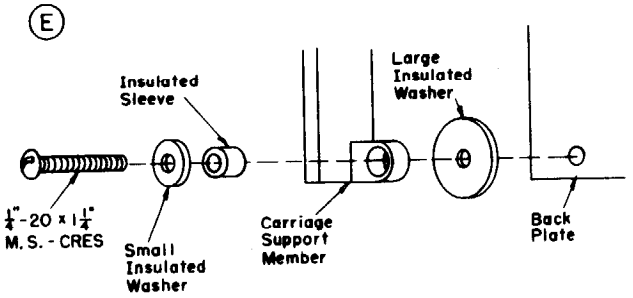

FIG. 3

U.S. DEPARTMENT OF COMMERCE WASHINGTON 25, D.C.

WEATHER BUREAU

INSTRUMENTAL ENGINEERING DIVISION

CONVERSION DETAILS

WIRE WEIGHT RIVER GAGE

APPROVED BY
DRAWN BY W.V. Compton
SCALE
DATE 9-14-59

DRAWING NO.
450-4105/J

U.S. DEPARTMENT OF COMMERCE
ENVIRONMENTAL SCIENCE SERVICES ADMINISTRATION
WEATHER BUREAU
SILVER SPRING, MD. 20910

June 20, 1969

IN REPLY REFER TO:

Engineering Division W514

HYDROLOGIC GAGING SYSTEM MAINTENANCE NOTES
(For Electronics Technicians & Substation Network Specialists)

33. Maintenance Bulletin for Fischer & Porter Precipitation Recorders

A maintenance manual for Fischer & Porter precipitation recorders, recently issued by the company, is being forwarded to all Electronics Technicians and Substation Network Specialists. The manual, tailored for the model 1548, 1558, 1559, and 1558 and 1559 Design Sequence A2 recorders, is well written and offers many practical hints and procedures for adjusting the Fischer & Porter precipitation gages. Much of the material can also be applied to ADR river gages as well.

The manual is identified as Fischer &, Porter Istruction Bulletin 35-9009, Engineering Handbook No. 10-206. The following information should be entered in Engineering Handbook No. 10 Manual Index - Precipitation Gages, page 5:

Manual Number	Title
10-206	Maintenance Bulletin for Series 35-1548, 35-1558 and 35-1559 Precipitation Gage Recorder (Fischer & Porter IB 35-9009)

U.S. DEPARTMENT OF COMMERCE
ENVIRONMENTAL SCIENCE SERVICES ADMINISTRATION
WEATHER BUREAU
SILVER SPRING, MD. 20910

March 2, 1970

IN REPLY REFER TO: W514

TO : All Regional Headquarters, Area Electronic Supervisors, Electronics Technicians and Substation Network Specialists (SNS)

FROM : Director, Executive and Technical Services

SUBJECT: Transmittal Memo for Engineering Handbook No. 10, Issuance 70-3

1. Material Transmitted:

Engineering Handbook No. 10 - Hydrologic Equipment, Section 2.1; Maintenance Note No. 37, Fischer & Porter Precipitation Gage Repair Modules.

2. Summary:

Maintenance Note No. 37 provides information on the Fischer & Porter Precipitation Gage, Repair Modules recently forwarded to selected ELTEC's and Substation Network Specialists. Instructions for installing these units in both telemetering and non-telemetering gages are included.

3. Effect on Other Instructions:

None.

R .C. Grubb

U.S. DEPARTMENT OF COMMERCE
ENVIRONMENTAL SCIENCE SERVICES ADMINISTRATION
WEATHER BUREAU
SILVER SPRING, MD. 20910

March 2, 1970

IN REPLY REFER TO:

Engineering Division W514

HYDROLOGIC GAGING SYSTEM MAINTENANCE NOTES
(For Electronics Technicians & Substation Network Specialists)

37. Fischer & Porter Precipitation Gage Repair Modules

Recently a quantity of Fischer & Porter precipitation gage repair modules were forwarded to selected ELTEC's and Substation Network Specialists to be used as replacements for defective similar assemblies in operational gages. The repair modules are directly interchangeable with the mounting plate (front plate) assemblies in all Fischer & Porter precipitation gages.

The modules are contained in wooden carrying cases which provide protection and ease of handling. The cases, however, have not been designed for cross country commercial shipment without proper packing.

A number of the repair modules were procured without telemetering contacts. These were forwarded to Substation Network Specialists for use with their non-telemetering gages. Telemetering repair modules were forwarded to selected ELTEC's for use with telemetering gages, although these units can be used with non-telemetering gages, if required.

Except for a few repair modules purchased previously, the units are not equipped with timers. It will be necessary, when installing the modules, to transfer the timer assemblies to the replacement units. Attached to this maintenance note are instructions for removing the defective front plate assemblies and installing the repair modules in all Fischer and Porter precipitation gages. Instructions for telemetered and non-telemetered gages are provided separately, due to differences in wiring.

The Fischer & Porter precipitation gag es are rugged and well -designed, and can operate for a long period of time with a minimum of maintenance. As the gages age, however, mechanical problems begin to increase, and it is at this point that the repair modules will become most valuable. It is expected that much outage time and field maintenance time will beeliminated by use of the modules. It is essential that the defective front plate assemblies be repaired at the home base as soon as possible so that they may be available for immediate replacement, if required. Many replacement gage components are stocked at the Central Logistic Supply Center, and, as the need arises, additional parts are added to stock. Hydrologic Maintenance Note No. 35 contains the most recent list of CLSC stocked precipitation gage components.

The Fischer & Porter gages are constructed of precision components and, consequently, require precise adjustments to enable them to function effectively. Some examples where careful adjustment is required are:

(1) Replacement of the sprocket assembly : Bearing blocks must be carefully adjusted to avoid misalignment of the punch arm assembly. The punch pins can be easily damaged if they do not contact the code disc hills and valleys squarely. The adjustment of the contact of the lower pawl assembly to the sprocket is also critical.

(2) Punch die block replacement: The punch retaining plate and stripper plate adjustments are close and critical for proper operation. Correct punch spring tension is also important.

(3) Telemetering contacts and contact arm adjustments must be carefully made to avoid telemetering errors and damage to punches and contacts.

Fischer & Porter Maintenance Bulletin No. 35-9009 is a n extremely valuable manual for use in maintaining and repairing all Fischer & Porter precipitation gages and should be carefully read and understood by ELTEC's and Substation Network Specialists who work on the equipment.

Instructions for Replacing Defective Fischer & Porter Front Plate Assembly with Repair Module (Non-Telemetering)

1. Remove the hood, collector bucket, and lower case assembly from the gage.

2. Disconnect the positive (+) lead from the 7.5V battery.

3. Immobilize the code disc with a piece of masking tape placed on the disc and the front plate frame. This is to prevent loose pulley cables from being caught and damaged by movement of the code disc gearing.

4. Remove the two pulley cables from the upper cable tension spring and the lower frame respectively. This disconnects the front plate mechanical assembly from the weighing assembly.

5. Remove the complete timer assembly and the three spacers from the front plate assembly. Install the spacers in the three corresponding holes of the replacement repair module.

6. Remove the red and white punch motor leads from the terminal board (TB1) on the timer assembly.

7. Remove from terminal board (TB1) the three or five leads connected to the punch motor leaf switch (S1). The front plate (mounting plate) is now disconnected and ready for removal.

8. Loosen the two front plate hold-down screws and slide the unit forward until it becomes free. Install the replacement repair module and tighten the hold-down screws.

9. Install the timer assembly and connect the punch motor and leaf switch leads to terminal board TB1 as follows:

   (a) Punch motor red lead to TB1-C.

   (b) Punch motor white lead to TB1-A.

   (c) Leaf switch (S1) orange lead to TB1-C.

   (d) Leaf switch (S1) blue lead to TB1-D in model 1548.

   (e) Leaf switch (S1) blue lead to TB1-E in models 1558 and 1559 (Al and A2).

(f) Leaf switch (S1) yellow lead to TB1-E In model 1548.

(g) Leaf switch (S1) yellow lead to TB1-D in models 1558 and 1559 (Al and A2).

(Note: The repair module does not have an indicator lamp (DS1) which is included in the 1548 and 1559 (A1) model gages. Therefore only three leads, orange, blue, and yellow, are connected to the leaf switch. The grey and white/green leads, normally found in 1548, 1558 (A1) and 1559 (A1) models and connected to DS1, are not connected to the switch . The pushbutton switch (S3) need only be depressed for a period of two seconds to accomplish a manual punchout operation. A punchout occurs every time in the extreme left-hand column of the tape (commonly called an 80 punch).)

10. Connect the two pulley cables to the gage weighing mechanism as described in Section B (Code Disc Drive), pages 2 and 3 of Fischer & Porter Instruction Bulletin 35-9009, Maintenance Bulletin for Series 35-1548, 35-1558 and 35-1559 Precipitation Gage Recorder (Engineering Handbook No. 10-206).

It is recommended that the collector bucket be removed when connecting the pulley cables, and that the gage be checked for calibration upon completion of the operation. If a calibration is not practicable, a punchout check of the 00.0 and 10.0 inch points should be made.

The defective front plate assembly should be fastened in place in the carrying box (making sure that the code disc is locked by masking tape) and repaired later at the home station.

Instructions for Replacing Defective Fischer & Porter Front Plate Assembly with Repair Module (Telemetering)

1. Remove the hood, collector bucket, and lower case assembly from the gage.

2. Disconnect the positive (+) lead from the 7.5V battery.

3. Immobilize the code disc with a piece of masking tape placed on the disc and the front plate frame. This is to prevent loose pulley cables from being caught and damaged by movement of the code disc gearing.

4. Remove the two pulley cables from the upper cable tension spring and the lower frame respectively. This disconnects the front plate mechanical assembly from the weighing assembly.

5. Remove all the leads from telemetering terminal strip TB2 and remove all the cable clamps necessary to free the telemetering cables.

6. Remove the complete timer assembly and the three spacers from the front plate assembly. Install the spacers in the three corresponding holes of the replacement repair module. Pull the small telemetering cable through the hole in the front plate assembly.

7. Remove the red and white punch motor leads from the terminal board (TB1) on the timer assembly.

8. Remove from terminal board (TB1) the three or five leads connected to the punch motor leaf switch (S1). The front plate (mounting plate) is now disconnected and ready for removal.

9. Loosen the two front plate hold-down screws and slide the unit forward until it becomes free. Install the replacement repair module and tighten the hold-down screws.

10. Install the timer assembly and connect the punch motor and leaf switch leads to terminal board TB1 as follows. (Be sure that the small telemetering cable is pushed through the large hole in the lower left front of the repair module.)

    (a) Punch' motor red lead to TB1 -C.

    (b) Punch motor white lead to TB1 -A.

    (c) Leaf switch (S1) orange lead, to TB1-C.

(d) Leaf switch (S1) blue lead to TB1-D in model 1548.

(e) Leaf switch (S1) blue lead to TB1-E in models 1555 and 1559 (Al and A2).

(f) Leaf switch (S1) yellow lead to TB1-E in model 1548.

(g) Leaf switch (S1) yellow lead to TB1-D in models 1558 and 1559 (Al and A2).

(Note: The repair module does not have an indicator lamp (DS1) which is included in the 1548 and 1559 (A1) model gages. Therefore only three leads, orange, blue, and yellow, are connected to the leaf switch. The grey and white/green leads, normally found in 1548, 1558 (A1) and 1559 (Al) models and connected to DS1, are not connected to the switch. The pushbutton switch (S3) need only be depressed for a period of two seconds to accomplish a manual punchout operation. A punchout occurs every time in the extreme left-hand column of the tape (commonly called an 80 punch). This punch contact is not connected for telemetry.)

11. Route the small telemetering cable from the timer along with the large telemetering cable to terminal strip TB2 on the base and secure them with the clamps removed in Step 5.

12. Connect the telemetering leads to TB2 as follows:

(a) Large cable - (All models)

Color Code	Terminal
Violet	.1
White/violet	.2
White/blue	.4
White/green	.8
White/yellow	1
White/orange	2
White/red	4
White/brown	8

White/tan	No connection - tape this up. This lead is connected to a translator alignment hole punch contact and can be used as an event (punchout) indicator in certain telemetering applications - not used by the Weather Bureau.
White/black	10
White	ground (-) (B in model 1548)

(b) Small cable (from timer) (Model 1548)

Color Code	Terminal
Red	+
Brown	A
Green	B
Orange	C
Blue	D
Yellow	E

(c) Small cable (frun timer) (Models 1558 and 1559 A1 & A2)

Color Code	Terminal
Red	(+)
White/green	A (may be brown)
White	(-)
Orange	C
Yellow	D
Blue	E

13. Connect the two pulley cables to the gage weighing mechanism as described in Section B (Code Disc Drive), pages 2 and 3 of Fischer & Porter Instruction Bulletin 35-9009, Maintenance Bulletin for Series 35-1548, 35-1558 and 35-1559 Precipitation Gage Recorder (Engineering Handbook No. 10-206).

It is recommended that the collector bucket be removed when connecting the pulley cables, and that the gage be checked for calibration upon completion of the operation. If a calibration is not practicable, a punchout check of the 00.0 and 10.0 inch points should be made.

The defective front plate assembly should be fastened in place in the carrying box (making sure that the code disc is locked by masking tape) and repaired later at the home station,

U.S. DEPARTMENT OF COMMERCE
National Oceanic and Atmospheric Administration
NATIONAL WEATHER SERVICE
Silver Spring, Md. 20910

September 14, 1971

W514

TO : All Regional Headquarters, Area Electronic Supervisors, Electronics Technicians, and Substation Network Specialists (SNS)

FROM : Chief, Engineering Division

SUBJECT: Transmittal Memorandum for Engineering Handbook No. 10, Issuance 71- 4

1. Material Transmitted:

Engineering Handbook No. 10, Hydrologic Equipment, Section 2.1; Maintenance Notes No. 42, Fischer & Porter Model 1548 Precipitation Gage Updating, and No. 43, Prevention of Flexure Damage in the Fischer & Porter Precipitation Gage.

2. Summary:

Maintenance Note No. 42 points out that disassembly and assembly instructions in Hydrologic Gaging Modification No. 1 can be applied to routine servicing of the Precipitation Gage.

Maintenance Note No. 43 cautions against improper handling of the gage which may cause flexure damage.

3. Effect on Other Instructions:

None.

J.A. Cunningham

J.A.Cunningham

HYDROLOGIC GAGING SYSTEM MAINTENANCE NOTES
(For Electronics Technicians & Substation Network Specialists)

42. Fischer & Porter Model 1548 Precipitation Gage Updating.

Hydrologic Gaging Modification No. 1, recently issued, requires a modification kit to be used in updating the Model 1548 precipitation gage. Fifty kits were purchased initially and were distributed. About two hundred more kits are required to complete the job but are not available, due to lack of funds. It is hoped that these additional kits can be purchased and distributed some time next year.

The instructions in Modification No. 1, however, can be used to advantageby ELTEC's and Substation Network Specialists when performing maintenance on the gage, such as replacing the sprocket (Procedure Step 8 or 9), the punch die block (Procedure Step 10 or 11), or the flexures in the weighing mechanism (Procedure Step 3. All kit components, with the exception of the base, lower case assembly, identification plate, and retaining pins are, or soon will be, available from the Central Logistics Supply Center, as replacement parts.

The Fischer & Porter precipitation gage is a precision, highly standardized unit capable of consistent operation for periods of six months or more in remote areas without attention. With proper maintenance, timely replacement of worn parts, and careful adjustment of components, the gage will give many years of consistent, highly reliable service.

None of the components installed in Modification No. 1 will actually make the precipitation gage perform better, except where damaged flexures or worn-out punch holder and die assemblies are replaced. However, the improved design and better material of the new components will increase the reliability of the gage and extend its life. The new punch motor bracket, for example, offers a wider range of adjustment for the leaf switch; consequently, the switch should operate under less strain and should last longer. The stainless steel sprocket and redesigned lower pawl eliminate chipping of the sprocket teeth that has been a problem in the past. The switch cover acts as a barrier to moisture formation on the punch motor leaf switch. This condition has been known to cause continuous punching.

Since the requirement for an "80 punch" indication during manual operation has been dropped, there is no need for the indicator light assembly, or for the "80 punch" linkage connected to the manual punch knob. Procedure Step 5 describes the removal of the indicator light and related circuits, and Step 6 directs the removal of the "80 punch" linkage. NOTE: The cylindrical steel punch block (F&P #406B151U01) pro-

vided in the kit, is not used in Modification No. 1. This block provides a continuous "80 punch", which is no longer desired. The punch block should be discarded. Modification of the Model 1548 electrical circuit (Procedure Step 5) makes it equivalent to the electrical circuit of the Model 1559(A2) gage.

Another modification (Hydrologic Gaging Modification No. 2) will be issued shortly detailing changes to be made in the electrical circuits and "80 punch" feature of the Model 1558 and 1559(A1) gages. Since this gage has the large door, no new base and lower case assembly are required to update it. The mechanical components required to make this gage equivalent to the A2 gage are, except for the tape supply assembly, stocked at the Central Logistics Supply Center. The components for the new tape supply assembly will soon become stock items. These components are the same as those described in Modification No. 1 and their installation procedures are the same. No kits will be issued for Modification No. 2 since it is assumed that the updating of parts will be accomplished over a period of time through normal maintenance. NOTE: If a new plastic motor switch cam (Weather Service S/N D111-MP155, FSN 5930-410-4316) is ordered from stock, a new punch motor mounting bracket (Weather Service S/N D111-SP150, FSN 6680-411-7956) should also be ordered to allow more adjustment range for the motor switch.

The modification of the Al gage electrical circuit, like that of the 1548 gage, will make it equivalent to the A2 electrical system. Substitution of the Fischer & Porter Mark IV solid state timer for the Ergas timer can be quickly and easily accomplished on a gage which has its electrical circuit updated.

It is hoped that funds may be made available for a large scale change to the solid state timer in one or two years. The general reliability of the gages will be greatly improved if this is accomplished.

HYDROLOGIC GAGING SYSTEM MAINTENANCE NOTES
(For Electronics Technicians & Substation Network Specialists)

43. Prevention of Flexure Damage in the Fischer & Porter Precipitation Gage.

Bent or cracked flexures in the weighing mechanism of theFischer& Porter precipitation gage can result in loss of sensitivity in the gage. For this reason a close look at all eight flexures should be included during a routine inspection. A bent flexure generally is shaped like a "V" a cracked flexure should be obvious and easy to spot. Replacement flexures are available from the Central Logistics Supply Center.

Damage to the flexures is often a result of improper locking and packing of the gage for shipment. Strong lateral blows to the unit during shipment can then cause distortion of the flexures.

Another cause of this type of damage is improper handling of the gage during installation or replacement. When moving the Fischer & Porter precipitation gage, it is suggested that the hood, collector, force post, and lower case be removed. The gage can then be lifted by grasping the base at the hollowed-out hand holes or by grasping fixed portions of the scale support or scale base. DO NOT GRASP THE MOVABLE PORTIONS 0F THE THE WEIGHING ASSEMBLY.

If the gage is to be packed for reshipment, refer to the appropriate Instruction Bulletin, Pages 2 and 3, for shipping instructions.

U.S. DEPARTMENT OF COMMERCE
National Oceanic and Atmospheric Administration
NATIONAL WEATHER SERVICE
Silver Spring, Md. 20910

Date: February 7, 1972

Reply to Attn of: W514

Subject: Transmittal Memorandum for Engineering Handbook No. 10, Issuance 72-2

To: All Regional Headquarters, Area Electronic Supervisors, Electronics Technicians, and Station Network Specialists (SNS).

1. Material Transmitted:

Engineering Handbook No. 10, Hydrologic Equipment, Section 2.1; the following Maintenance Notes:

44. CLSC Stocking of Motor Oil for Precipitation Gages. — NOT IN INDEX
45. A New Fischer & Porter Punch .
46. Parallel Leaf Switch Wiring a Possible Cause of BDT Memory Erase.
47. Lubrication of Precipitation and River Gage Cam Surfaces.
48. Precipitation Gage Tape Feed Problems,
49. Comments on the New Fischer & Porter Precipitation Gages,

2. Summary:

Maintenance Note No. 44 advises the ELTEC's and SNS's that motor oil used to retard evaporation, formerly a local purchase item, is also available from CLSC stock.

Maintenance Note No. 45 advises against intermixing of old style Fischer & Porter Tape Punches with the newly designed ones.

Maintenance Note No. 46 suggests that one section of a dual section rain or river gage leaf switch should be disabled if BDT erasure is encountered.

Maintenance Note No. 47 advises lubrication of certain gage cam surfaces.

Maintenance Note No. 48 discusses rain gage tape feed problems and remedies.

Maintenance Note No. 49 offers interconnection diagrams for use in connecting 50DB2020 BDT's with the new type 35B1559 precipitation gages or with the latest model ADR river gages.

3. Effect on Other Instructions:

None.

J. A. Cunningham
Chief, Engineering Division

HYDROLOGIC GAGING SYSTEM MAINTENANCE NOTES
(For Electronics Technicians & Substation Network Specialists)

44. CLSC Stocking of Motor Oil for Precipitation Gages.

Hydrologic Maintenance Note No. 40 suggests local purchase of SAE 10 motor oil in place of the more expensive Primol 355 for gage evaporation control. SAE 10 motor oil is now available in quart cans from the Central Logistics Supply Center under Stock Number 014-0-11-1 (FSN 9150-054-0000-X), providing the technician with the option of local purchase or stock requisition.

Still available for winter use is the premixed combination of ethylene-glycol and oil, in quart cans, under Stock Number 052-A-5 (FSN 6850-998-9410).

45. A New Fischer & Porter Punch.

The Fischer & Porter Company has changed the design of the punches used in their precipitation and river gages. The diameter and length of the punches are the same; however, the rear of the punches, the flat milled section with the tab, has been redesigned. The new punches are generally interchangeable with the old ones, though some switching around in the die block may be required however, difficulties may be encountered in obtaining fine adjustments of the retainer and stripper plates, and the telemetering contacts if the new and old types are intermixed. It is suggested that, if punch replacement is indicated, enough individual punchesshould be on hand to provide all of one kind in the die block, either all old style, or all new style punches. If necessary, the complete punch assembly can be ordered from CLSC as S/N D111-A162 FSN625-350-3541 for the precipitation gage, or S/N D550-A104, FSN 6660-907-8038 for the ADR river gage recorder.

Punches are made of extremely hard material and should operate efficiently for a long time. If punching difficulty occurs, and no punches are damaged, all the gage adjustments connected with this operation should be closely checked. Pages 11, 12, 13, and 14 of the Fischer & Porter Maintenance Bulletin 35-9009 (EHB10-206) contain valuable information on the punching mechanism andshould be reviewed when maintenance work is contemplated in this area.

46. Parallel Leaf Switch Wiring a Possible Cause of BDT Memory Erase.

The new 35B1559 precipitation gages, along with the 1558 and 1559(A2) gages, and the river level ADR's have a drive motor leaf switch with both sections wired in

parallel, that is, yellow to yellow, orange to orange, and blue to blue. If one section of the switch failed, the other section would keep the gage operating. Some times these switches do not operate in synchronism, and, since they are of the snap type, a momentary voltage may appear on both the yellow leads and the blue leads at the same time during a punchout. This may cause a memory erase if a BDT is connected.

If trouble is encountered with this switch, it is suggested that three leads of the parallel connected leaf switch be removed; that is, one blue, one orange, and one yellow lead should be clipped off at the switch terminals, folded back, and taped after determining that no short circuits exist. Only one switch section should now be in operation.

47. Lubrication of Precipitation and River Gage Cam Surfaces.

The Fischer & Porter Company recommends the use of a thin coating of silicone grease (Dow-Corning DC-33, or equal) on the surfaces of the code disk locking cam and the punch arm actuating cam. Do not apply any grease to the motor switch cam. Refer to Figure 4 - Programming Shaft - in F&P Maintenance Bulletin 35-9009 (EHB-10-206) for location of components. Lubrication of these parts will ease the strain on the gear motor during the punch cycle.

48. Precipitation Gage Tape Feed Problems.

Hydrologic Maintenance Note No.27, dated December 1968, recommended a new tape-threading procedure and disposition of the tape guide spring on the A2-type precipitation gages to eliminate problems in this area. Although this procedure proved effective, tape feed difficulty is occasionally experienced with these gages, and even with the older 1548, 1558(A1), and 1559(A1) gages, especially during cold, wet weather.

The Fischer & Porter Company, after two years of research, has improved the design of the A2-type tape guide spring and the supply spool, and uses them in the new 35B1559 gages, The bowed spring washer in the tape supply spool, which provides a drag on the tape supply roll, has been removed, and the tape guide has its curved surfaces more smoothly finished. With the supply spool free to rotate (no tape drag) and with the tape threaded through the guide, the company claims that tape failures were reduced to zero over a six-month period in a test involving six gages.

It appears that the key to successful tape feed operation is to have a well-adjusted tape guide to control tape movement on the sprocket, a free no-drag supply spool and a smooth working take-up assembly. Maintenance Bulletin 35-9009(EHB10-206)

describes the tape transport operation on Pages 8, 9, and 10, and includes adjustment procedures for all the F&P precipitation gages. We feel that careful and proper adjustment of all the tape transport components should greatly reduce failures in this area. However, for some gages that continue to be troublesome, it may be advantageous to employ the latest concept of operation as described above. The A2 type tape guide and the supply spool assembly are on order and will shortly be in stock at the Central Logistics Supply Center.

The components required for an A2 type tape guide installation are:

WS STOCK NO.	DESCRIPTION	QTY.
1. D111A-MP144	Tape Guide, F&P #661B006U01	1
2. D111A-H102	Screw, binding head, #10-32 x 7/16" F&P #006L007T10	2
3. D111A-H104	Washer, lock, #10, F&P #085D010S31	2

The following are required for an A2-type supply spool assembly:

1. D111A-MP102	Spool Assembly, left, F&P #655A994U01	1
2. D111A-MP103	Spool Assembly, right, F&P #655B008U01	1
3. D111A-MP104	Bracket, tape supply, F&P #353B998U01	1
4. D111A-H101	Screw, truss head, 1/4-28 x 1/2" F&P #035A008T10	1
5. D111A-H102	Screw binding head, #10-32 x 7/16" F&P #006L007T10	2
6. D111A-H103	Washer, lock, 1/4", F&P #085D416S31	1
7. D111A-H104	Washer, lock, #10, F&P #085D010S31	2

For A2-type gages the tape guide, screws, and washers are the only parts needed; the spool assembly is on the gage. The soft bowed-washer fastened to the inside of the spool should be removed to eliminate tape drag. It can be clipped and removed with diagonal cutters. The tape roll should turn freely on the spindle. NOTE: DO NOT REMOVE THE BOWED-WASHER FROM THE SUPPLY SPOOL ON A GAGE WHERE THE TAPE GUIDE IS NOT TO BE USED.

For the 1548 and 1559(A1) gages, the mounting holes for the tape guide are drilled in the front mounting plate, but are not threaded. It will be necessary to tap these for a #10-32 screw. The holes are already sized for this tap.

Both the 1548 and 1558/1559(A1) gages use a tape supply bracket which consists of an upper section, a lower section, a tension spring, and a tape spool, When the tape guide is installed, the upper section of the bracket and the tension spring should be discarded. The tape roll spins freely on the tape spool which fits snugly into the slots of the lower bracket section. If the spool fits loosely, it can be removed and the sides of the bracket slightly squeezed together. When replaced, the spool should fit snugly.

If the A2-tape supply bracket assembly is required, it should be ordered as described above. The assembly is directly interchangeable with the older tape brackets.

49. Comments on the New Fischer & Porter Precipitation Gages.

The Fischer & Porter precipitation gages purchased by the National Weather Service over the past year are known as Model #35B1559. Although similar to the A2 gages in use over the past few years (mechanical components are identical and interchangeable), there are some significant design changes. Comments on these changes are noted below:

1. There is no "80" punch. Originally, the 1548, 1558(A1), and 1559(A1) gages employed the "80" punch, a punch in the extreme left-hand column of the tape, as an indicator for a manual punchout. The 1558(A2) gages produced an "80" punch at all times, which destroyed for us its significance as an indicator. Hydrologic Modification No. 1 for the 1548 gage, and future modifications for the Al and A2 gages aim toward elimination of the "80" punch.

2. The 35B1559 gage has returned to the use of the paper tension spring (tape guide). This component was discarded from the A2 gages in December 1968, in order to improve tape feed operation. (Refer to Hydrologic Gaging Maintenance Note No. 27.) After two years of research, and with an improved design of the tape guide and supply spool, the company feels this is the best way to go. We will stock this paper tension spring and supply spool for use on problem gages. The preceding Maintenance Note No. 48 discusses tape feed problems.

3. The new gages are equipped with electronic timers, just as were the A2-type gages, and the electrical wiring is the same. However, terminal board designations were changed, causing a great deal of confusion among electronic technicians who are connecting 50DB2020A BDT's to the gages. Figure 1, attached, shows the wiring of the new gage, while Figure 2 shows the gage connections to a Model 50DB2020A BDT. Note also that there are some ADR river gage wiring changes which can create confusion.

Attachments: 1 Copy - Figure 1
1 Copy - Figure 2

U.S. DEPARTMENT OF COMMERCE
National Oceanic and Atmospheric Administration
NATIONAL WEATHER SERVICE
Silver Spring, Md. 20910

Date: June 29, 1972

Reply to Attn of: W514

Subject: Transmittal Memorandum for Engineering Handbook No. 10, Insurance 72-3

To: All Regional Headquarters, Area Electronic Supervisors, Electronics Technicians and Substation Network Specialists (SNS)

1. Material Transmitted:

Engineering Handbook No. 10, Hydrologic Equipment, Section 2.1; the following Maintenance Notes:

50. Fischer & Porter Spare Parts Kits in CLSC Stock,
51. Standard Procedure for Removing and Rethreading the Tape on the Fischer & Porter Precipitation Gage.
52. Glycerin as a Gasket Lubricant.
53. Universal Rain Gage Replacement Parts.

2. Summary:

Maintenance Note No. 50 describes the new Fischer &, Porter spare parts kits recently added as CLSC stock items.

Maintenance Note No. 51 describes standard procedure for removing and rethreading Fischer &, Porter precipitation gage tape. Normally this operation is performed by cooperative observers; however, ELTEC's and SNS's should become familiar with all the details.

Maintenance Note No. 52 advises the use of glycerin as a gasket lubricant on Fischer & Porter gages.

Maintenance Note No. 53 lists Weather Service stock numbers for Universal Rain Gage weighing mechanisms recently placed into CLSC stock.

3. Effect on Other Instructions:

None.

J. A. Cunningham
Chief, Engineering Division

HYDROLOGIC GAGING SYSTEM MAINTENANCE NOTES
(For Electronics Technicians & Substation Network Specialists)

50. Fischer & Porter Spare Parts Kits in CLSC Stock.

Small parts kits for use in maintenance of Fischer & Porter precipitation gages have recently been put into stock at the Central Logistics Supply Center under NWS Stock Number D111-MS900 (FSN 6850-904-0000-X). The kits consist of a small metal box, similar to a fishing tackle box, and 83 plastic bags which can be opened and closed repeatedly. The bags contain small parts such as screws, washers, nuts, springs, ring fasteners, etc., which are used in the gages. The bags are numbered 1 through 83, and contain labels which provide descriptions and Fischer & Porter part numbers of the contents. A master list of all the parts and quantities supplied is enclosed in the box. The kits were purchased at a cost of $70.00 each.

The box contains a divider which keeps the bags in order and provides space for some additional small items such as drive motors, punch assemblies, etc., which the ELTEC or SNS may be carrying as spares.

Not all of the bags are used;* however, each one is numbered and placed in order in the kit. As the need for additional parts becomes evident, they will be placed in CLSC stock and have bag numbers assigned to them. All of the parts contained in the kit are, or will soon be, in CLSC stock.

The kits have been purchased from the Fischer & Porter Company and are exact replacements for the parts used in the gages. It is felt that the use of these items will eliminate future rust and corrosion problems caused by substitute items.

The kit does not contain replacements for every screw and bolt used in the Fischer & Porter gage. Consideration was given to selection of screws which could be used to replace other screws of slightly different length and type of head where these requirements are not critical. Most of the precipitation gage screws can be replaced with other type screws such as pan head for truss head, binding head for pan head, etc. The important thing is that they be made of stainless steel.

A list of the kit parts, similar to the master list in the box, is attached to this Maintenance Note. The numbered blank spaces represent empty bags that will be used in the future for additional parts that will be placed in CLSC stock. For instance, experience may show that the #10-32, 1-1/8" long shoulder screw (Fischer & Porter #396D026T30), and the F&P #424A104T10 sprocket spring should be a part of the kit.

Quantities of these items would be placed in stock and ELTEC's and SNS's advised by a maintenance note to requisition them and place them in bags #16 and #69, respectively. The new additions should then be added to the master list in the box.

* Numbers Only

Attachment: Parts List (3 Pages)

SMALL PARTS KIT FOR FISCHER & PORTER PRECIPITATION GAGE

Bag No.	Description	F&P' Number	Quantity
1	Screw, binding head, 2-56 x 3/16"	006D003T30	6
2	Screw, binding head, 2-56 x 1/4"	006D004T30	6
3	Screw, flat head, 2-56 x 1/2"	002D008T10	6
4	Screw, fillister head, 4-40 x 1/4"	004F004T30	6
5	Screw, fillister head, 4-40 x 5/16"	004F00ST30	6
6	Screw, binding head, 6-40 x 3/8"	006G006T30	6
7	Screw, fillister head, 6-32 x 3/16"	004H003T30	6
8	Screw, binding head, 6-32 x 3/8	006H006T30	6
9	Screw, fillister head, 6-32 x 9/16"	004H009T30	6
10	Screw, flat head, 6-32 x 2-1/2"	002H248T30	6
11	Screw, fillister head, 8-32 x 3/8"	004K006T30	6
12	Screw, flat head, 10-32 x 3/8"	002L006T30	6
13	Screw, binding head, 10-32 x 5/8"	006L010T30	6
14	Screw, fillister head, 10-32 x 1"	004L108T30	6
15	Bolt, hex head, 1/4-20 x 1-5/8"	040B158T30	4
16			
17			
18			
19			
20	Nut, hex, 2-56	080D200T30	6
21	Nut, hex, 4-40	080F200T30	6
22	Nut, hex, 5-40	080G200T30	6
23	Nut, hex, 6-32	080H200T10	6
24	Nut, hex, 10-32	080L200T30	6
25	Nut, hex, 1/4-20	081B200S31	4
26	Nut, self-locking 6-32	092H017U05	6
27	Nut, self-locking 1/4-20	081B300T10	4
28			
29			
30	Washer, flat, #2	085A002T30	6
31	Washer, flat, #4	085A004T30	6
32	Washer, flat, #6	085A006T30	6
33	Washer, flat, #8	085A008T30	6
34	Washer, flat, #10	085A010T30	6
35	Washer, flat, 1/4"	085A416T30	6
36			
37			

SMALL PARTS KIT FOR FISCHER &, PORTER PRECIPITATION GAGE

Bag No.	Description	F&P Number	Quantity
38			
39			
40	Washer, lock #2	085D002S31	6
41	Washer, lock; #4	085D004S31	6
42	Washer, lock, #6	085D006531	6
43	Washer, lock, #8	085D008S31	6
44	Washer, lock, #10	085D010S31	6
45	Washer, lock, 1/4"	085D416S31	6
46			
47			
48			
49			
50	Ring fastener, external, .145" id flat E	106A203U01	6
51	Ring fastener, external, size 62, Tru-Arc	106A320U01	6
52	Ring fastener, external, size 31, flat E	106A111U01	6
53	Ring fastener, external, size 25, flat E	106A109U01	6
54	Ring fastener, external, size 18, flat E	106A115U01	6
55	Ring fastener, external, .225 id, Tru-Arc	106D024U01	6
56	Ring fastener, external,, .327 id, C-ring	106D014U11	6
57	Ring fastener, external, size 25, Tru-Arc	106A308U01	6
58			
59			
60	Roll pin, 3/32" x 1/2"	107A011U0l	6
61	Roll pin, 1/16" x 1/2"	107A004U01	6
62	Groove Pin, 1/16" x 3/8"	107B025U01	6
63	Groove Pin, 1/16" x 1/2"	107B026U01	6
64	Groove Pin, 1/8" x 3/8"	107B031U01	6

51. Standard Procedure for Removing and Rethreading the Tape on the Fischer & Porter Precipitation Gage.

A new photoelectric reader for precipitation recorder tapes was installed at the National Climatological Center at Asheville, NC., in 1971. It is considerably faster than the mechanical reader previously used; however, a few changes are necessary in the procedure for removing and rethreading the tape on the gage. ELTEC's and SNS's who perform this operation on the Fischer & Porter gages should follow this procedure:

1. Remove the tape on the first day of a new month, or as soon there after as possible. Do not change tape near the end of the month. Mail the tape promptly in the container provided to the RSMS. (Eastern Region personnel should mail the tape directly to the NCC.)

2. Identify each tape with station name; station number, date, and time. Indicate whether daylight or standard time is in use. This information should be entered on the beginning of the tape, the end of the tape, and on each mailing can. Identify the month by abbreviation rather than "figures". NCC reports that frequent errors are made when the month is indicated by figures.

3. Draw a line across the tape along the top of the punch block when a tape is started and again just before the tape is removed. A soft marker, such as a felt-tipped pen, should be used to avoid damage to the tape.

4. Leave about 20 inches of blank tape at the beginning and at the end of a record to allow for identification space and for threading the tape on the reader at the NCC. If stick-on identification labels are used, place them on blank tape and not over punched data.

5. Lead punches, and a manual punch at the end of the record, are no longer required for operation of the photoelectric reader. New gages do not have an "80" punch, and this feature is being removed from some of the older gages. Therefore, the requirement for eight, or more, manual punches at the beginning of a tape is terminated. However, lead punches do not interfere with processing of the record, and the manual punch may be used to bring the tape to the correct time in the punch block. While a manual punch at the end of a record is not required for the processor, it should still be made as an assurance against loss of record. It is important to draw a line across the tape at the top of the punch block at the beginning and end of a record (Step 3) since most gages no longer differentiate between a punch initiated manually and those made for record.

6. Adjust the feed pawl, if necessary, in accordance with instructions on Page 10 of the Maintenance Manual EHB-10-206 . The punched holes need not be centered on the time lines of the tape, but they must at least intersect the lines to assure proper translation.

52. Glycerin as a Gasket Lubricant.

The Fischer & Porter Company recommends the use of a small amount of glycerin on the rubber gaskets of the precipitation gage to prevent sticking. The gasket on the front of the binary-decimal transmitter units (BDT's) can also be treated in the same manner.

53. Universal Rain Gage Replacement Parts.

Although many of the Universal weighing rain gages in the FC-1 program have been replaced by Fischer & Porter precipitation gages, there is no intention of phasing them out in the general Weather Service program. The gages were reclassified last year from capital property (object code 3119) to expendable property (object code 2629) at the Central Logistics Supply Center.

Recently, replacement weighing mechanisms for the Universal gages were placed into CLSC stock. Weather Service stock numbers, Federal stock numbers, and descriptions of these mechanisms are as follows:

1. D110-15 (FSN 6685-998-0000-X) Replacement weighing mechanism, complete, for 12-inch dual traverse precipitation gage.

2. D110A-1 (FSN 6685-998-0001 -X) Replacement weighing mechanism, complete, for 6-inch single traverse precipitation gage.

3. D110B-1 (FSN 6685-998-0002-X) Replacement weighing mechanism, complete, for 2.4-inch single traverse precipitation gage.

SMALL PARTS KIT FOR FISCHER &, PORTER PRECIPITATION GAGE

Bag No.	Description	F&P Number	Quantity
65			
66			
67			
68			
69			
70	Bushing, shaft	368A022B11	4
71	Bushing, Ergas Timer	368G096Q83	4
72	Washer, fiber	377A122P22	4
73	Washer, Teflon	377A147P30	4
74	Washer, Ergas Timer	377A188R60	4
75	Clamp, circuit board	391D068T12	4
76	Punch	402B014T60	4
77	Spring, punch arm	424A145S13	4
78	Spring, tension, lower pawl	424B016T10	4
79	Spring, tension, rocker arm	424B026S13	4
80	Spring, torsion, locking lever	424C024S31	4
81	Flexure, horizontal	424K047N41	4
82	Flexure, vertical	424K048N41	4
83	Cable Assembly, mechanical drive	667A379X99	2

U.S. DEPARTMENT OF COMMERCE
National Oceanic and Atmospheric Administration
NATIONAL WEATHER SERVICE
Silver Spring, Md. 20910

Date: December 14, 1972

Reply to Attn of: W514

Subject: Transmittal Memorandum for Engineering Handbook No. 10, Issuance 72-4

To: All Regional Headquarters, Area Electronic Supervisors, Electronics Technicians and Substation Network Specialists (SNS)

1. Material Transmitted:

Engineering Handbook No. 10, Hydrologic Equipment, Section 2.1; Maintenance Note No. 54, Punch Pressure Measurement of Fischer & Porter Precipitation and River Gages,

2. Summary:

Maintenance Note No. 54 announces CLSC stocking of a spring tension scale to measure gage punch pressure, and presents instructions for its use.

3. Effect on Other Instructions:

None,

J. A. Cunningham
Chief, Engineering Division

HYDROLOGIC GAGING SYSTEM MAINTENANCE NOTES
(For Electronics Technicians & Substation Network Specialists)

54. Punch Pressure Measurement of Fischer & Porter Precipitation and River Gages.

Spring tension scales have been placed into CLSC stock for use by ELTEC's and Substation Network Specialists in measuring the punch pressure of Fischer & Porter gages. Both precipitation and river gages can be checked with these scales.

The spring tension scale provides a positive means of directly reading the gage punch pressure and adjusting the gage to its most efficient pressure. The Fischer & Porter company recommends 9 to 10 pounds.

The usual method of checking punch pressure is to loosen the punch arm spring tension until the punches fail to penetrate the tape, then increase punch pressure until the gage produces clean punches. The punch tension spring nut is tightened an additional 1-1/2 turns past this point to insure reliable punching. When the punch pressure is too great, an extra load is placed on the driving motor, and the motor may stall under unfavorable conditions such as low battery voltage, cold weather, etc. If the punch pressure is too light, an erroneous record may be produced,

The scale can be requisitioned from the Central Logistics Supply Center under the following stock number and description:

D111-TE501 (FSN 6670-172-3316)	Scale, Chatillon Model 1N-15, capacity 15 pounds, in 4-02. increments; for measuring punch spring tension

Two #10-32 x 5/8" screws and two #10 nuts are packed with the first 100 scales placed into stock. One screw and one nut are installed on each F&P gage to provide an anchoring point for the scale hook. The screw and nut are to remain on the gage. Future scale purchases will not include the screws and nuts, since they are available from the Fischer & Porter Precipitation Gage Small Parts Kit. (See Hydrologic Gaging System Maintenance Note No. 50.) If they are to be purchased locally, be sure that they are made of stainless steel.

Instructions for Using the Chatillon Model 1N-15 Spring Tension Scale on the Fischer & Porter Gage

NOTE: In the following procedure, Steps 1 and 2 need be performed only once for each gage. (Refer to Figure 1 attached, for parts location .)

1. Remove the front #10-32 x 3/8" screw, lock washer, and flat washer from the adjustable follower. Do not loosen the rear screw or disturb the cam follower adjustment.

2. Replace the front screw with a #10-32 x 5/8" stainless steel screw and #10 nut. Use the flat washer and lock washer removed in Step 1. Leave about 1/4" of the threaded portion of the screw protruding to serve as a post for the scale hook. Tighten the lock nut. NOTE: This screw should remain in place after it is installed.

3. With the manual punch switch, rotate the program shaft until the punchout cam is in the position shown in the drawing, just before punchout. Shut off the punch motor.

4. Insert a small piece of paper between the punchout cam and adjustable follower.

5. Hook the Chatillon scale on the protruding screw and read the tension required to allow the paper to begin to slip from its position. This should be 9 to 10 pounds. Tighten the punch force adjust nut to increase tension and loosen it to decrease tension. Replace the punch force spring if more than six threads are exposed behind the nut when the proper tension is obtained.

Attachment: Figure 1

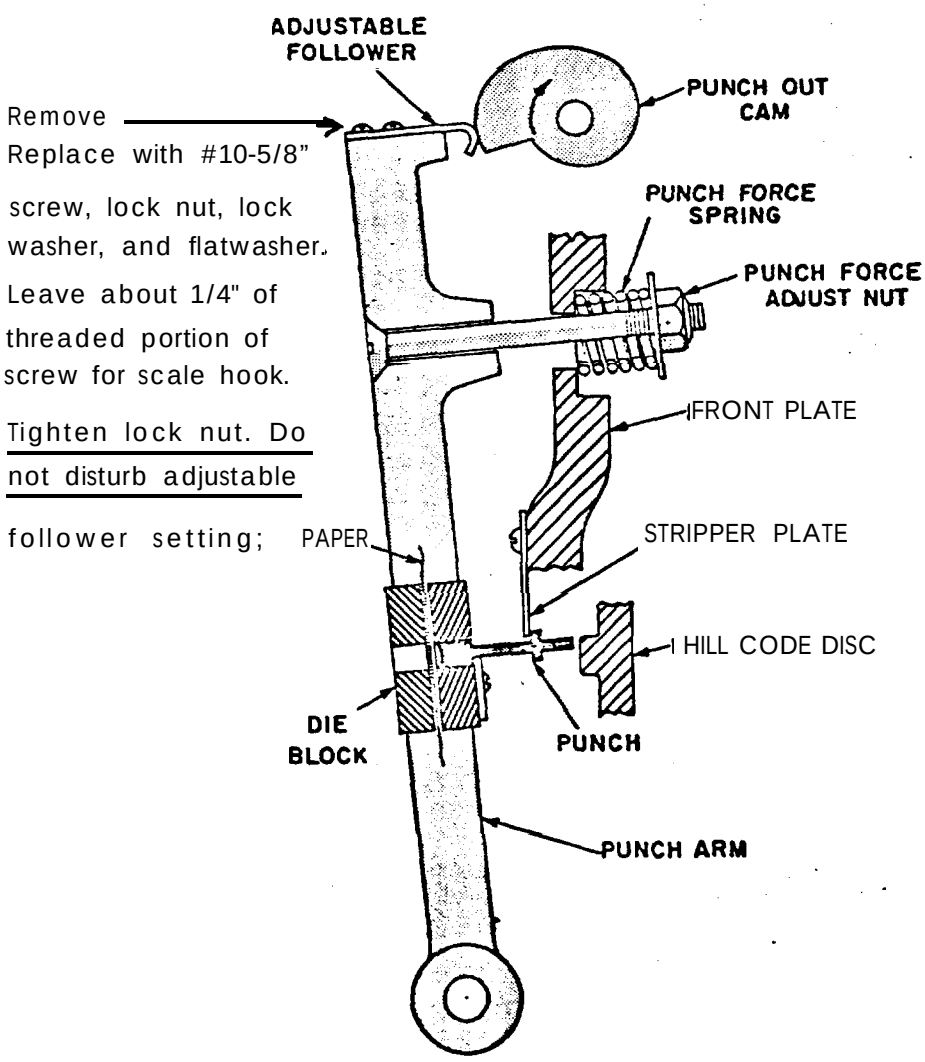

FIGURE 1

Fischer & Porter Punch Arm Parts Diagram

U.S. DEPARTMENT OF COMMERCE
National Oceanic and Atmospheric Administration
NATIONAL WEATHER SERVICE
Silver Spring, Md. 20910

Date: November 6, 1973

Reply to Attn of: W514

Subject: Transmittal Memorandum for Engineering Handbook No. 10, Issuance 73-4

To: All Regional Headquarters, Area Electronic Supervisors, Electronics Technicians and Substation Network Specialists

1. Material Transmitted:

Engineering Handbook No, 10- Hydrologic Equipment, Section 2.1; Maintenance Notes No. 55, Defective Fischer & Porter Punched Tape, and No. 56, Fischer & Porter Precipitation Gage Telemetering Kits.

2. Summary:

Maintenance Note No, 55 advises ELTEC's and SNS's of the presence in the field of punched tape printed with time line variations and to avoid making corrective adjustments if they encounter the defective tape.

Maintenance Note No. 56 announces the stocking at CLSC of telemetering kits for the Fischer & Porter precipitation gage. Installation Instructions are furnished with the kits.

3. Effect on Other Instructions:

None.

J. A. Cunningham
Chief, Engineering Division

EHB-10
Issuance 73-4

HYDROLOGIC GAGING SYSTEM MAINTENANCE NOTES
(For Electronics Technicians & Substation Network Specialists)

55. Defective Fischer & Porter Punched Tape.

We have been advised that some precipitation gage punched. tape in use has the clock time lines irregularly spaced. The spacing variations are small and in both directions, fast and slow, so that the total time error may be small over a period of several months. The problem has been discussed with the Fischer & Porter Company and is expected to be cleared up shortly. However, if an ELTEC or SNS encounters this problem and attempts to correct punch misalignment with lower pawl adjustments, he may be in for a period of frustration.

If a punch misalignment (with respect to time) becomes evident on a previously normal gage, the ELTEC or SNS should check back on the tape for variations of spacing and, if these are present, ignore the problem. If punch misalignment occurs after mechanical work has been done on the gage, however, corrective adjustments should be made.

56. Fischer & Porter Precipitation Gage Telemetering Kits.

Telemetering kits for Fischer & Porter precipitation gages are in stock at the Central Logistics Supply Center, Kansas City, MO., and can be ordered under NWS Stock Number D111-MS901 (FSN 6850-904-0001-X). NOTE: These kits provide telemetering capability for nontelemetering precipitation gages such as the A2 series 1558 and 1559 gages used in the FC-1 network. They cannot be used in ADR river gages!

The kits include installation instructions prepared by the Fischer & Porter Company which, for the most part, are complete and easy to follow. The instructions are oriented toward the Model 35B1558 and 35B1559 gages; however, they apply equally well to the 1558 and 1559A1 and A2 seriesgages. When these gages are involved, the wiring harness between TB1 and TB2 should be connected as shown on Figure 1, attached. Estimated installation time is about 3 man-hours.

Several errors appear in Steps 11 and 12 of the instruction which may cause some confusion. In Step 11, the words “low order” should be deleted, and the word “pointer” should be replaced with the words "tape guide." In Step 12, the entire last sentence "Check the pointer position for accuracy and tighten the screw" should be deleted. In Step 15, first sentence, change "them" to "it," since there is only one code disk on the gage. When performing Steps 18 and 19, code checks, switch the punch motor off at punchout to freeze the contacts for continuity checks.

Attachment

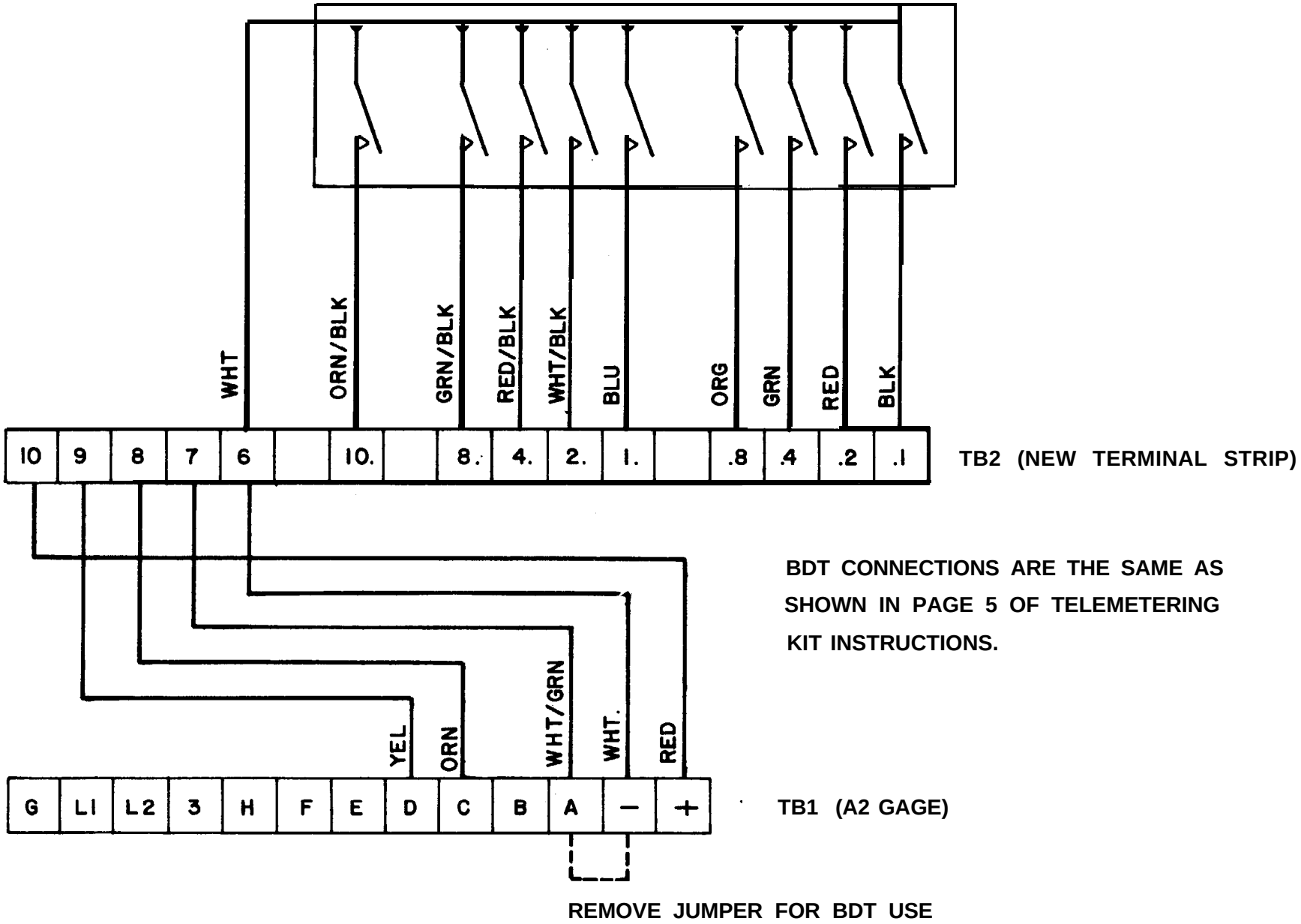

TELEMETERING CONNECTIONS FOR FISCHER & PORTER A2 DIGITAL PRECIPITATION GAGE

FIGURE I

UNITED STATES DEPARTMENT OF COMMERCE
National Oceanic and Atmospheric Administration
NATIONAL WEATHER SERVICE
Silver Spring, Md. 20910

June 14, 1978

W514

TO: All Regional Headquarters, Electronic Program Officers, Electronics Technicians, and Substation Network Specialists

FROM: J. M. St. Clair
Chief, Engineering Division

SUBJECT: Transmittal Memorandum for Engineering Handbook No. 10 Issuance 78- 5

1. Material Transmitted:

Engineering Handbook No. 10, Hydrologic Equipment, Section 2.1; Maintenance Note No. 63, Tools for Clearing Jammed Tape on Fischer & Porter Gages.

2. Summary:

Maintenance Note No. 63 discusses tape jamming problems and offers suggestions on fabrication by the technician of an effective clearing tool from material commonly available.

3. Effect on Other Instructions:

None

EHB-10
Issuance 78- 5

Engineering Division
W514

May 23, 1978

HYDROLOGIC GAGING SYSTEM MAINTENANCE NOTES
(For Electronics Technicians and Substation Network Specialists)

63. Tools for Clearing Jammed Tape on Fischer & Porter Gages.

Tape jamming on Fischer & Porter gages, either precipitation or river level types, is not a very prevalent condition, occurring mostly during periods of high humidity. However, when it occurs, it can be very exasperating to the technician. If not prepared, he usually searches the area for a likely piece of thin metal, wire; thin cardboard, or perhaps even a credit card, which can be inserted into the punch slot, in an attempt to remove the jammed paper.

Several suggestions have been received from field technicians proposing that a suitable jammed tape clearing tool be established as a stock item. We feel this is not necessary since several effective tools can be obtained or fabricated locally. The point is to have one on hand when needed.

A contact burnisher about 3" long and .010" thick can be made into a good tool by filing several teeth on one edge of the burnisher. This will give it a sawing action when used in the .010" to .012" gap of the punch assembly.

A more easily procured item used by many field technicians is the common Presto or Presstonic attachable prong paper fastener found in every office. The prongs can be easily filed to give a sawtooth shape and, with several layers of electrical tape wrapped around it to form a handle, it can become a very effective tool.

When tape jamming occurs it is necessary to determine if any mechanical malfunction or misadjustment is involved in the problem. The technician can obtain much valuable information on Fischer & Porter gage punch action and its problems from the Fischer & Porter Maintenance Bulletin 35-9009 (EHB10-206) available from the CLSC Publications Section.

UNITED STATES DEPARTMENT OF COMMERCE
National Oceanic and Atmospheric Administration
NATIONAL WEATHER SERVICE
Silver Spring, Md. 20910

August 24, 1982 OA/W5141 - CM

TO: All NWS Regional Headquarters, Area Electronics Supervisors, Electronics Technicians, and Cooperative Program Managers (EHB-10 Distribution)

FROM: OA/W51 - J. Michael St.Clair

SUBJECT: Transmittal Memorandum for Engineering Handbook No. 10, Issuance No. 82-3

1. Material Transmitted:

Engineering Handbook No. 10 - Hydrologic Equipment, Section 2.1; Hydrologic Gaging Maintenance Note No. 67: Instructions for Installation of Solid State Timer Model III.

2. Summary:

Maintenance Note No. 67 provides instructions for installation of Solid State Timer Model III in Fischer & Porter Precipitation Gages.

3. Effect on Other Instructions:

A pen-and-ink change is required to Modification No. 4, Engineering Handbook No. 10, Section 3.1.

Engineering Division
OA/W514

HYDROLOGIC GAGING SYSTEM MAINTENANCE NOTES
(For Electronics Technicians)

67. Instructions for Installation of Solid State Timer Model III.

We are presently using several different types of timers in the Fischer & Porter Precipitation Gage. In order to stock a single timer, we have selected a standard unit. This timer (Solid State Timer Model III) and its mounting bracket are available at NLSC. The timer's NWS Stock No. is D111-M200 and the mounting bracket's NWS Stock No.is D111-MP200SP1. This new mounting bracket attaches to the gage with the existing hardware. You should requisition this timer as the existing timers fail.

If the gage is a model covered by Modification No. 4, EHB-10, Section 3.1, that modification should be completed before installing this timer.

One of the attached figures will apply to your equipment. Identify the correct figure and install the timer as indicated. The Model III Timer has a fourth (green) wire that is connected as indicated.

On each of the figures attached to Modification Note No. 4, Engineering Handbook No. 10, Section 3.1, the following note should be added:

"See Maintenance Note No. 67, Engineering Handbook No. 10, Section 2.1"

Attachments

Figure 1 - Modified F&P Model 1548 Gage 1559A2 with Solid State Timer.
Figure 2 - Modified F&P Model 1559A1 Gage and F&P Model 1559A2 Gage with Solid State Timer.
Figure 3 - F&P Model T559B1 Gage with Solid State Timer.
Figure 4 - F&P Model 1559C1 Gage with Solid State Timer.

TB2 (NEW TELEMETERING KITS) SEE NOTE 4

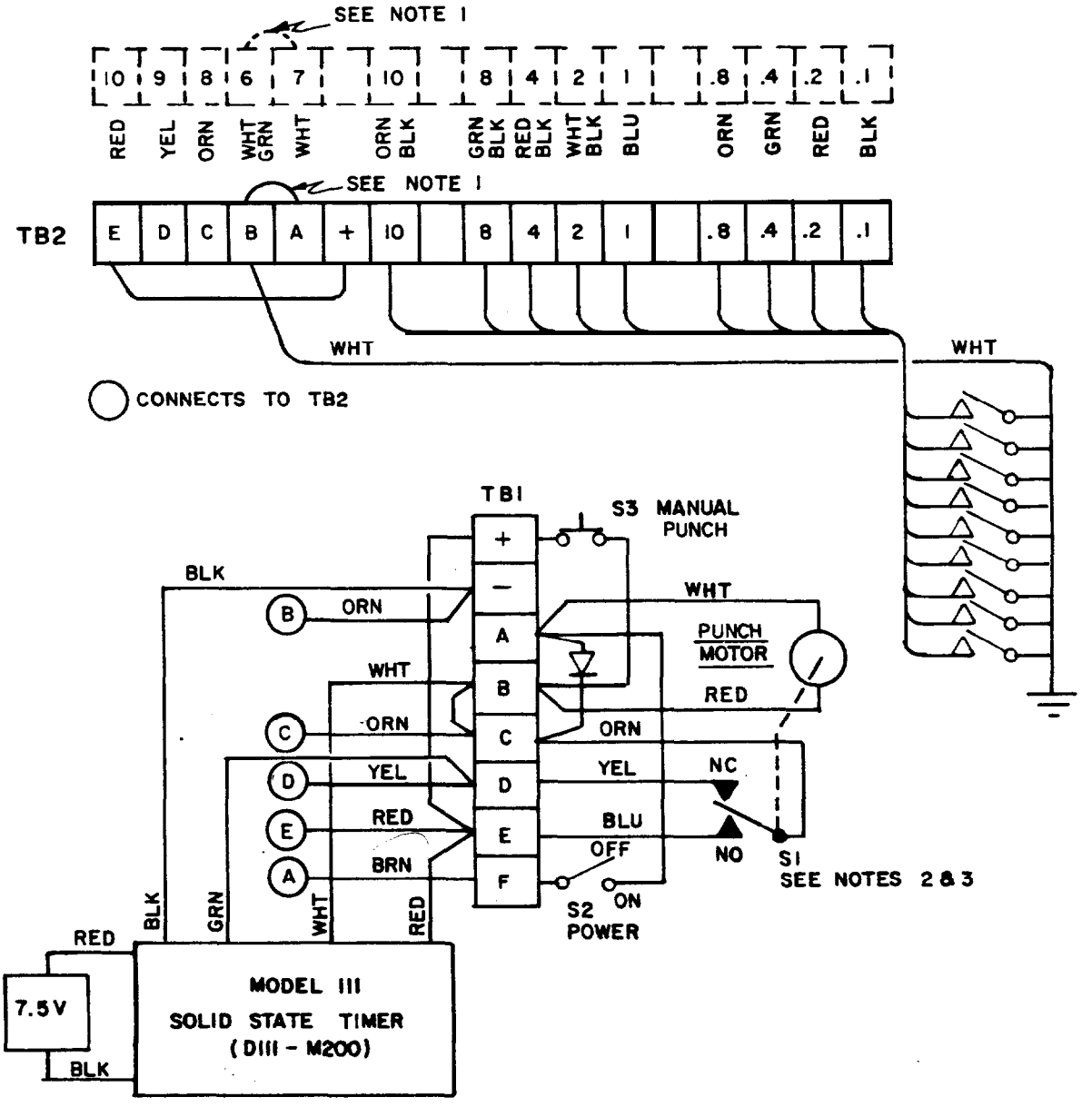

NOTES

1. REMOVE JUMPER WHEN BDT IS USED.
2. S1 SHOWN AT END OF PUNCH CYCLE.
3. S1 CAN BE EITHER OLD TYPE LEAF SWITCH (ONLY 1 SECTION USED) OR NEW D111 - A151A MICROSWITCH AND BRACKET ASSEMBLY. COLOR CODE OF LEADS IS THE SAME.
4. IF NEW TELEMETERING KIT (D111-MS901) IS INSTALLED USE TB2 (DOTTED LINES) TB2-6 & 7 SHOWN REVERSED TO AGREE WITH OLD TB2-B & A.

FIGURE - I

MODIFIED F&P MODEL 1548 GAGE 1559A2 WITH SOLID STATE TIMER

TB2 (NEW TELEMETERING KITS) SEE NOTE 4

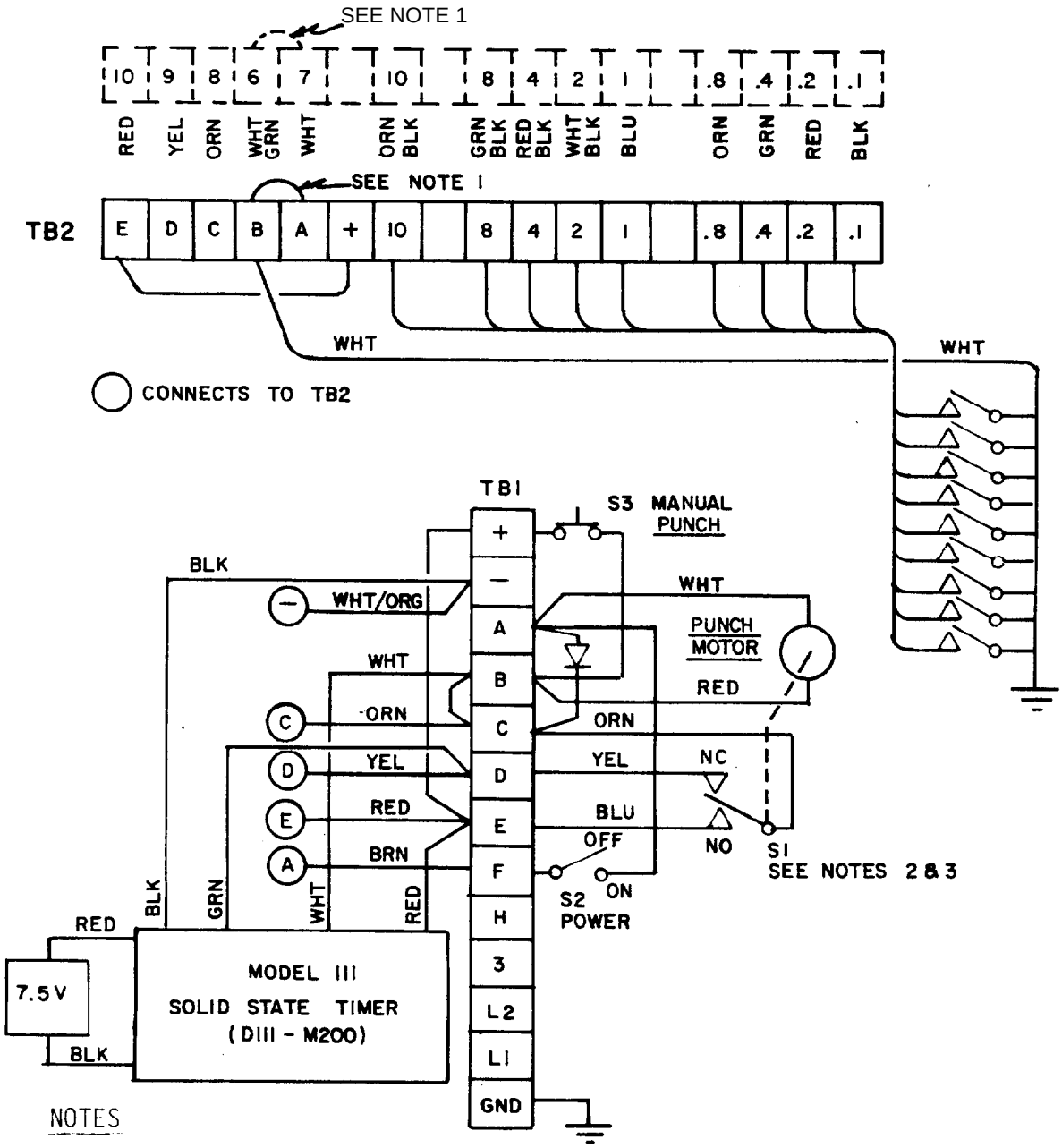

NOTES

1. REMOVE JUMPER WHEN BDT IS USED.
2. S1 SHOWN AT END OF PUNCH CYCLE.
3. S1 CAN BE EITHER OLD TYPE LEAF SWITCH (ONLY 1 SECTION USED) OR NEW D111-A151A MICROSWITCH AND BRACKET ASSEMBLY. COLOR CODE OF LEADS IS THE SAME.
4. IF NEW TELEMETERING KIT (D111-M901) IS INSTALLED USE TB2 (DOTTED LINES) TB2-6 & 7 SHOWN REVERSED TO AGREE WITH OLD TB2-B & A.

FIGURE- 2

MODIFIED F & P MODEL I559A1 GAGE AND F & P MODEL 1359A2 GAGE WITH SOLID STATE TIMER

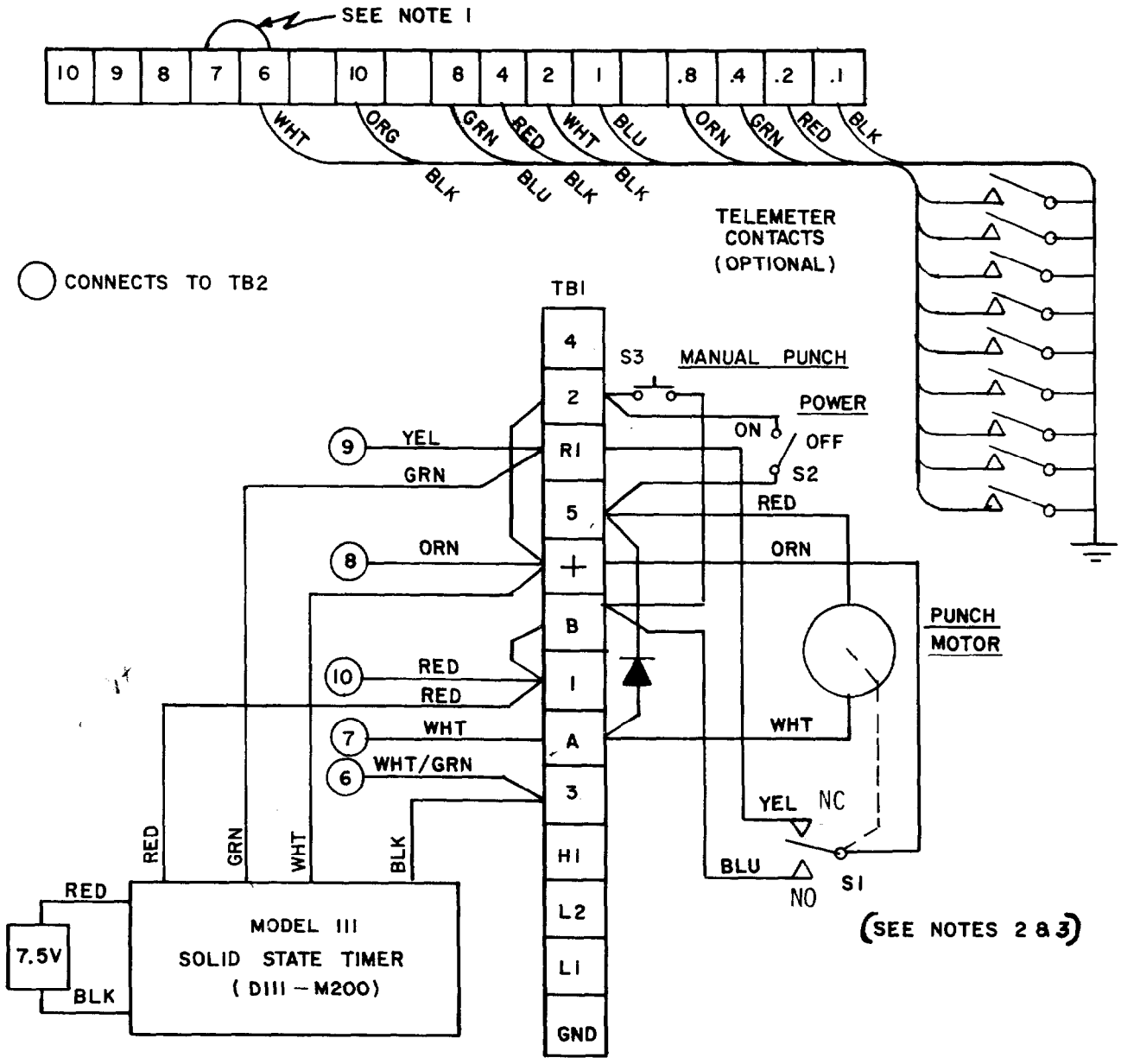

NOTES:

1. REMOVE JUMPER WHEN BDT IS USED.
2. SI SHOWN AT END OF PUNCH CYCLE.
3. SI CAN BE EITHER OLD TYPE LEAF SWITCH (ONLY 1 SECTION USED) OR NEW D111-A157A MICROSWITCH AND BRACKET ASSEMBLY COLOR CODE OF LEADS IS THE SAME.

FIGURE - 3

F & P Model 1559B1 Gage with Solid State Timer.

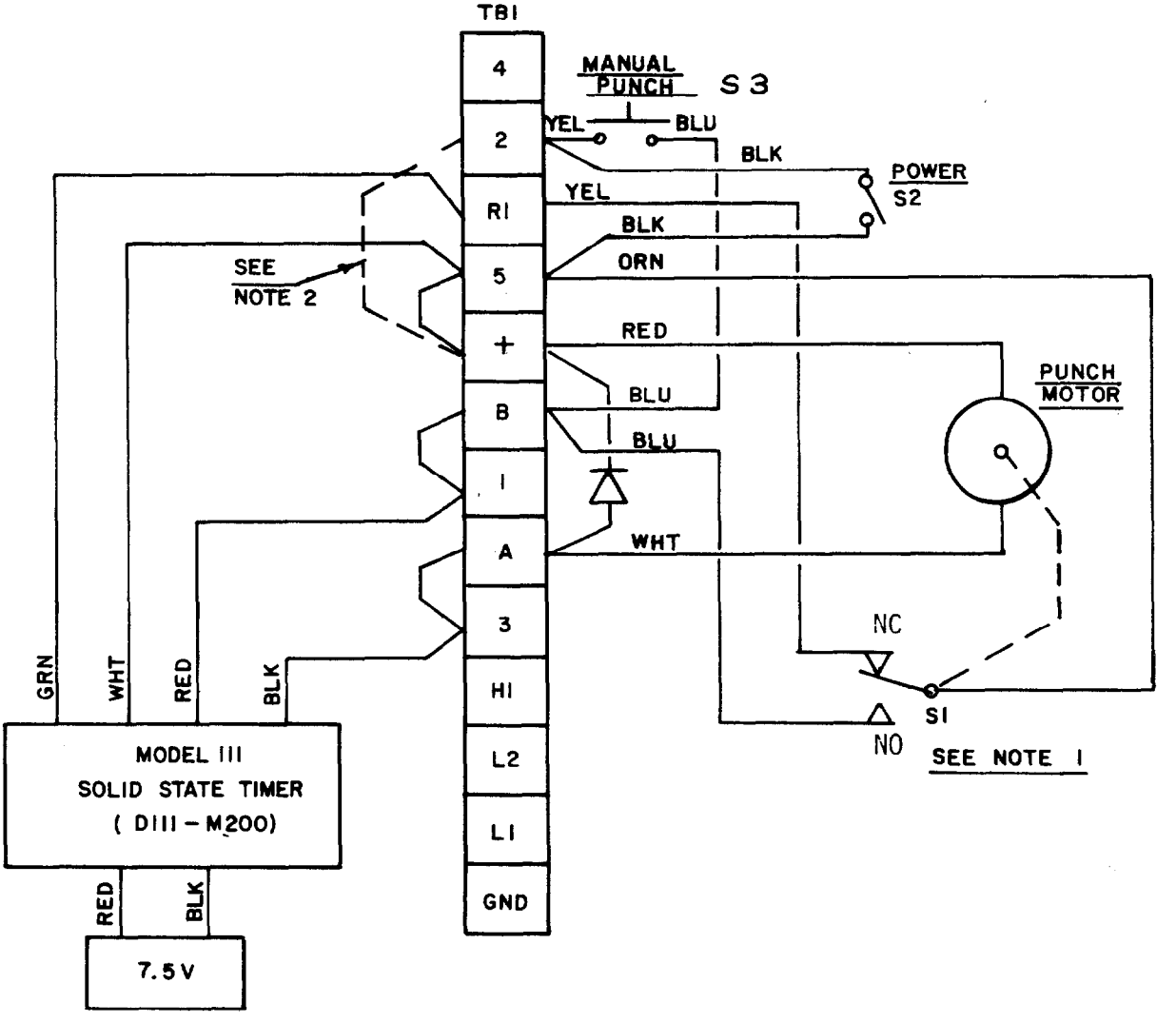

NOTES: 1. S1 Shown at end of punch cycle.
2. F & P gages with serial Nos. 7909A0840M1 Thru 8103A1005M60 will have a jumper from (+) to (5) on TB1. Remove this jumper and place a new jumper from (+) to (2).

FIGURE-4

F & P Model 1559C1 Gage With Solid State Timer

HYDROLOGIC GAGING ERRATA SHEET 1 (for Electronics Technicians)
Engineering Division
W/OSO321:BGM

Replacement Wiring Diagram for Maintenance Note 67

GENERAL

The purpose of this errata sheet is to standardize the wiring diagram for all National Weather Service timers used on Fischer & Porter precipitation gauges. This errata sheet provides one diagram that replaces the four figures in Hydrologic Gaging Maintenance Note 67: Instructions for Installation of Solid State Timer Model III, issued August 24, 1982.

PROCEDURE

Remove figures 1 through 4 in Maintenance Note 67 and replace with the wiring diagram provided with this errata sheet.

EFFECT ON OTHER INSTRUCTIONS

Replacement of wiring diagrams in EHB-10, Section 2.1, Hydrologic Gaging Maintenance Note 67.

J. Michael St. Clair
Chief, Engineering Division

Attachments

F/P WIRING DIAGRAM FOR NWS SOLID STATE TIMER

DIAGRAM FOR F&P MODEL 1559 GAUGES

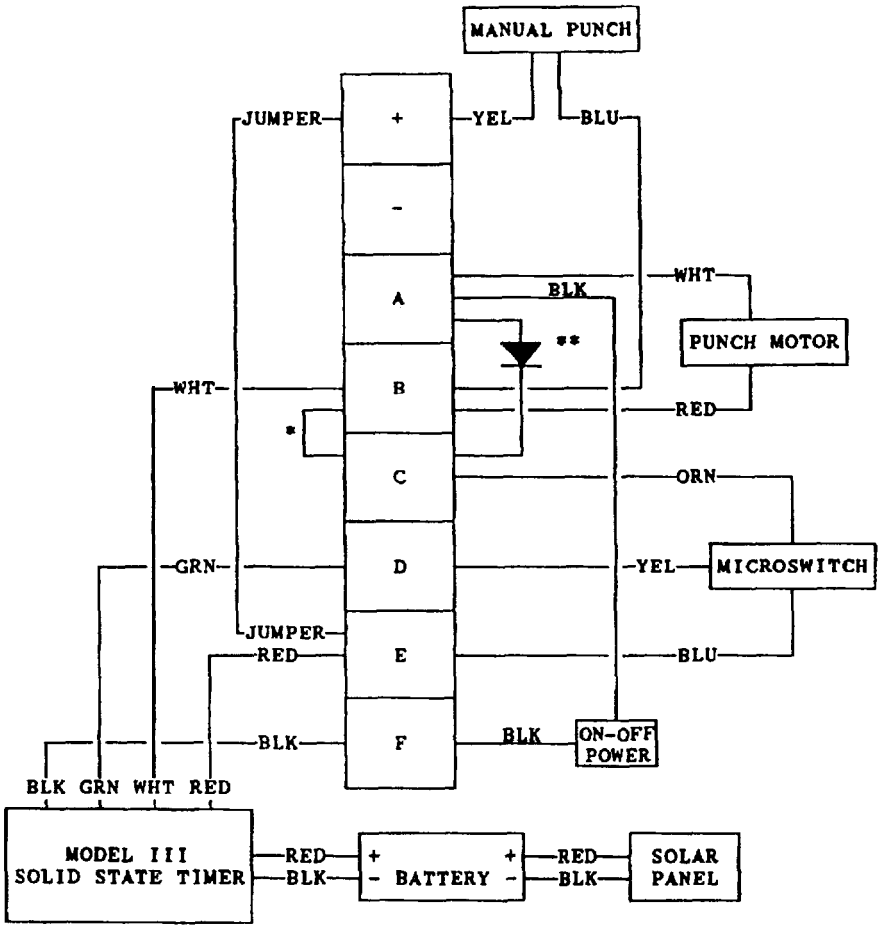

FOR MARK III & IV TIMERS
BLACK = F RED = E YELLOW = B

NOTES:
1. * METAL JUMPER
2. ** BLOCKING DIODE
3. NWS SOLID STATE TIMER MAY HAVE A BROWN WIRE. IF SO, USE IT AS THE BLACK WIRE.
4. THE MANUAL PUNCH BUTTON MAY HAVE THE SAME COLOR WIRES. IF SO, IT DOESN'T MATTER WHICH WIRES GO TO + AND B.

Maintenance Note 68 (for Electronics Technicians)
Engineering Division
W/OS0321:BGM

Weighing Rain Gauge Hood to Lower Case Assembly Compatibility

General

1. We have been advised that the Fischer & Porter (F&P) hood would not fit properly onto some lower case assemblies manufactured by Belfort. This problem was discussed with the Belfort Company by NWS engineers. Apparently, the lower case assembly lock hasp spacing that holds the roll at the bottom of the hood was not held to the dimensions called for on the manufacturer's drawing. This spacing variation was confirmed after measuring several of the older F&P lower case assemblies for bracket spacing and hood roll fit. Belfort, however, meets the required dimensions for spacing the lock hasp and the hood roll.

2. Effect on Other Instructions: None

Procedure

This maintenance note is to inform the electronics technician and the cooperative program manager that only an F&P hood should be used with an F&P lower case assembly, and a Belfort-manufactured hood should be used with a Belfort lower case assembly. If there is a problem with an F&P gauge, both the Belfort hood and lower case assembly should be ordered as replacements. Only Belfort parts are stocked at the National Logistics Supply Center, as F&P no longer manufactures the weighing rain gauge.

The F&P hood is identified by a large metal ring insert with a sharp edge. The lower case assembly is identified by a nameplate bearing F&P as the manufacturer. The Belfort hood is identified by a metal ring riveted inside the top of the hood opening. The lower case assembly has a nameplate that identifies its manufacturer as Belfort.

J. Michael St. Clair
Chief, Engineering Division

MAINTENANCE NOTE 69 (for Electronics Technicians)
Engineering Division
W/OSO321:BGM

Elimination of the Telemark (TMK) and Binary-Decimal Transmitter (BDT)

1. General

The purpose of this maintenance note is to inform all National Weather Service stations who maintain the TMK and BDT that logistic support for these two systems will no longer be available. All parts that support the TMK and BDT will be deleted from Engineering Handbook 1, Section "D" on January 31, 1990.

2. Effect on Other Instructions

All maintenance and modification notes, calibration procedures, indexes, and drawings will become obsolete effective January 31, 1990.

Procedure

The goal of the Limited Automatic Remote Collector (LARC) program was to eliminate the TMK, BDT and the device for Automatic Remote Data Collection (DARDC), and replace this equipment with one efficient system that could be logistically supported and maintained.

Dispose of all TMK and BDT systems per regional property management procedures. Report the deactivation of equipment removed and installation of the LARC replacement equipment on WS Form H-28. All DARDC parts, however, are to be returned to the National Reconditioning Center.

The program office requests that stations still requiring LARC equipment for replacing only the TMK or BDT call Bob McCormick at FTS 427-7835. This is the final call for LARC replacement of the TMK and BDT equipment.

J. Michael St. Clair
Chief, Engineering Division

MAINTENANCE NOTE 70 (for Electronics Technicians)
Engineering Division
W/OS0321:BGM

Calibration Procedure for the 12-Inch Tipping Bucket Rain Gauge

General:

1. This maintenance note provides calibration information for the 12-inch tipping bucket rain gauge.

2. Effects on Other Instructions: All calibration procedures pertaining to the 12-inch tipping bucket rain gauge are affected.

Procedure:

The following procedure is to be used when calibrating the 12-inch tipping bucket rain gauge.

Calibration Procedure for Tipping Bucket:

1. Remove the collector assembly from the tipping bucket and place a level across the gauge. Check for level before starting the calibration.

2. The inside of each chamber should be wet as in normal operation.

3. Use the D120-TE1 pipette to calibrate the 12-inch tipping bucket rain gauge.

   a. Fill the pipette with water until the pipette level reads zero.

   b. Release water from the pipette into one of the tipper chambers until it tips.

   C. Record the amount of water released from the pipette.

   d. Refill the pipette to the zero level.

   e. Release water from the pipette into the other chamber until it tips and record the amount of water released from the pipette.

   f. Sum the two pipette readings of water released from the pipette.

   g. The sum of water required to tip both chambers should be 37.0 milliliters +/-2 percent for a range of 36.3 to 37.7 milliliters.

Mathematical Explanation for the Above Calibration Procedure:

Determine volume of water in milliliters required to tip the tipping bucket for the 12-inch rain gauge.

Example:

$$V = \pi r^2 h$$

$$V = \pi \ (6 \times 25.4)^2 \ 0.01 \times 25.4$$

$$V = 18{,}533.3 \text{ cubic millimeters}$$

Since there are 1,000 cubic millimeters in one milliliter

$$V = \frac{18{,}533.3}{1{,}000} = 18.5 \text{ milliliters per tip}$$

Calibration:

Two consecutive tips = 2 x 18.5 = 37.0 milliliters for two tips

Two percent accuracy required

Acceptable range is therefore:

37.0 - 2% x 37.0 = 36.3 milliliters
37.0 = 37.0 milliliters
37.0 + 2% x 37.0 = 37.7 milliliters

J. Michael St. Clair
Chief, Engineering Division

ERRATA SHEET NO 1 (for Electronics Technicians)
Engineering Division
W/OS0321:BGM

Pen-and-Ink Change to Maintenance Note 70 Dated February 12, 1992

General

This errata sheet provides a pen-and-ink change to maintenance note 70, section 2.1, titled "Power Requirements for Weighing Precipitation Gauge", dated February 12, 1992.

Procedure

Change the maintenance note number from 70 to 71.

Effect on Other Instructions

None.

J.Michael St. Clair
Chief,Engineering Division

Power Requirement for Weighing Precipitation Gauge

General

1. The national cooperative program manager requested that Engineering look into a problem associated with EHB-10, section 3.1, modification note 6. That modification replaced the "hot shot" carbon battery with a rechargeable battery and solar panel. The reason for the replacement was battery degradation and cost. With the implementation of this modification some problems developed. Investigation of the problems in the field combined with testing at the Engineering Test and Evaluation Branch led to the following actions to resolve the battery and solar panel problems.

Place a diode in the solar panel circuit to prevent discharging through the panel.

Change from an 8-volt to a 6-volt battery (ASN D111-A153BT1).

Replace high current F&P Solid State Timers (MK-IV) with NWS Solid State Timer Model III (ASN D111-2M200, NSN 6660-00-162-8119). The timers were implemented on all National Weather Service F&P gauges by the Engineering Division.

Find a replacement for the model 804H solar panel as it is no longer manufactured. A replacement solar panel (ASN D111-10) was implemented and documented in EHB-1.

2. Effect on Other Instructions: Make the following pen and ink changes to EHB-10, section 3.1, modification note 6.

Change battery part number from D111-A152BTl to D111-A153BTl.
Change battery charger part number from D111-A152-A5 to D111-153PS2.

Procedure

The battery should be fully charged before installation. If the battery is in question, charge it with a battery charger (ASN D111-153PS2 or equivalent).

1. For battery replacement, turn power switch to OFF. Remove the battery after noting the color code and other polarity markings of the connecting wires. Replace battery, noting the color markings and polarity markings are the same as when removed. Turn power switch to ON.

2. For solar panel replacement, turn power switch to OFF. Remove the attached solar cell. Before the replacement solar cell is attached, it may be necessary to reposition the equipment so the solar cell is on the South side in full sun.

3. The solar cell should be aligned facing the sun at noon. Mount the solar panel in a 45-degree position and move to vertical position if too much sun or too much snow covers the panel. Refer to the SA-2 wiring diagram for solar panel hook-up. Turn power switch ON.

4. Inspect all work and check the gauge for normal operation.

J. Michael St. Clair
Chief, Engineering Division

Attachment

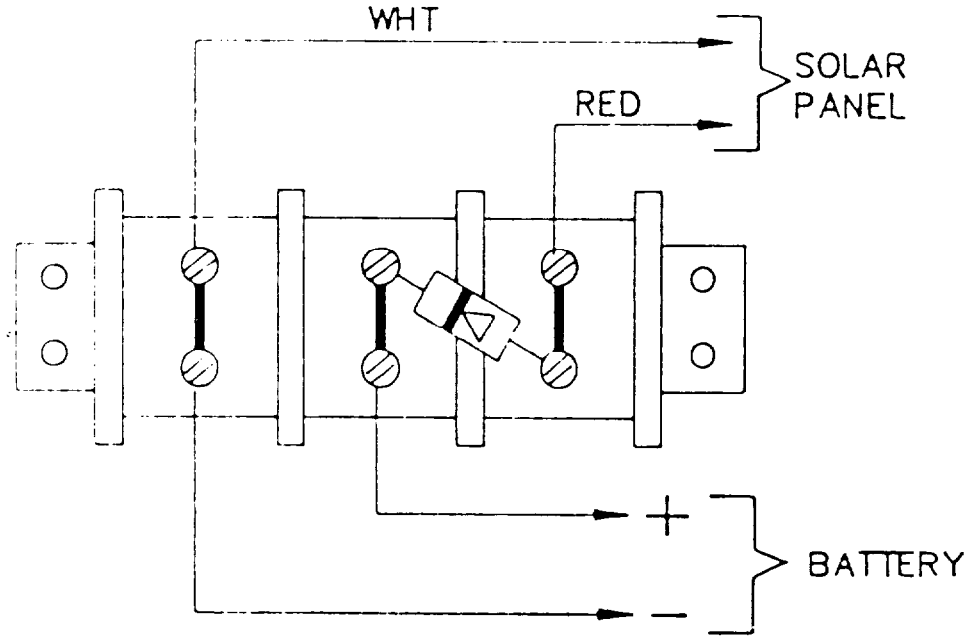

SA-2 WIRING DIAGRAM

MAINTENANCE NOTE INDEX - TIDE GAGING

Number	Date of Issue	Title

item 1 deleted

MAINTENANCE NOTE 1 (for Electronics Technicians)
Engineering Division
W/OSO321:BGM

Water-Level, Tide-Measuring System Consisting of a Tide Gauge Transmitter and a Tide Gauge Recorder

General

1. The purpose of this maintenance note is to inform all National Weather Service (NWS) stations that all parts (WSN D520) for the water-level, tide-measuring system will be deleted from Engineering Handbook 1, section D of the catalog on December 31, 1988.

2. Effect on Other Instructions: None.

Procedure

One of the goals of the Marine program was to eliminate the obsolete Bristol metameter tide gauge recorder and replace it with a more efficient system that could be logistically supported and maintained. The replacement system for the Bristol metameter tide gauge recorder is the (WSN D900T) Automatic Remote Collector system (ARC). All of the new ARC tide gauge systems were installed 2 years ago and have been working since.

The program office requests that NWS stations contact Bob McCormick, the Hydrologic Systems Program Leader (FTS 427-7835), if updates to tide gauge systems are required.

J. Michael St. Clair
Chief, Engineering Division

MAINTENANCE NOTE INDEX
AUTOMATIC HYDROLOGIC OBSERVING SYSTEM (AHOS)

Number	Date of Issue	Title
1	March 29, 1976	The AHOS Program
2	March 29, 1976	DARDC A8AA Instrument/Register Interface Cards
3	October 11, 1977	DARDC Master Initiate Pulse Too Short
4	March 6, 1978	Modified 1A8B Counter Card
5	March 6, 1978	Short Circuit Protection When 1A8B Card is Wired for Tipping Bucket Use
6	August 2, 1978	Corrected A8B Diagram
7	August 2, 1978	DARDC Relay Repeater Interface
8	April 12, 1979	DARDC Tipping Bucket Simulator
9	April 17, 1981	Repair and Replacement Procedures for Handar SMS/GOES Field Test Set
10	January 12, 1983	Direct Connection of Handar SMS/GOES Field Test Set
11	December 18, 1985	Firmware Replacement for the Automatic Remote Collector (ARC) Satellite System
12	December 19, 1985	Firmware Replacement for the Marine Tide Gage Systems
13	April 18, 1986	Installation of the Limited Automatic Remote Collector (LARC), Handar Model 550A Hydrologger.
14	September 9, 1986	Removal/Installation of the Model 436A Incremental Shaft Encoder Repair Kit P/N 436-6001

MAINTENANCE NOTE INDEX
AUTOMATIC HYDROLOGIC OBSERVING SYSTEM (AHOS)

Number	Date of Issue	Title
15A	June 24, 1987	Solar Panel Installation on the ARC System
16	August 23, 1986	Limited Automatic Remote Collector Programming Change and Upgrades
17	August 29, 1986	545A Programming Set and Firmware (REV 7.0)
18	March 11, 1987	Connection of a TI 707 RS232 Modem
19	November 25, 1987	Limited Automatic Remote Collector (LARC) Repair Philosophy After Failure
20	August 8, 1988	Automatic Remote Collector (ARC) Correction to Drawing in the Operating and Service Manual
21	September 20, 1988	Automatic Remote Collector (ARC) Replacement Microprocessor Card for the ARC Satellite RAMOS/S System
22	October 3, 1988	Limited Automatic Remote Collector (LARC) Handar Firmware Revision 2.8
23	April 28, 1989	Hydrologic and Surface Lightning Protection Device Upgrade
24	August 29, 1990	Replacement LARC System for DARDC Equipment
25	December 23, 1991	Addition of Microprocessor Board for Automatic Remote Collector (ARC)
26	July 8, 1993	Programming the Automatic Remote Collector (ARC) for Random Transmission
27	March 5, 1997	LARC Interface Device Technical Information Package

Item 15 deleted

U.S. DEPARTMENT OF COMMERCE
National Oceanic and Atmospheric Administration
NATIONAL WEATHER SERVICE
Silver Spring, Md. 20910

May 24, 1976

REF: W514

SUBJECT: Transmittal Memorandum for Engineering Handbook No. 10, Issuance 76-3

TO : All Regional Headquarters, Electronic Program Officers, Electronics Technicians, and Substation Network Specialists

1. Material Transmitted:

Engineering Handbook No. 10, Hydrologic Equipment, Section 2.3; Automatic Hydrologic Observing System (AHOS) Maintenance Notes No. 1, The AHOS Program, and No. 2, DARDC A8AA Instrument Register/ Interface Cards.

2. Summary:

Maintenance Note No. 1 gives an overall updated picture of the entire AHOS Program from a maintenance viewpoint. Note No. 2 presents technical and maintenance information on the A8AA Instrument Register/ Interface Card. These maintenance notes will cover the AHOS/T (Telephone) and the AHOS/S (Satellite) Programs.

3. Effect on Other Instructions:

This the first of a new series of Hydrologic Equipment Maintenance Notes and will be listed in Engineering Handbook No. 10, Table of Contents as Section 2.3, AHOS, Page 12. The existing Section 2.3 Meteorological Radar Transponder (MRT-2) is hereby deleted, and the related maintenance note should be destroyed. Existing Section 3.3, Modification Notes, and Section 4.5, MRT-2 Equipment Maintenance Schedule, are also deleted, and related information is to be destroyed.

A revised EHB-10 Table of Contents is attached to this transmittal memorandum to replace the one in the front of the Handbook.

J. M. St. Clair
Chief, Engineering Division

AMERICAN REVOLUTION BICENTENNIAL 1776-1976

AHOS MAINTENANCE NOTES
(For Electronics Techniciansand Substation Network Specialists)

1. The AHOS Program. This is the first of a series of AHOS Maintenance Notes which will furnish pertinent information on AHOS/T and AHOS/S Systems as it becomes available. The AHOS/T (Telephone) program is now well established and is rapidly settling down to a point where components and installations are becoming standardized. The revised DARDC Technical Information Package dated March 14, 1975, recently distributed to all Electronics Technicians and SNS's, provides necessary installation and maintenance information for the AHOS/T. Additional copies of this package are available from CLSC.

AHOS/S (Satellite) installation procedures are being standardized, and these instructions will be furnished for regional engineering divisions shortly. However, basic changes in the composition (from 11-bit ASCII to 8-bit ASCII) of the digital information transmitted have forced redesign of the DARDC interface and the radio transmitter. Technical information in this area, therefore, has been delayed until the changes have been finalized. An AHOS/S Technical Information Package similar to the DARDC package will then be distributed.

The A8AA Instrument Register/Interface Card has replaced the A8A card and is now the only BCD sensor interface card available from CLSC stock. The first batch of A8AA cards had two resistors placed in the wrong position by the manufacturer which resulted in unsatisfactory operation. Most of those cards have been recalled and forwarded to the factory for modification. We believe that shortly none of those cards will be left in the field.

Many A8A cards are still in use in DARDC's and are performing satisfactorily. They should not be replaced unless they are faulty. One of the problems of the A8A card, high idle current, is not now critical if a solar panel is installed. It is expected that the use of solar panels may eliminate the need for routine changing and charging of the Gel-Cells.

A new type of Gel-Cell battery charger, called the Minicharger, has been distributed to the field and placed in CLSC stock. The Minicharger is less expensive than the Dorsett charger, but is just as effective. It contains a two-position switch, which enables the technician to charge the Gel-Cell at a moderately heavy rate (750 ma.) or at a slow rate (float charge). On "float charge" the battery can remain on charge indefinitely. An indicating lamp extinguishes when the battery is 80% charged (50% on float setting). The battery state of charge can be estimated by the brilliance of the lamp. The Weather Service stock number of the charger is B701-10.

There are two types of solar panels in use with DARDC systems, the Spectrolab Model LEMC (WS S/N P550), and the Solarex (WS S/N P551). The Spectrolab panel, approximately 36" long and 3" wide, cannot be economically repaired and should be discarded locally if it becomes defective. The Solarex model,approximately 10"x12", can be repaired and should be returned to QC&IRB when defective. In some instances, such as where a diode is defective, field repair by the ELTEC can restore the panel to operation quickly. A circuit diagram of the Solarex panel is attached to this note for information purposes.

AHOS systems presently use three types of Hydrologic gages as sensors, the Fischer & Porter punched paper tape precipitation recorder, the Fischer & Porter punched paper tape (ADR) river gage and the D120 tipping bucket precipitation gage. Both Fischer & Porter gages use the A8AA card as the DARDC interface while the tipping bucket uses the A8B counter card. Another sensor, the Leupold & Stevens Model 7000 punched paper tape (ADR) river gage with an "A" type telemetering module,will be put into service in the near future as a replacement for Telemark river gages. The "A" type telemetering module consists of magnetically latched reed switches (memory type) and will require an A8AA card slightly modified (CR33 connection changed from P1-4 to P1-2) as the DARDC interface.

Test equipment for the AHOS/T consists of a DARDC Test Set and a DARDC BCD Simulator. For the AHOS/S a Data Collection Platform Radio Test Set (DCPRTS) is required in addition to the DARDC Test Set and BCD Simulator. The DCPRTS is used for GO-NO-GO operational check of the GOES radio, while the DARDC Test Set will check out the DARDC interface and the Fischer & Porter sensors.

The first DARDC Test Sets (about twenty-one) were originally equipped with Light Emitting Diodes (LED's) for digital readouts. In bright sunlight they were difficult to read, therefore, later sets use small incandescent lamps which are much easier to see. The test set, by means of pre-set thumbwheel switches, can display four bits of any four consecutive characters of the DARDC message. Additional bits of each character can then be inspected by means of a pushbutton step switch. Another feature of the test set, useful in troubleshooting, is its ability to display directly the output of the Fischer & Porter gage telemetering contacts. Replacement LED's are in CLSC stock under WS S/N 017S-0SL6L. Incandescent replacements carry WS S/N 017-L-2-7382.

DARDC BCD Simulators are an important part of the DARDC maintenance program. By setting the four thumbwheel switches to a predetermined number and pressing the load pushbutton for at least 3 seconds, the technician can enter the number into the DARDC system just as if a Fischer & Porter gage were connected to the DARDC. Thus the system can be checked on the workbench without going to a gage site. An ON -OFF switch on the simulator, when in the OFF position, causes a question mark to appear after the DARDC message on a terminal printer. This is a check on the DARDC trouble detector A6 card. The trouble detector feature is not now used, but probably will be in the future.

Although viewed as a maintenance tool, the simulator can also be used as a manual input device by an observer at the gage site, or perhaps at a substation. This is not being done at this time, but the capability is there.

Early model simulators are housed in grey sloping metal boxes with four-digit thumbwheel switches, a pushbutton loading switch, and an ON-OFF trouble test switch. Later model simulators are similarly wired and have the same type of switches as the early ones, but have black and white cases and detachable cables. The cable feeds into the DARDC translator from the right, and may interfere with the translator battery cable when used in the J4 position. This can be rectified by removing the right-angle plastic connector shell, carefully twisting the connector 180° and replacing the shell. The cable leads are stranded and strong; however, to relieve the strain and allow the leads to shift, the cable binding tape should be removed and the jacket slit for about one-half inch. This area will be protected when the shell is replaced. A wiring diagram representative of both simulator models is attached for information.

The original manuals for the DARDC system were supplied by the Dorsett Electronics Division of LaBarge, Inc., manufacturers of DARDC, and are contained in the red binder No. 7-803, entitled "Instruction Manual for Device for Automatic Remote Data Collection (DARDC)." The supply is now exhausted and replacement manuals are on order from Dustin Associates, Inc., Santa Ana, California. These manuals will be issued from the CLSC, Kansas City, with the same red binders and will carry the 7-803 number; however, they will be entitled "Device for Automatic Remote Data Collection (DARDC) Model B." They will be available in about six months. These manuals are the FOMMS type (Functionally Oriented Maintenance Manual) and present a new concept of maintenance information for the ELTEC. The new manuals include information on DARDC Wind and Temperature Cards, and also the new 8-bit GOES DARDC Interface. A small number of incomplete DARDC FOMMS manuals has been distributed to regional head-quarters and to CLSC for emergency interim use. These interim manuals will be disposed of when the complete manuals become available.

DARDC components that are defective, and not easily repairable, should be returned to the QC&IRB at Kansas City, Mo. The muff speaker used in the coupler is the same as that used in the Model DC-102A Novation Coupler. Replacement units are available from the CLSC under the Weather Service stock number B035-LS2 (FSN 5965-00-158-9555). Replacement microphones for the coupler will soon be available from the CLSC, Weather Service stock number B701-2-1. Both of these components can be easily replaced in the field. The coupler muffs are made of a type of rubber to which glue does notadhere easily. We suggest that if one becomes loose in its socket, black electrical tape may be used to fasten it.

DARDC printed circuit cards are very difficult to repair because of their tough epoxy coating. The time consumed on a major repair can be considerable, and may not be economically acceptable for the program. However, in some instances an obvious

defect, perhaps a broken lead, cracked diode, burnt resistor, etc., can be easily repaired by the ELTEC and can result in the saving of time and money. For small repairs of this type we have no objection to the use of a recognized high-dielectric waterproof coating which may be locally available. An excel lent coil dope and an anti-fungus polystyrene spray are also available from CLSC.

The cost for contract repair of DARDC printed circuit cards is rising steeply, almost to the point where it is cheaper to throw the cards away than to repair them. For this reason, it is suggested that the ELTEC check a suspect card in another DARDC system to determine if it is defective before returning it to the repair center. We have experienced instances of interdependency of some DARDC cards where an apparently defective card in one system will work well in another.

Attachments: 1. Solarex Solar Panel Diagram (1 each)
11. BCD Simulator Wiring Diagram (1 each)

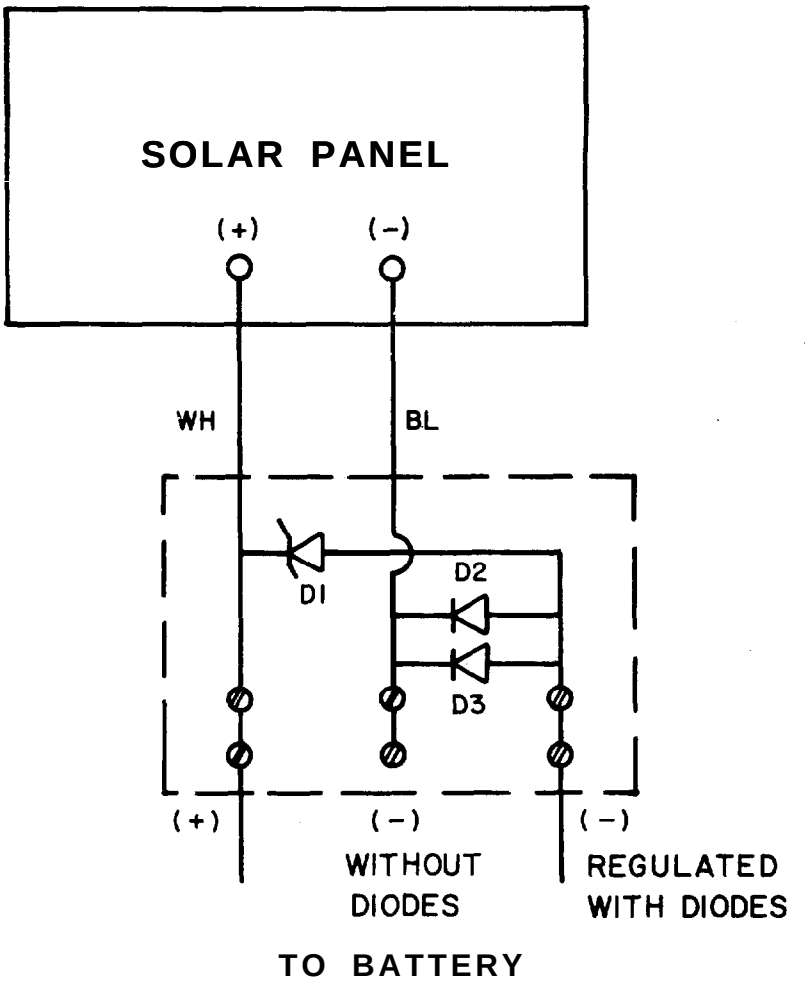

D1 IN 5351 ZENER DIODE WITH HEAT SINK

D2 IN 34A DIODE

D3 IN 34A DIODE

CHARGE CONTROL CIRCUIT DIAGRAM
14 VOLT, 3.5 WATT SOLAR PANEL
SOLAREX MODEL 435
WEATHER SERVICE STOCK NO. P551

ATTACHMENT #1

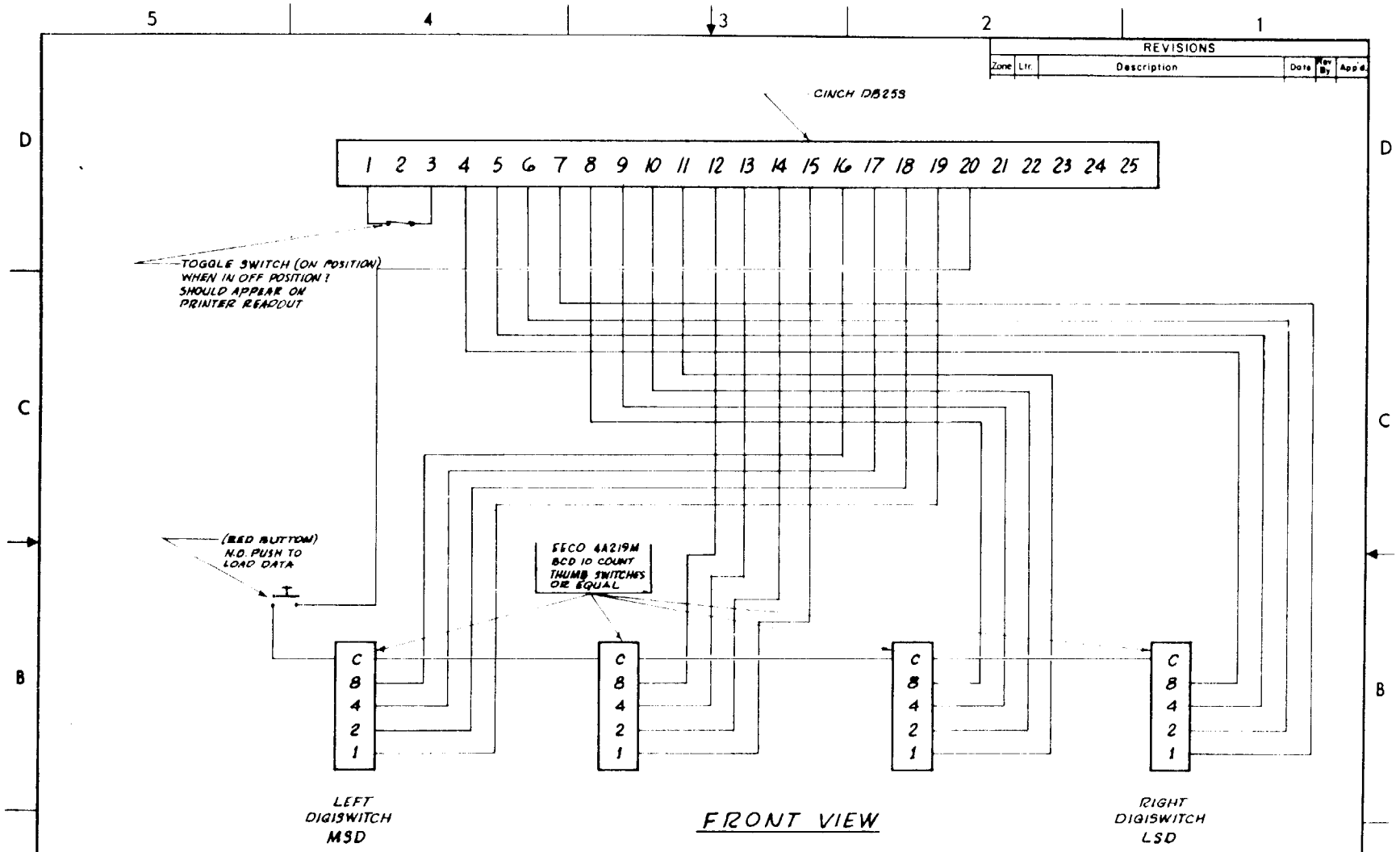

REVISIONS					
Zone	Ltr.	Description	Date	By	App'd.

UNLESS OTHERWISE SPECIFIED DIMENSIONS ARE IN INCHES
TOLERANCES: ANGLES ± 5°
3 PLACE DECIMALS ± .005
2 PLACE DECIMALS ± .01

ENGINEERING DIVISION
SILVER SPRING, MD. 20910

PREPARED R. BALMORIS
CHECKED
DESIGN
APPROVED BY
APPROVED BY

U.S. DEPARTMENT OF COMMERCE
NATIONAL OCEANIC & ATMOSPHERIC ADMINISTRATION
NATIONAL WEATHER SERVICE

DARDC BCD SIMULATOR
WS S/N B701-TS 902

SIZE C | DATE 3/19/76 | DRAWING NO BAE 901
SCALE | SHEET 2 OF 2 | FILE

ATTACHMENT II

2. DARDC A8AA Instrument Register/Interface Cards. The A8AA card is an improved version of the A8A, originally furnished with DARDC systems. The card remains on stand-by between DARDC interrogations in order to receive and store binary coded decimal (BCD) Information from the Fischer & Porter precipitation and river gages. This information is available only for a four-second period at gage punchout, which usually occurs every 15 or 30 minutes. The A8A card had three major problems which have been overcome by the design of the A8AA card. The improvements are listed below:

1) High idle current has been reduced by new latching-type integrated circuits.
2) A critical one-shot timing circuit used for resetting latching circuits in the A8A card during gage punchout has been replaced by two one-shot circuits, one for resetting (dumping old information), and the other for use as an inhibitor to prevent the first one-shot from again resetting during the gage punch cycle.
3) Sensitivity of the old A8A card to transients and noise pulses on the telemetering lines has been greatly reduced in the A8AA by the addition of capacitors and diodes to each of the sixteen telemetering inputs. Severe transients on very long lines during thunderstorms may still be a problem. We hope to be able to use transient protectors, such as TransZorbs, or relay repeaters to provide protection in the near future. Both of these avenues are being investigated. A description of A8AA operation, and a schematic diagram of the new A8AA card, are attached to this maintenance note.

Attachments: 1. A8AA Operation Description
11. A8AA Schematic Diagram

ATTACHMENT 1

Description of A8AA Operation

A8AA is the Fischer & Porter Precipitation/River Gage Interface for the DARDC. Data from the gage is encoded in binary coded decimal negative logic. During a punch cycle data lines representing a positive logic one are grounded: data lines representing a positive logic zero are open circuit.

Resistors R1 through R16 provide positive pullup for open circuit data lines. Capacitors Cl through Cl6 attenuate high frequency noise on the data lines. Diodes CR1 through CR16 in conjunction with zener diode CR36 provide overvoltage protection for the COS-MOS circuitry: diodes CR17 through CR32 in conjunction with diode CR35 provide undervoltage protection. In addition diodes CR17 through CR32 along with pullup resistor R18 form a 16-port AND gate.

When a data line is grounded the two one-shots U2 are triggered. The shorter duration one-shot provides a 400 ms. pulse as determined by R19 and C17. This 400 ms. pulse is used to reset all sixteen NAND latches U1, U3, U8, and U9. The longer duration one-shot provides a 4-second pulse as determined by R20 and C18. Neither one -shot may be retriggered until the longer pulse is over. This prevents a noisy data line from resetting the latches more than once during a gage punch.

At the end of the 400 ms. reset pulse grounded data lines set their respective latches to a logic one. Outputs of the latches become inputs to the shift registers U4, U5, and U7. For an explanation of the operation of the shift registers see A8 (Page 4-33, Paragraph 4-55 in old DARDC Manual).

Note that, should the load instrument enable pulse coincide with the 400 ms. reset pulse, all zeros will be loaded into the shift registers. The 400 ms. represents less than one-twentieth of one percent of the fifteen-minute punch interval.

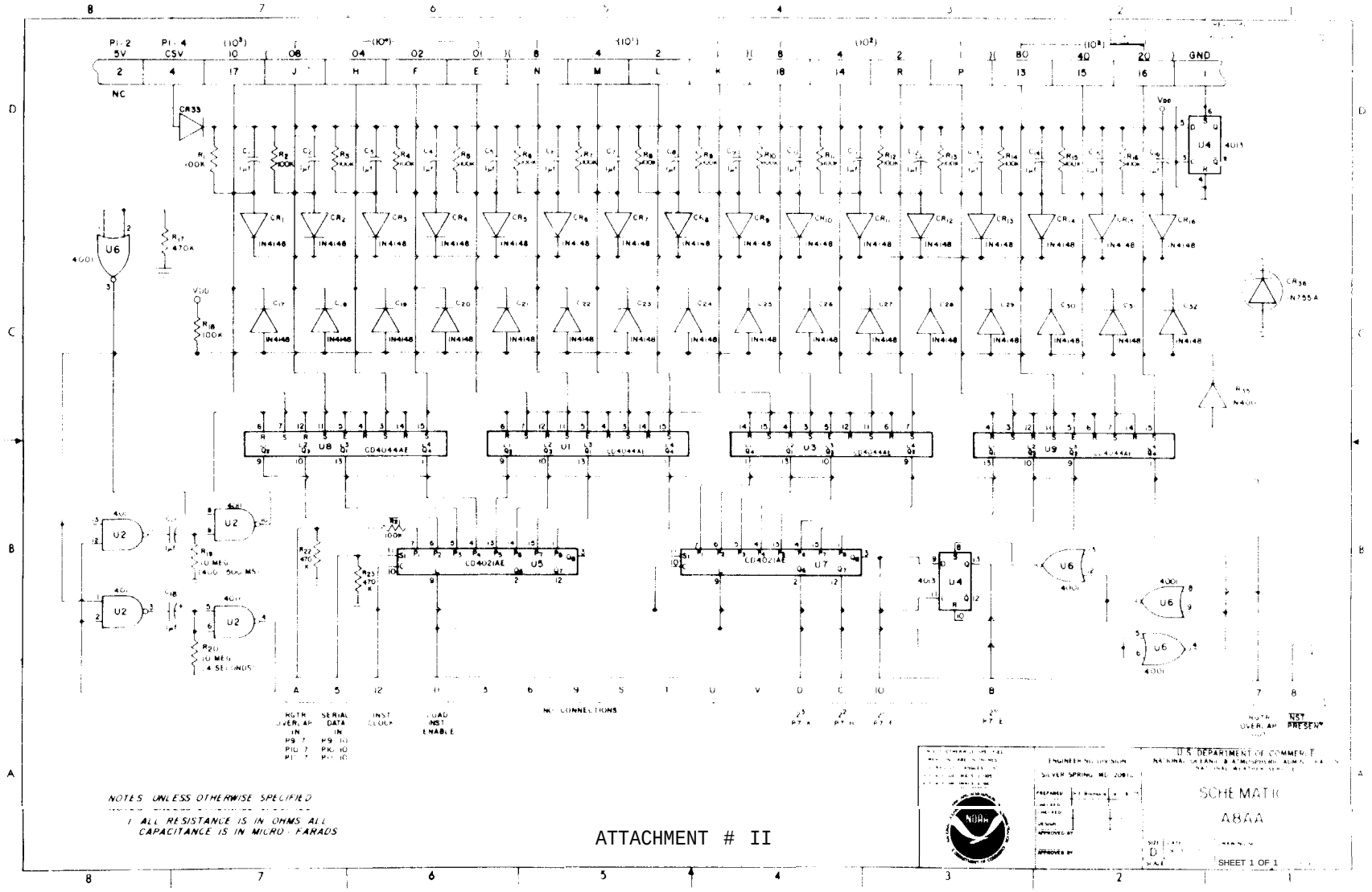

ATTACHMENT # II

U.S. DEPARTMENT OF COMMERCE
National Oceanic and Atmospheric Administration
NATIONAL WEATHER SERVICE
Silver Spring, Md. 20910

November 14, 1977

W514

TO: All Regional Headquarters, Electronic Program Officers, Electronics Technicians, and Substation Network Specialists

FROM: J. M. St. Clair
Chief, Engineering Division

SUBJECT: Transmittal Memorandum Engineering Handbook No. 10, Issuance 77- 6

1. Material Transmitted:

Engineering Handbook No. 10, Hydrologic Equipment, Section 2.3; Automatic Hydrologic Observing System (AHOS) Maintenance Note No. 3, DARDC Master Initiate Pulse Too Short.

2. Summary:

Maintenance Note No. 3 provides information to the Electronics Technician concerning a possible source of trouble when a DARDC System is used with a Novation coupler at the receiving end,

3. Effect on Other Instructions:

All 1A2 (Model B) Schematic drawings and parts lists should be changed to show that R7 is now a selected value instead of the fixed 2.2 megohm value. Directions are given in the maintenance note.

AHOS MAINTENANCE NOTES
(For Electronics Technicians)

3, DARDC Master Initiate Pulse Too Short, It has come to our attention that some Novation couplers are having difficulty with DARDC signals due to a short Master Initiate Pulse. The DARDC (Model B) FOMMS Manual describes the Master Initiate Pulse as a 4-second mark signal which delays the start of data transmission for that period of time. The Novation coupler has a built-in circuit which delays data reception for approximately a 3-second period, The correct combination of both delays should assure a complete DARDC message after a 1-second delay.

Some DARDC translators have been found to have Master Initiate Pulses as short as 2.6 seconds; this allows data transmission to start inside the Novation delay period, resulting in an incomplete readout. Also, some Novation couplers have been found to have a delay time in excess of 3 seconds which, when combined with a slightly shorter than normal Master Initiate Pulse, could give similar incorrect results.

The QC&IRB at Kansas City has set an acceptance target of 2.9 (nominal 3) seconds for the Novation coupler, New couplers should operate within this delay period. If not, they will be adjusted to conform. If your Novation coupler has a delay time exceeding 3 seconds, order a new one from CLSC and return the old one to QC&IRB for repair.

The short Master Initiate DARDC pulse is due to RC time constant variations in the 1-MMV-1 Monostable Multivibrator in the 1A2 Initiator Card (FOMMS Model B Manual Page 7-37). Resistor R7, listed as 2.2 megohms, is mounted on standoffs and can be easily changed by clipping it free and soldering in the proper value resistor. Be sure the terminals are clean and use a moistureproofing spray such as Krylon (NWS S/N 052-L-l) or equal for a protective coating after the resistor has been changed,,

QC&IRB at Kansas City has checked all the A2 cards in CLSC, including those held for AHOS Modification No. 1, and has brought them all up to the 4-second standard. They advise that resistor values ranging from 2.7 to 3.9 megohms (standard values 2.7, 3.3, 3.7, etc.) were used for R7 to lengthen the pulse to 4 seconds.

This is not a modification in the sense that all A2 cards must be checked and R7 resistors changed, but rather, an advisory to Electronics Technicians indicating a possible source of trouble in DARDC systems using Novation couplers at the receiving end. However, if a routine check indicates that the Master Initiate Pulse is significantly shorter than the 4-second target, change the resistor when it can conveniently be done, even if no Novation coupler is involved. In this way we will eventually eliminate all substandard cards from the AHOS DARDC program.

On all DARDC 1A2 (Model B) schematic diagrams on hand make a pen and ink change showing that R7 is a specially selected resistor in the range of 2.7 to 3.9 megohms (standard values). The 2.2 megohm designation should be deleted,, The 1A2 (Model B) schematic is contained in the Revised DARDC Technical Information Package, dated March 14, 1975, The 1A2 (Model B) schematic in the FOMMS DARDC Manual is located on Page 7-37 with R7 parts designation shown on Page 7-44,

U.S. DEPARTMENT OF COMMERCE
National Oceanic and Atmospheric Administration
NATIONAL WEATHER SERVICE
Silver Spring, Md, 20910

March 24, 1978

W514

TO: All Regional Headquarters, Electronic Program Officers, and Electronics Technicians

FROM: J. M. St. Clair
for Chief, Engineering Division

SUBJECT: Transmittal Memorandum for Engineering Handbook No. 10, Issuance 78- 2

1. Material Transmitted:

Engineering Handbook No. 10, Hydrologic Equipment, Section 2.3; Automatic Hydrologic Observing System (AHOS) Maintenance Note No. 4, Modified 1A8B Counter Card, and Maintenance Note No. 5, Short Circuit Protection when 1A8B Card is wired for Tipping Bucket Use.

2. Summary:

Maintenance Note No. 4 advises that Interrogation Counter Card 1A8B has been extensively modified by the manufacturer to overcome some operational problems. These cards have now taken the place of the old unmodified 1A8B cards in CLSC stock.

Maintenance Note No. 5 suggests the use of a 470-ohm resistor in series with the external source voltage output of the 1A8B Card when it is wired for use with a tipping bucket.

3. Effect on Other Instructions:

Attached Figure 1 replaces present 1A8B schematic. A revised 1A8B FOM Manual package is being prepared and will replace FOM Manual Pages 7-165 through 7-176 (EHB7-803 Model B), when available.

AHOS MAINTENANCE NOTES
(For Electronics Technicians)

4. Modified 1A8B Counter Card. The LaBarge Company is now producing a modified 1A8B Interrogation Counter Card which appears to clear up the difficulties presently encountered at some AHOS installations using this card. All of the 1A8B cards in CLSC stock are now of the modified type, and defective units returned to QC&IRB will be modified during their repair period, This will ensure that all CLSC-stocked 1A8B cards will be modified ones. The modifications to the card are quite extensive, involving resistor and capacitor additions, swaps, and value changes. Because field modification is not practical and because there are not a great many 1A8B cards in use, the CLSC approach (attrition) will be the best method of getting the unmodified cards out of the program.

Figure 1 attached, is a schematic diagram of the modified 1A8B. A revised 1A8B schematic diagram, parts list, and other 1A8B information for the FOM (DARDC Model B) Manual is being printed and will be distributed to manual holders when completed.

5. Short Circuit Protection When 1A8B Card is Wired for Tipping Bucket Use. When a tipping bucket is used with a DARDC Translator, standoff terminal E5 of the 1A8B card is connected to E4 and E6 to provide a voltage to the tipping bucket switch loop. An accidental short circuit of the tipping bucket line to ground can cause serious trouble for the DARDC Al card. In order to prevent damage to the DARDC Al card it is suggested that a 470-ohm, 1/2 watt resistor be inserted between E5 and E4 or E6. This will limit the short circuit current and at the same time will not interfere with tipping bucket counts to the A8B counter card.

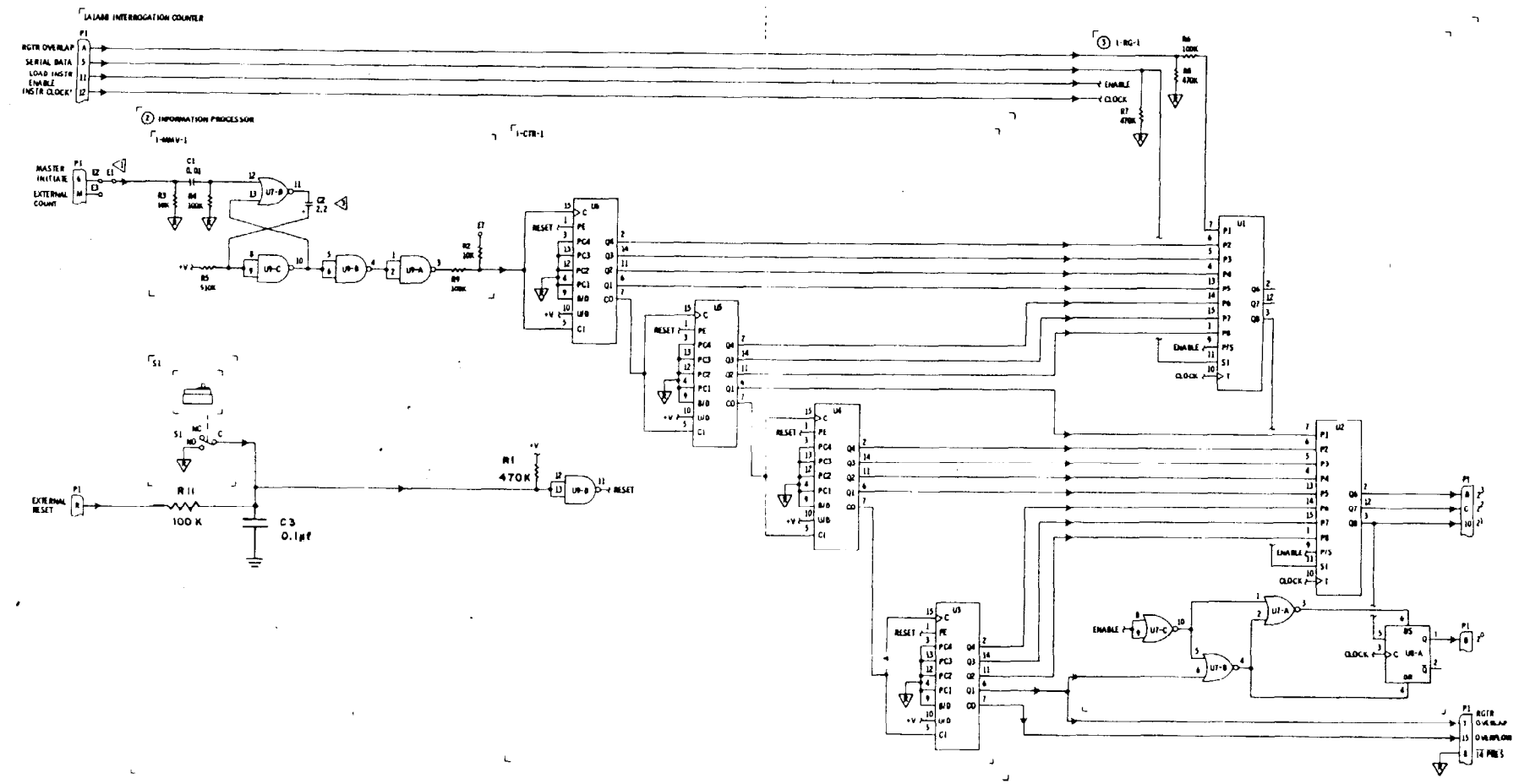

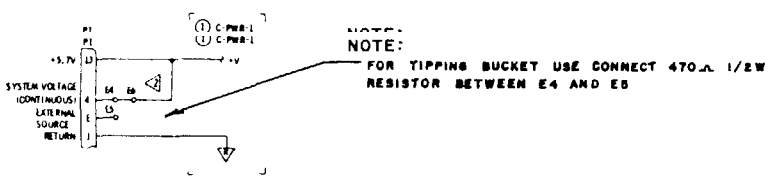

NOTE:
FOR TIPPING BUCKET USE CONNECT 470Ω 1/2W RESISTOR BETWEEN E4 AND E5

1A1A8B INTERROGATION COUNTER (MODIFIED)
REVISED 3/28/78

FIGURE I

UNITED STATES DEPARTMENT OF COMMERCE
National Oceanic and Atmospheric Administration
NATIONAL WEATHER SERVICE
Silver Spring, Md. 20910

August 25, 1978

W514

TO : All NWS Regional Headquarters, Area Electronic Supervisors, Transmittal Memorandum Substation Network Specialists

FROM : J. M. St. Clair
for Chief, Engineering Division

SUBJECT : Transmittal Memorandum for Engineering Handbook No. 10, Issuance 78- 6

1. Material Transmitted:

Engineering Handbook No. 10, Hydrologic Equipment, Section 2.3; Automatic Hydrologic Observing System (AHOS) Maintenance Note No. 6, Corrected A8B Diagram, and Maintenance Note No. 7 DARDC Relay Repeater Interface.

2. Summary:

Maintenance Note No. 6 furnishes a corrected 1A8B Interrogation Counter Schematic Diagram which replaces the one attached to AHOS Maintenance Note No. 4.

Maintenance Note No. 7 discusses a new DARDC Relay Repeater Interface unit available from the NWSH, Engineering Division, which has been used at some problem AHOS sites to clear up Fischer & Porter gage data line interference difficulties.

3. Effect on Other Instructions:

None.

EHB-10
Issuance 78- 6

Engineering Division August 2, 1978
W514

AHOS MAINTENANCE NOTES
(For Electronics Technicians)

6. Corrected A8B Diagram. The 1A8B Schematic Diagram, Figure 1 of AHOS Maintenance Note No. 4, contains an error in the Master Initiate portion of the drawing. Please discard the drawing and insert the attached Figure 1 (revised 4/19/78) in its place. The new card is the only 1A8B stocked at CLSC and indications are that it corrects most of the problems encountered with the tipping bucket and DARDC responder installation.

7. DARDC Relay Repeater Interface. A relay interface unit for DARDC responders has been developed and is available in limited quantities from the NWSH, Engineering Division for Fischer & Porter gage-equipped DARDC sites with interference problems. The unit contains sixteen small reed relays on one printed circuit card which is enclosed in an aluminum box terminated with two DARDC-compatible receptacles. A suitable cable furnished with the unit allows it to be inserted in series with the DARDC translator and the DARDC data input cable. (See attached Interconnection Diagram .)

The sixteen relays act as repeaters for the Fischer & Porter gage. At gage punchout each momentarily grounded telemetering contact operates its corresponding relay which in turn sets its corresponding latch on the DARDC 1A8AA card. The relay then opens when the gage contact is released. The DARDC input is, therefore, effectively isolated from the line and the gage telemetering contacts.

There are two methods of powering the relay box; (1) with the existing DARDC battery, and (2) with a separate 12-volt battery. The single battery method offers the cheapest installation but does not give complete line isolation - the DARDC translator common lead is connected to the Fischer & Porter gage ground through the battery negative terminal. Method No. 2 gives complete DARDC isolation provided the translator is kept floating - no external ground wires connected to the DARDC itself.

A separate 4.5 ampere-hour battery, fully charged, should provide well over six months of relay operation; a solar panel should not be necessary. However, it should be replaced with a charged battery during the technician's semiannual visit.

Several relay units have been in service for the past few months at DARDC stations with data input problems and have been operating successfully.

If you have a DARDC installation with problems due to interference in the Fischer & Porter telemetering lines, have your AES, through your regional headquarters, request a relay interface box from this office, W5141.

Attachments - 1 Revised Drawing
1 Diagram

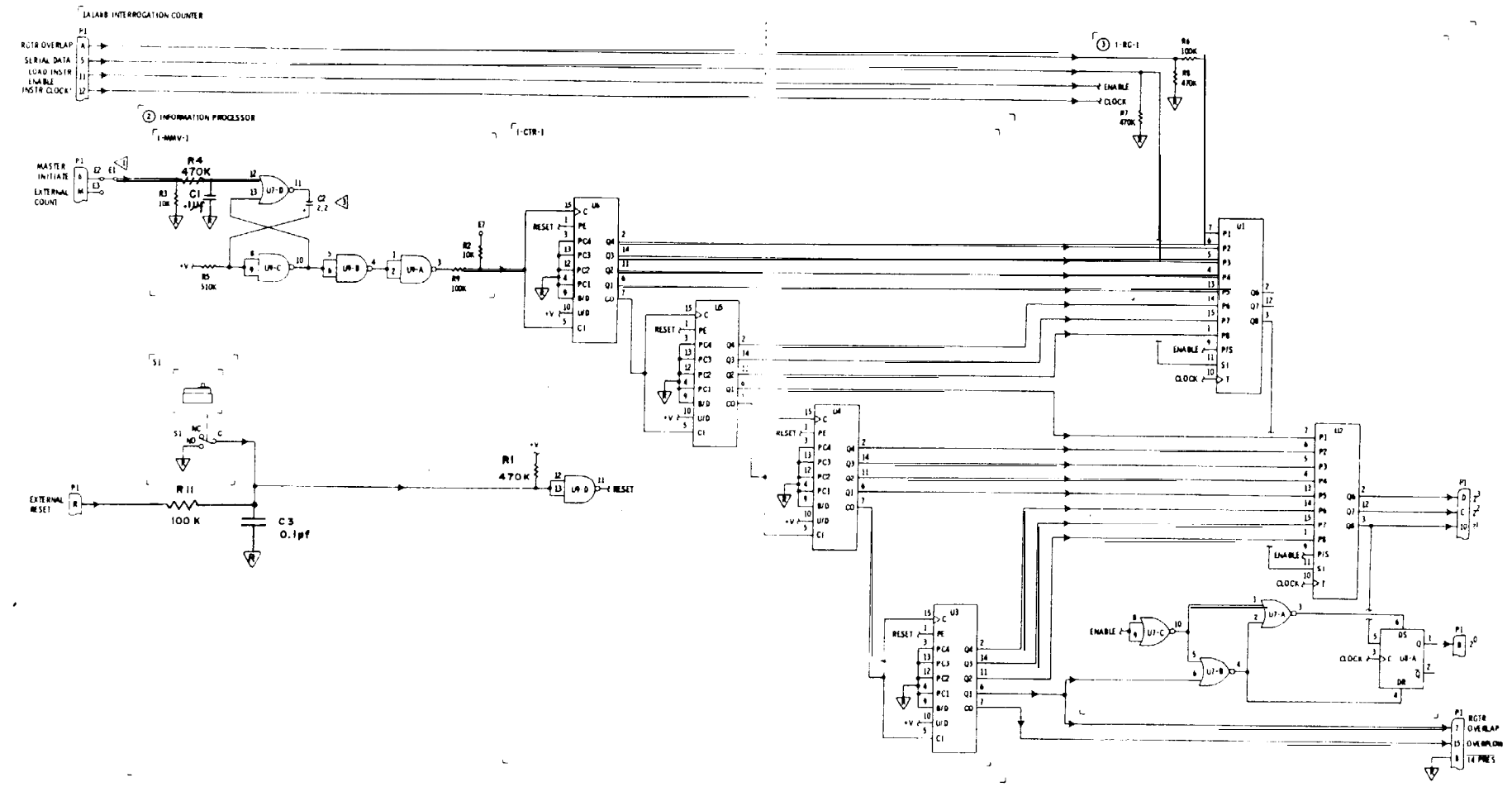

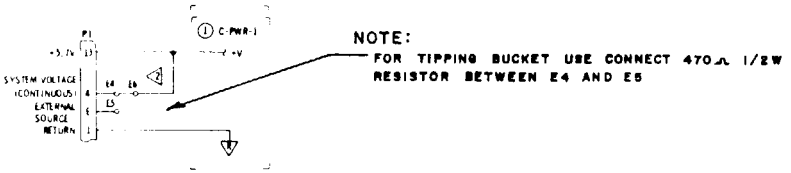

NOTE:
FOR TIPPING BUCKET USE CONNECT 470Ω 1/2W RESISTOR BETWEEN E4 AND E5

1A1A8B INTERROGATION COUNTER (MODIFIED)
REVISED 4/19/78

FIGURE 1

REF DESIG PREFIX 1A1A8A

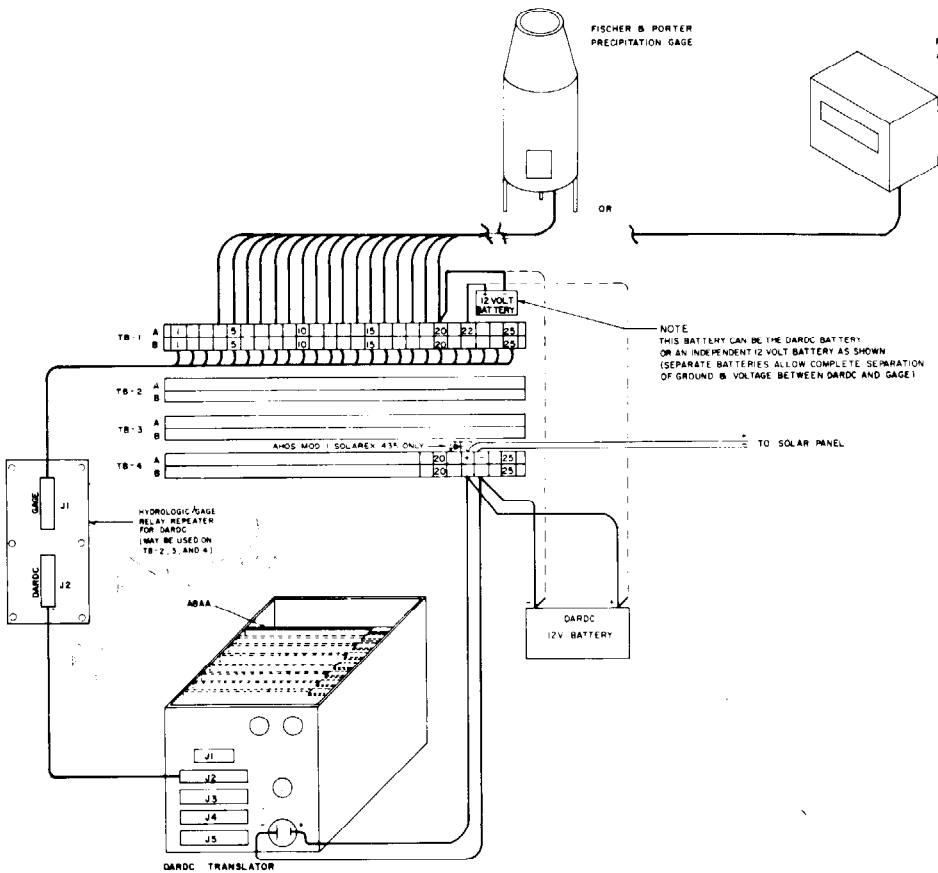

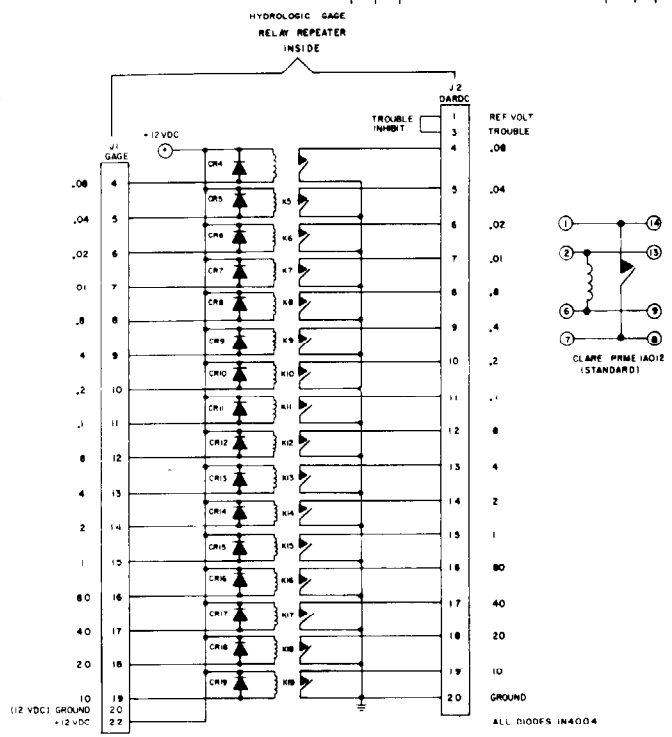

REVISIONS					
Zone	Ltr	Description	Date	Dwn By	App'd

FIND NO	ELEC REF DES	NOMENCLATURE OR DESCRIPTION	QTY REQD	PART OR IDENTIFYING NO	MFRS CODE	CAGE SHEET	SPECIFICATION OR MATERIAL

LIST OF MATERIAL

UNLESS OTHERWISE SPECIFIED
DIMENSIONS ARE IN INCHES
TOLERANCES ANGLES ± 5°
3 PLACE DECIMALS ± .005
2 PLACE DECIMALS ± .02

ENGINEERING DIVISION
SILVER SPRING, MD 20910

PREPARED	R LOWERY	8/19/77
CHECKED	R BALMORI S	8/19/77
DESIGN	R AHLBERG	8/12/77
APPROVED BY		
APPROVED BY		

U.S. DEPARTMENT OF COMMERCE
NATIONAL OCEANIC & ATMOSPHERIC ADMINISTRATION
NATIONAL WEATHER SERVICE

INTERCONNECTION DIAGRAM
FOR HYDROLOGIC GAGE
RELAY REPEATER FOR DARDC
(SUPPLEMENTS B701-DR005)

SIZE D | DATE 8/19/77 | DRAWING NO. B701-DR015

SCALE | SHEET | FILE

UNITED STATES DEPARTMENT OF COMMERCE
National Oceanic and Atmospheric Administration
NATIONAL WEATHER SERVICE
Silver Spring, Md. 20910

April 12, 1979

OA/W5143 - HH

TO: All NWS Regional Headquarters, Area Electronic Supervisors, Electronics Technicians, and Substation Network Specialists

FROM: OA/W51 - J. M. St. Clair

SUBJECT: Transmittal Memorandum for Engineering Handbook No. 10, Issuance 79-3

1. Material Transmitted:

Engineering Handbook No. 10, Hydrologic Equipment, Section 2.3; Automatic Hydrologic Observing System (AHOS) Maintenance Note No. 8, DARDC Tipping Bucket Simulator,

2. Summary:

Maintenance Note No. 8 announces the development and availability of a DARDC Tipping Bucket Simulator as a CLSC nonstock item. Operating Instructions are included with the maintenance note.

3. Effects on Other Instructions:

None.

EHB-10
Issuance 79-3

AHOS MAINTENANCE NOTES
(For Electronics Technicians)

8. DARDC Tipping Bucket Simulator.

A device that simulates the tipping bucket rain gage for testing the DARDC A8B Counter Card has been developed. A description of this device and operating instructions are attached to this maintenance note.

The tipping bucket simulator is available through the NWSH Engineering Division from CLSC as a no-charge nonstock item to only those El Techs who maintain DARDC units connected to tipping bucket rain gages. Requisition your simulator in the following manner:

1. Determine if any of your DARDCs are connected to a tipping bucket rain gage. If so, order the simulator.

2. Fill out a Stores Requisition (NOAA Form 37-4) for your simulator

   Description: Simulator, Tipping Bucket
   (NSI) No Charge

   NOTE: DO NOT ORDER OTHER CLSC STOCK ITEMS ON THIS REQUISITION.

3. Don't send this requisition directly to CLSC; instead send your requisition for processing through your AES (and Regional Headquarters if required) to:

   NOAA-National Weather Service Engineering Division
   8060-13 Street
   Silver Spring, Maryland 20910

   ATTN: Harvey Hoppe (W5143)

Attachment: Description and Operating Instructions for DARDC Tipping Bucket Simulator

DARDC Tipping Bucket Simulator

DESCRIPTION:

The Tipping Bucket Simulator is a solid state C/MOS device used to test the DARDC A8B Counter Card by furnishing pulses to it at a high rate of speed. The entire range of the card (9999 counts) can thus be checked in a short time. The simulator can also be switched to a lower speed and "ON" and "OFF" to allow a close examination of portions of the card count range.

The simulator is housed in a sturdy aluminum box 4-3/4" x 3-3/4" x 2-1/4" and has a 2-foot long cable terminated in a 25-pin Cinch connector which mates with DARDC translator connectors J2, J3, J4, or J5. Three other leads, two for battery connections (red and black alligator clips) and one for the A8B test point (E-Z Mini Hook) extend from the Cinch connector. Two toggle switches (one, a 3-position slow, off, fast, the other a spring-loaded RESET) and a 4-digit LED indicator are mounted on the face of the simulator. The entire/device weighs about a pound and is easy to carry and store.

OPERATING INSTRUCTIONS:

A. Test Conditions

1. DARDC translator ready with A8B card in place (P8, P9, etc.), and appropriate input plug from tipping bucket (P2, P3, etc.), removed from translator front. (Translator top removed).
2. DARDC Test Set connected to translator and adjusted to readout A8B output - 121 for P8, 187 for P9, etc.
3. Tipping Bucket Simulator connected to DARDC battery, red alligator clip to (+), black to (-), E-Z Hook and Cinch plug unconnected.

B. Test Procedure:

1. Check Simulator Operation - put switch in "slow" position for several counts, then "off" - count should freeze on Simulator readout. Reset - then put switch in fast position for a short period; then off - count should freeze. Reset. All counts should be smooth and reset solid with LED readout back to bb00 where b is blank, with no hesitation or bounce. Disconnect the red alligator clip from the battery.
2. With Simulator switch in "off" position plug the Cinch connector into the

appropriate sensor input jack of translator (J2, J3, J4, or J5).

3. Clip the Simulator E-Z hook to the A8B card standoff post E7 connected to R2 (1OK). This post is located on the top left of the A8B and adjacent to the reset switch. Reconnect the red alligator clip to (+). The Simulator display should read bb00 where b is blank.

4. Press the translator RING-IN button. The Test Set readout should be 0000.

5. Place the Simulator switch in "slow" position. Count should advance at approximately two counts per second. Allow the Simulator to count five to ten counts, then return the switch to the "OFF" position.

6. Press the translator RING-IN button. The Test Set readout should be equal to the Simulator display.

7. Place the Simulator switch in "FAST" position. The count should advance at a rate of 300 to 1000 Hertz. Allow the Simulator to count 8000 to 9000 counts, then return the switch to the "OFF" position

8. Press the translator RING-IN button. The Test Set readout should be equal to the Simulator display.

9. Place the Simulator switch in the "FAST" position. Allow the Simulator to overflow (more than 10,000 counts) then return the switch to the "OFF" position.

10. Press the translator "RING-IN" button. The Test Set readout should equal the Simulator display.

11. Actuate the Simulator reset switch. Simulator display should be bb00.

12. Press the translator "RING-IN" button. The Test Set readout should be 0000.

13. This is the end of the test. If no trouble is encountered disconnect the Simulator and return the DARDC to normal operation.

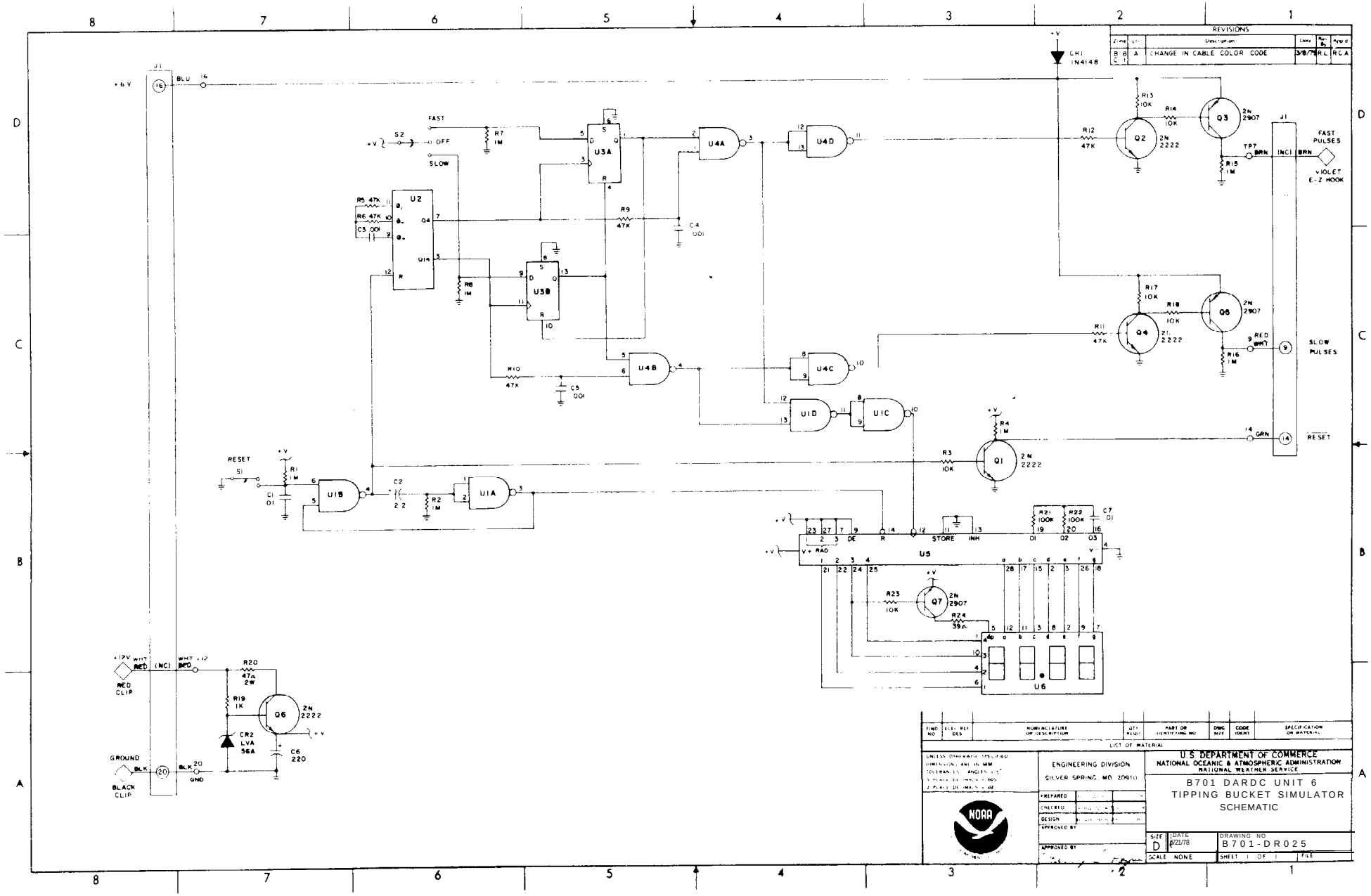
REVISIONS
Zone | Ltr | Description | Date | Rev By | Appd
B 8 C 1 | A | CHANGE IN CABLE COLOR CODE | 3/8/79 | R.L. | RCA
J1
+6V
BLU 16
FAST
S2
OFF
SLOW
R7 1M
U3A
U4A
U4D
U2
R5 47K
R6 47K
C3 .001
R9 47K
C4 .001
R8 1M
U3B
R10 47K
C5 .001
U4B
U4C
U1D
U1C
CR1 1N4148
R12 47K
R13 10K
R14 10K
Q2 2N 2222
Q3 2N 2907
TP7 BRN
(NC) BRN
R15 1M
FAST PULSES
VIOLET E-Z HOOK
R17 10K
R18 10K
Q4 2N 2222
Q5 2N 2907
R11 47K
RED WHT
R16 1M
SLOW PULSES
GRN
RESET
R4 1M
R3 10K
Q1 2N 2222
RESET
S1
R1 1M
C1 .01
U1B
C2 2.2
R2 1M
U1A
R21 100K
R22 100K
C7 .01
STORE
INH
U5
R23 10K
Q7 2N 2907
R24 39Ω
U6
+12V WHT RED (NC) WHT +12 RED
RED CLIP
R20 47Ω 2W
R19 1K
Q6 2N 2222
CR2 LVA 56A
C6 220
GROUND
BLK 20 BLK 20 GND
BLACK CLIP
LIST OF MATERIAL
FIND NO | ELEC REF DES | NOMENCLATURE OR DESCRIPTION | QTY REQD | PART OR IDENTIFYING NO | DWG SIZE | CODE IDENT | SPECIFICATION OR MATERIAL
UNLESS OTHERWISE SPECIFIED DIMENSIONS ARE IN MM
ENGINEERING DIVISION
SILVER SPRING, MD 20910
PREPARED
CHECKED
DESIGN
APPROVED BY
U.S. DEPARTMENT OF COMMERCE
NATIONAL OCEANIC & ATMOSPHERIC ADMINISTRATION
NATIONAL WEATHER SERVICE
B701 DARDC UNIT 6
TIPPING BUCKET SIMULATOR
SCHEMATIC
SIZE D
DATE 6/21/78
DRAWING NO B701-DR025
SCALE NONE
SHEET 1 OF 1
FILE

UNITED STATES DEPARTMENT OF COMMERCE
National Oceanic and Atmospheric Administration
NATIONAL WEATHER SERVICE
Silver Spring, Md. 20910

March 18, 1983 W/OTS141 - CM

TO: All NWS Regional Headquarters, Area Electronics Supervisors, Electronics Technicians, and Cooperative Program Managers

FROM: W/OTS1 - J. Michael St. Clair

SUBJECT: Transmitted Memorandum for EHB-10, Issuance 83-4

1. Material Transmitted:

EHB-10 Handbook, Hydrologic Equipment, Section 2.3, Replacement Page 1 for Maintenance Note No. 8, DARDC Tipping Bucket Simulator.

2. Summary:

The replacement Page 1 provides revised instructions for requesting Tipping Bucket Simulators.

3. Effect on Other Instructions:

None

AHOS MAINTENANCE NOTES
(For Electronics Technicians)

8. DARDC Tipping Bucket Simulator.

A device that simulates the tipping bucket rain gage for testing the DARDC A8B Counter Card has been developed. A description of this device and operating instructions are attached to this maintenance note.

Determine if any of your DARDCs are connected to a tipping bucket rain gage. If so, order the simulator from NLSC.

Attachment: Description and Operating Instructions
DARDC Tipping Bucket Simulator

UNITED STATES DEPARTMENT OF COMMERCE
National Oceanic and Atmospheric Administration
NATIONAL WEATHER SERVICE
Silver Spring, Md. 20910

OA/W5141 - RWB

April 17, 1981

TO: All NWS Regional Headquarters, Area Electronics Supervisors, and Electronics Technicians (EHB-10 Distribution)

FROM: OA/W51 - J.M. St.Clair

SUBJECT: Transmittal Memorandum for Handbook No. 1Q, Issuance No. 81-2

1. Material Transmitted:

Engineering Handbook No. 10, Hydrologic Equipment, Section 2.3; Maintenance Note No. 9: Repair and Replacement Procedures for Handar SMS/GOES Field Test Set.

2. Summary:

This maintenance note provides instructions for the repair of, and requisition procedures for replacement of the Handar SMS/GOES Field Test Set.

3. Effect on Other Instructions:

Disregard previous verbal instructions.

EHB-10
Issuance 81-2

AHOS MAINTENANCE NOTES

(For Electronics Technicians)

9. Repair and Replacement Procedures for Handar SMS/GOES Field Test Set.

The procedure for repair and replacement of defective test sets is as follows:

1. The requesting station will send the defective test set directly to WF516 National Reconditioning Center at Kansas City. Include manuals and accessories, attached WS Form H-14 Equipment Repair Tag, and NOAA Form 37-21 Personal Property Management Record.

2. Prepare a NOAA Form 37-4 Stores Requisition (per attached sample), include a copy of the Personal Property Management Record, and forward through regional approved routing procedures, to W5141, Engineering Division for issuance approval of a replacement test set.

Attachment: NOAA Form 37-4
(Stores Requisition)

NOAA FORM 37-4
(9-77)

U. S. DEPARTMENT OF COMMERCE
NATIONAL OCEANIC AND ATMOSPHERIC ADMINISTRATION

DOCUMENT NUMBER
078383

REQUISITION NUMBER
(For Requisitioner's Use)

STORES REQUISITION

☐ Regular ☐ Special ☐ Emergency ☒ Shipping Request

FROM: NAME OF OFFICE	ORGANIZATION CODE	DATE OF REQUISITION
NOAA-NWS Engineering Division, W5141	WG1400	As Applicable

TO: SUPPLY OFFICE AT
CLSC, Kansas City, Mo. 64124

SHIP TO: MAILING ADDRESS only OF ACCOUNTABLE OFFICE
(NOAA Hdq. office-enter building and room No.)

"Requesting Station" SAMPLE

PACKED IN →	BOXES	CARTONS	CASES	BUNDLES	CRATES

WEIGHT	CARRIER

BILL OF LADING NUMBER	DATE

FILLED BY

TYPE: ☐ ADMINISTRATIVE (Include forms) ☒ TECHNICAL (Equipment-Meteorological, Instrumental, Electronic, and accessories.)

CATALOG NUMBER (For each item)	QUANTITY ON HAND	QUANTITY ORDERED	DESCRIPTION OF ITEM	UNIT	UNITS ISSUED	UNIT PRICE	TOTAL VALUE
Special Project No. 000240 (Baker)	0	1	SMS/GOES Field Test Set, Handar Model 502/option NWS # V131-TS901 Serial Number _____ Field Test Set Serial Number _____ with manuals and accessories returned to NRC, Date: _____ Location: G-17-07-A				

CHARGE TO INVENTORY OF: (If other than consignee)

COST ACCOUNTING DATA

	ORGAN. CODE	TASK NUMBER	OBJECT CLASS
SUPPLIES/ EQUIP.	A S	A P P L I C A B	L E
TRANS-PORTATION	A S	A P P L I C A B	L E

REQUESTED BY
SIGNATURE OF OFFICIAL IN CHARGE
Requesting ET, SET, AES, CEB

APPROVED BY
SIGNATURE OF DESIGNATED OFFICIAL

APPROVAL FOR ISSUE OF NON-EXPENDABLE EQUIPMENT
SIGNATURE OF DESIGNATED OFFICIAL

SPECIAL SHIPPING INSTRUCTIONS OR ADDRESSES

NOAA FORM 37-4
(9-77)

UNITED STATES DEPARTMENT OF COMMERCE
National Oceanic and Atmospheric Administration
NATIONAL WEATHER SERVICE
Silver Spring, Md. 20910

January 12, 1983 W/OTS141 - CM

TO: All NWS Regional Headquarters, Area Electronics Supervisors, Electronics Technicians and Cooperative Program Managers (EHB-10 distribution)

FROM: W/OTS1 - J. Michael St.Clair

SUBJECT: Transmittal Memorandum for Engineering Handbook No. 10, Issuance No. 83-2

1. Material Transmitted:

Enqineering Handbook No, 10, Hydrologic Equipment, Section 2.3; Maintenance Note No. 10: Direct Connection of Handar SMS/GOES Field Test Set.

2. Summary:

This maintenance note provides instructions for the requisition and use of a 30 db attenuator and adaptor when connecting the Handar 502A SMS/GOES Field Test Set directly to data collection platforms.

3. Effect on Other Instructions:

None.

AHOS MAINTENANCE NOTES
(For Electronics Technicians)

10. Direct Connection of the Handar SMS/GOES Field Test Set to the Data Collection Platform Radio Set (DCPRS).

The maximum input to the Field Test Set without damage is +lO dbm. Its sensitivity (S+N)/N 10 db is -106 dbm. The output of our DCPRS is +40 dbm (10 watts). We are providing a 30 db power attenuator and coax adapter to reduce the power level and allow connection of the existing test set coax cable. The 75 db attenuator supplied with the test set should also be used to give a signal level into the test set of about -65 dbm.

The attached drawing should be used when connecting the DCPRS to the test set.

The following parts have been added to NLSC stock. They should be ordered and added to the test set as accessory items.

PART	Description
V131-TS901-AT1	Attenuator, 30 db, Texican Corp., No. HFP50/30.
V131-TS901-AT1CP1	Adapter, N-type, male to TNC-type female

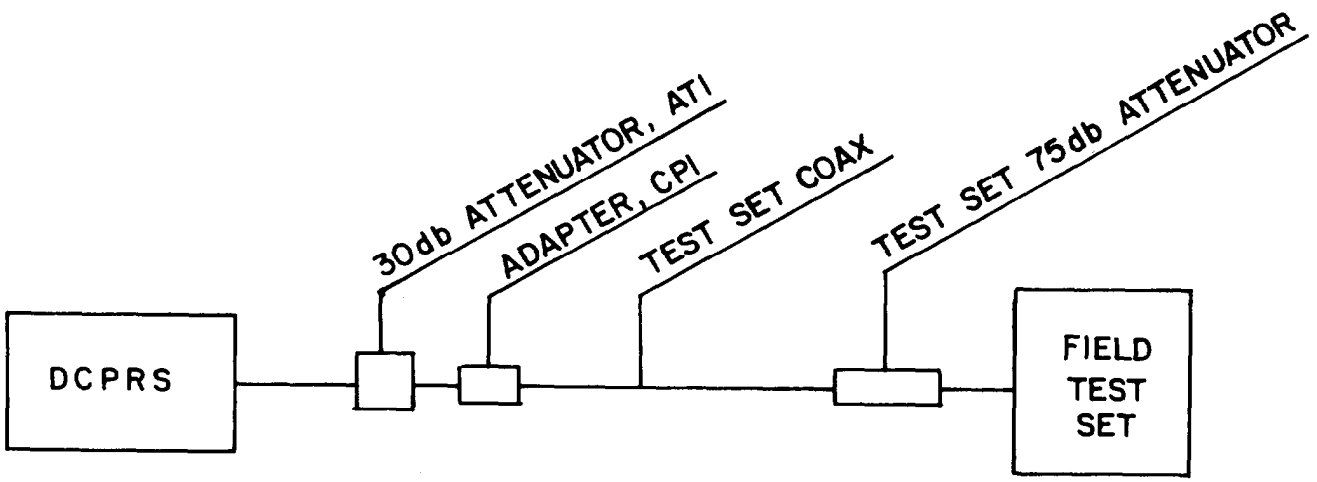
30db ATTENUATOR, AT1
ADAPTER, CP1
TEST SET COAX
TEST SET 75db ATTENUATOR
DCPRS
FIELD
TEST
SET

FIGURE 1

U.S. DEPARTMENT OF COMMERCE
National Oceanic and Atmospheric Administration
NATIONAL WEATHER SERVICE
Silver Spring, Md. 20910

December 18, 1985 W/OTS141 - BGM

TO: All NWS Regional Headquarters, Area Electronics Supervisors, and Electronics Technicians (EHB-10 Distribution)

FROM: W/OTS1 - 3. Michael St. Clair

SUBJECT: Transmittal Memorandum for Engineering Handbook No. 10, Issuance 85-2

1. Material Transmitted:

Engineering Handbook No. 10, Hydrologic Equipment, Section 2.3; Maintenance Note No. 11: Firmware replacement for the 540A Automatic Remote Collector (ARC) satellite system.

2. Summary:

This maintenance note provides instructions for replacement of firmware.

3. Effect on other Instructions:

None.

AHOS Maintenance Note
(for Electronics Technicians)

11. Replacement procedure for ARC satellite firmware revision 3.8. This is the latest firmware for all 540A ARC satellite systems.

1. Open the cover on the ARC satellite and turn system power off.

2. Locate the microprocessor board (CPU) 540-6003 and remove. Refer to Figure 1, locate and remove the EPROM's from sockets U1, U2, U3, U4, and U5 using the IC extraction tool provided. Install the new EPROM's in the following order using the IC insertion tool provided.

IC/EPROM to	Socket Location
540-l	U1
540-2	U2
540-3	U3
540-4	U4
540-5	U5

3. Restore system power. Hook up the 545A programming test set and enter the program.

4. Return the EPROM's that were removed to:

NOAA-National Weather Service
ATTN: Harvey Hoppe, W/OTS13
8060 13th Street
Silver Spring, MD 20910

(Phone: FTS (or 301) 427-7842)

Attachment:
Figure 1

CPU BOARD 540-6003

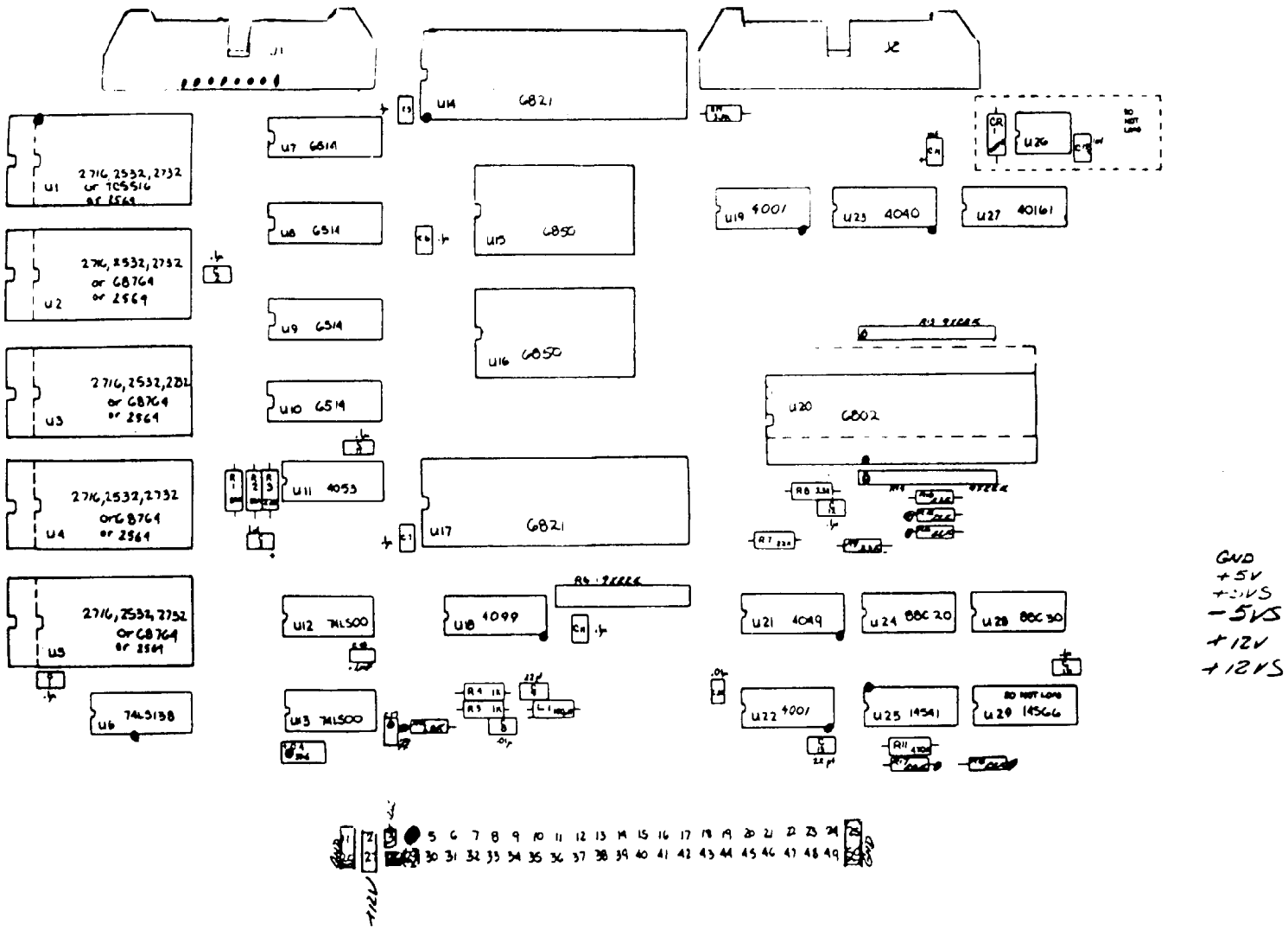

FIGURE #1

U.S. DEPARTMENT OF COMMERCE
National Oceanic and Atmospheric Administration
NATIONAL WEATHER SERVICE
Silver Spring, Md. 20910

W/OTS141 - BGM

December 19, 1985

TO: All NWS Regional Headquarters, Area Electronics Supervisors, and Electronics Technicians (EHB-10 Distribution)

FROM: W/OTS1 - J. Michael St. Clair

SUBJECT: Transmittal Memorandum for Engineering Handbook No. 10, Issuance 85-3

1. Material Transmitted:

Engineering Handbook No. 10, Hydrologic Equipment, Section 2.3; Maintenance Note No. 12: Firmware replacement for the marine tide gage systems.

2. Summary

This maintenance note provides instructions for replacement of firmware.

3. Effect on other Instructions:

None.

AHOS Maintenance Note
(For Electronics Technicians)

12. Replacement procedure for 540A marine tide gage firmware revision 4.8.

This is the latest firmware for all 540A marine tide gage systems.

1. Open the cover on the marine tide gage and turn system power off.

2. Locate the microprocessor board (CPU) 540-6016 and remove. Refer to Figure 1, locate and remove the EPROM's from sockets U3, U4, and U5 using the IC extraction tool provided. Install the new EPROM's in the following order using the IC insertion tool provided.

IC/EPROM		Socket Location
540-3	to	U3
540-4	to	U4
540-5	to	U5

3. Restore system power. Hook up the 545A programming test set or the data terminal model TI 707 and enter the program.

4. Return the EPROM's that were removed to:

NOAA-National Weather Service
ATN: Harvey Hoppe, W/OTS13
8060 13th Street
Silver Spring, MD 20910

(Phone: FTS (or 301) 427-7824)

Attachment:
Figure 1

CPU BOARD 540- 6016

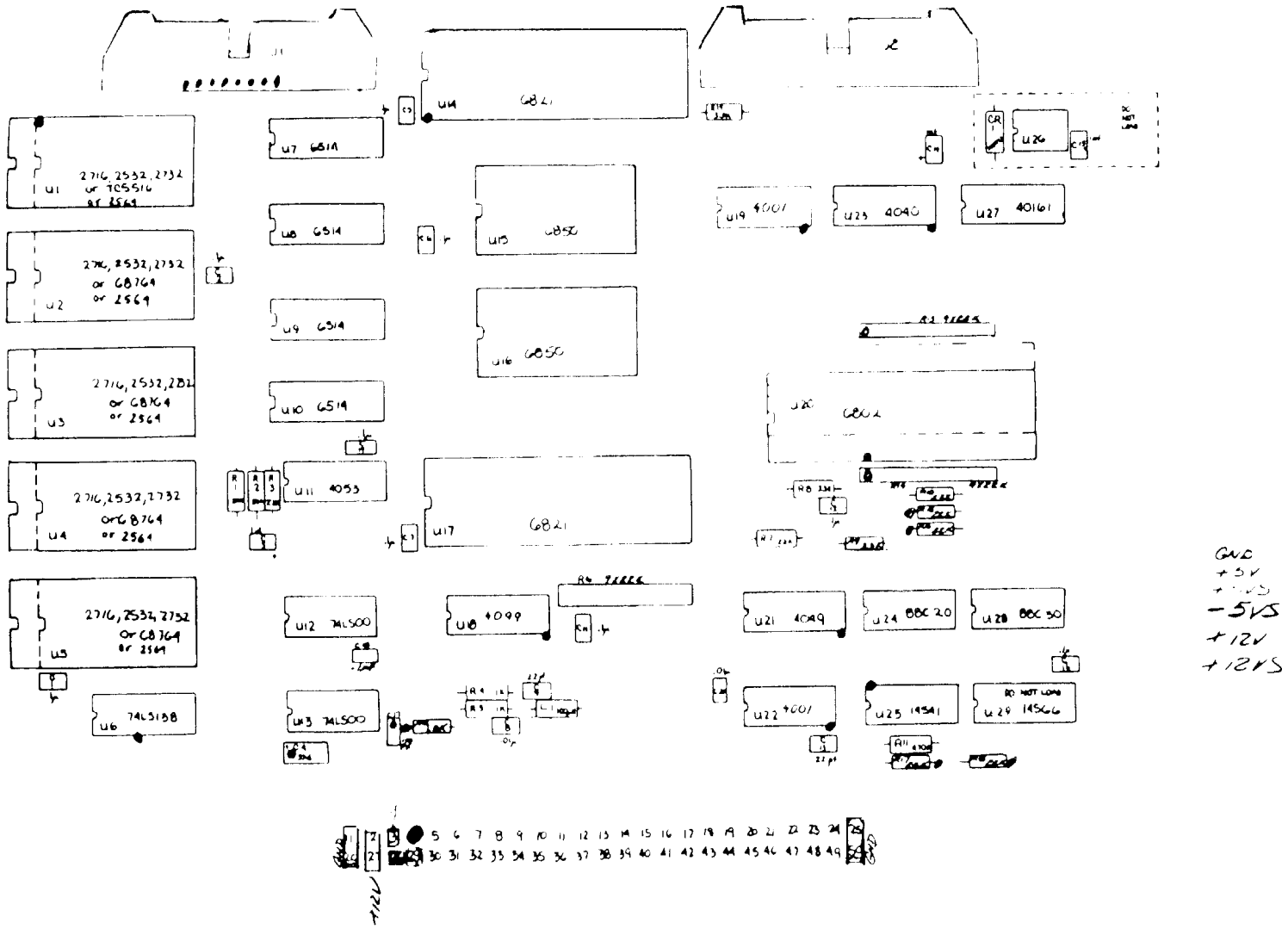

FIGURE #1

U.S. DEPARTMENT OF COMMERCE
National Oceanic and Atmospheric Administration
NATIONAL WEATHER SERVICE
Silver Spring, Md. 20910

W/OTS141 - BGM

April 18, 1986

TO: All NWS Regional Headquarters, Area Electronics Supervisors, and Electronics Technicians (EHB-10 Distribution)

FROM: W/OTS1 - J. Michael St.Clair

SUBJECT: Transmittal Memorandum for Engineering Handbook No. 10, Issuance 86-2

1. Material Transmitted:

Engineering Handbook No. 10, Hydrologic Equipment, Section 2.3; Maintenance Note No. 13: Installation of the Limited Automatic Remote Collector (LARC), Handar Model 550A Hydrologger.

2. Summary:

This maintenance note provides technical information for installation and initializing of the LARC system. It contains the Technical Information Package for the Handar 550A Hydrologger system.

3. Effect on Other Instructions:

None.

EHB-10
Issuance 86-2

AHOS MAINTENANCE NOTE
(For Electronics Technicians)

13. Technical Information Package - Installation of the Limited Automatic Remote Collector (LARC), Handar Model 550A Hydrologger

1. The LARC replaces the aging BDT, DARDC, Telemark, and the DCC Hydrologic equipment owned by the NWS.

The attached Technical Information Package (TIP) provides useful supplementary information for the installation and initialization of the LARC. The first LARC systems will be delivered to the Eastern Region stations from the NLSC.

TECHNICAL INFORMATION PACKAGE
FOR
HANDAR 550A HYDROLOGGER SYSTEM

	Page
SECTION I - Installation Schedule	1
A. Locations	1
B. Equipment Delivery	1
C. Site Survey and Installation	1
SECTION II - Installation Criteria	2
A. General	2
B. Physical Characteristics	2
C. Receiving Information	2
D. Power Requirements	2
E. Interconnections	3
SECTION III . Installation Procedure	3
A. Introduction	3
B. System Location	3
C. Mounting Instructions	3
D. Incremental Shaft Encoder Installation ADR-F&P Gages	3
E. Incremental Shaft Encoder Installation - Stand Alone Configuration	5
F. Solar Panel Installation	6
SECTION IV - System Initialization	6
A. System Start-up	6
B. Programming	7
SECTION V - Documentation	8
A. Instruction Manuals	8
B. Special Drawings	8
C. Maintenance Schedule	9
D. EMRS Reporting	9
E. Instrumental Equipment Catalog	9
SECTION VI - Maintenance Training	9
A. Initial Training	9
B. NWSTC Training	9

Page

SECTION VII - Maintenance Policies 9

A. Maintenance Responsibilities 9
B. Extent of On-Site Repair 10
C. Equipment Guarantee 10
D. Staffing .....
E. Disposition of Replaced Equipment 10
F. Firmware Revisions 10

Attachments 11

SECTION I

Installation Schedule

A. Locations

Initial stations receiving the Limited Automatic Remote Collector (LARC) system in priority order are as follows:

1.	Portland, ME	4 units
2.	Albany, NY	2 units
3.	Washington, D.C. (WBC)	13 units
4.	Charleston, WV	9 units
5.	Cleveland, OH	2 units
6.	West Columbia, SC	2 units

B. Equipment Delivery

The manufacturer is expected to deliver the initial procurement of new LARC systems during the months between January and July 1986. These systems will be forwarded to NRC for inspection before distribution to the field. Engineering Division will issue all future LARC systems and peripheral equipment to the field stations based upon information furnished to the Hydro Program Engineer's office. The type of information needed is:

1. Does the site have AC power?
2. Is the site stage, F&P precipitation, or both?
3. Is a solar panel needed?
4. Is an enclosure required?
5. What type of equipment is being replaced?

This information should be forwarded by regional headquarters to the Engineering Division, W/OTS13.

C. Site Survey and Installation

A site survey should be made before installation of the LARC system. The LARC can be mounted in the river gage house or inside a DARDC enclosure, if available. During this survey, consideration should be given to system location, length of cable run to the sensor(s) (436A), and grounding. Keep in mind that the system should have access to a telephone jack (RJ-11C-Type). Check site requirements for battery charger or solar panel, also the type of installation river level/ F&P precipitation gage, or both. Another requirement for the site is a 6 to 8 foot copper clad steel ground rod, or a metal water pipe for grounding.

SECTION II

Installation Criteria

A. General

The NWS is replacing the BDT, DARDC, TELEMARK, and DIRECT CONNECT COUPLERS currently used in the Hydrologic program with the LARC system.

The LARC system is a remote data collection system that provides real-time data to be retrieved via the telephone network. The LARC has a solid state memory that can store up to 3500 data points. This data can be accessed remotely by telephone, terminal, or voice. The LARC system has the ability to dial out to a telephone number when the programmed limits are exceeded.

Before any installation is made involving another agency's equipment, you must coordinate this effort through them.

B. Physical Characteristics

The LARC electronics are hermetically sealed in a plastic box that measures 13-1/2" x 11-1/4" and weighs 11 pounds. There are four mounting holes, 5/16 inches in diameter, for easy installation to wall or bench.

C. Receiving Information

The LARC system auxiliary components consisting of the following items will be shipped to the stations by engineering.

1. 436A Incremental Shaft Encoder and Bracket and/or F&P encoder kit
2. Connectors to fabricate cables
3. Battery charger or solar panel
4. Data Terminal TI Model 707
5. Modem cable to telephone jack
6. Enclosure (by request)

The LARC system will be delivered to the stations from special projects by W/OTS14. If the shipping cartons are damaged, contact the carrier and inspect the equipment for damage. If equipment is damaged and will not operate properly, inform carrier and the Engineering Division (Bobby McCormick, 301/427-7836 or FTS 427-7836).

D. Power Requirements

Primary power for the LARC system is a rechargeable 12v, 6.5 AH Gel Cell battery. Locations that do not have access to AC power will use a solar panel to charge the battery. A location with a special power problem may require a large external battery as a power source (refer to Attachment 2).

E. Interconnections

The attached wiring table hook-up is included as an aid for installation of the 436A incremental shaft encoder (refer to Attachment 1).

SECTION III

Installation Procedure

A. Introduction

The LARC system is easy to install, provided some planning and forethought are used prior to installation. A preliminary plan should be made before installation with consideration given to system location. Keep in mind that the system must have access to a telephone jack (RJ-11C-TYPE) and AC power if available.

B. System Location

There are two general types of locations where the LARC system may be installed. Typically they consist of a river gage house or an existing DARDC enclosure.

When determining the location of the LARC, consider cable length and ample space for servicing and replacing equipment.

C. Mounting Instructions

Mount the LARC system on any flat surface using bolts in the four mounting holes or place it inside the DARDC enclosure. Install a grounding rod as near as possible to the system. Use a 6 to 8 foot rod with 1" braid or copper strap to ground the LARC system. Also install a lightning protection device in the telephone line.

D. Incremental Shaft Encoder Installation - ADR and F&P

This portion of the installation is the most critical. It is not difficult, but if not done correctly, it will affect the operation of both the ADR and LARC systems. The following procedure applies to the installation of a 436A incremental shaft encoder to the F&P river level ADR. First, verify that the proposed location of the incremental shaft encoder does not affect the operation and maintenance of existing equipment.

1. Attach the incremental shaft encoder (436A) to the mounting bracket (P/N D105-1MP1) provided with the kit.

2. Install the hubbed 50-tooth chain sprocket to the incremental shaft encoder. Be sure the set screw is located on the flat of the shaft.

3. Remove the ADR dust cover.

4. Wait for the gage to punch. Record the following information:

   * Draw a line at last punched reference
   * Date, MM/DD/YY; example - 07/13/85
   * Local time including time zone; example - 15/06 EST
   * Staff or tape reading; example - 2.4 ft.

5. Replace the removed dust cover on the ADR.

6. Remove the nut from the drive pulley shaft and remove the flange with thumb screws and flat washer.

7. Install the hubless 50-tooth chain sprocket provided in kit, flat washer, flange with thumb screws and nut. Tighten thumb screws until they are snug.

8. Using the available lengths of chain (provided in kit) establish location of the incremental shaft encoder bracket by placing a length of chain around the 50-tooth chain sprockets and moving the bracket until the chain is taut. Be sure the chain is in alignment with the 50-tooth chain sprocket assembly.

   * Mark and drill the four mounting holes for the incremental encoder bracket. Bolt the bracket to the mounting surface. Leave the incremental shaft encoder bolts hand tight.

   * Install the chain on the two 50-tooth chain sprockets. The chain should have approximately 1/4" to 3/8" movement after installation.

   * Tighten the incremental shaft encoder bolts.

The following procedure applies to the installation of a 436A incremental shaft encoder to the F&P weighing precipitation gage.

1. Remove the hood, collector and lower case from the F&P weighing precipitation gage. Disconnect the battery leads.

2. Refer to Figure 1 to locate the spur gear. Turn the code disc until the roll pin is in a position to be punched out. Tape the code disc and drive gear assembly in this position. Do not allow either of these assemblies to move as the spur gear is being replaced.

3. Use the drive pin punch (3/32") provided and drive the roll pin from the spur gear and shaft. Loosen the spur gear set screw and remove gear.

4. Install the spur gear with the attached 35-tooth chain sprocket. Align the holes in the spur gear with the holes in the shaft. Drive the roll pin through the holes in the shaft. Remove tape from the code disc and gear assembly. Rotate the spur gear and check for binding.

5. A ratchet, 12" extension, and a 7/16″ socket are tools needed to remove and install the two 1/4-20 bolts from the support bracket. Remove the two 1/4-20 bolts from the scale support (reference Figure 1).

6. Install the 436A incremental shaft encoder and bracket; orient the shaft of the encoder toward the code disc. Use the two 1/4-20 1″ bolts that are provided, and bolt the bracket to the support scale.

7. Install the 35-tooth hubbed chain sprocket onto the incremental encoder shaft. Align the chain sprocket set screw to the flat of the encoder shaft and tighten.

8. Leave the four hex bolts holding the incremental shaft encoder to the bracket slightly loose. Install the drive chain (3CCF-100-E) onto the chain sprockets. Adjust the drive chain by moving the incremental shaft encoder up or down. The drive chain after adjustment should have approximately 1/4" to 3/8" movement in the chain. After proper tension is obtained, tighten the four hex head bolts.

NOTE: The telemetering kit removal is optional.

9. Locate TB-2 on the F&P precipitation gage and remove the wires coming from the interface enclosure. Follow the wiring table below for hook-up.

Wires removed from TB-2	to TB-1 (Incremental Encoder Bracket)
TB2 .l	TB1-5
TB2 .2	TB1-4
TB2 .4	TB1-3
TB2 .8	TB1-6

10. Restore power to the F&P weighing precipitation gage. Check gage for tracking and correct punch. This concludes installation of the 436A incremental shaft encoder to the F&P gage.

E. Incremental Shaft Encoder Installation - Stand Alone Configuration

This procedure applies to the installation of a 436A incremental shaft encoder, and bracket for use as a stand alone configuration.

1. Attach the 436A incremental shaft encoder to the mounting bracket using the hardware provided.

2. Install the parts below onto the shaft of the 436A incremental shaft encoder, in the order they appear on the list.

Note: These parts can be removed from the old ADR, or telemark, equipment being replaced, and used for a stand alone installation. If these parts are not available, order them from NLSC.

* Hub	P/N D105-2MP7
* Drive Pulley	D105-2MP5
* Flange	D105-2MP3
* Castle Nut	D105-2MP1
* Thumb screws	D105-2MP2

3. Select the location in the gage house where the stand alone configuration is to be mounted; mark and drill the four mounting holes for the incremental encoder bracket. Bolt the bracket to the mounting surface.

4. Install the tape, float, and weight onto the drive pulley and lower into the stilling well. If a tape is not available, order from NLSC -- P/N D550-N101.

5. Connect one end of the cable assembly 550-3004 to the 436A incremental shaft encoder and the other end to the 550A hydrologger.

6. This completes a stand alone installation for the LARC system.

F. Solar Panel Installation - LARC

A suitable location for installation of the SX-10 solar panel should be selected. The solar panel must be positioned so the solar cells are exposed to full sunlight. A solar panel voltage regulator is built into the LARC, therefore you do not need a blocking diode for the solar panel.

The external power leads on Handar Cable Assembly (550-3004) are used for hook-up to the SX-10 solar panel.

1. Connect the positive lead of the cable assembly (550-3004) to the positive terminal on the solar panel.

2. Connect the negative lead of the cable assembly (550-3004) to the negative terminal on the solar panel.

SECTION IV

System Initialization

A. System Start-up

The LARC system should be securely in place, all cables connected and the incremental shaft encoders mechanically connected to the ADR, or F&P weighing precipitation gage, or both.

The LARC system can be programmed directly on site or remotely using an ASCII terminal over the telephone network. A Texas Instruments (TI) terminal, model 707, is provided that has a built-in direct connect modem. This allows the terminal to be programmed at a field site or the office. Stations that have 545A programming sets can use those sets to program the LARC system.

Before any programming is done on the TI terminal the keyboard switches must be in the following mode:

*UPPERCASE SWITCH = DOWN TOWARD DOT
*ON LINE SWITCH = DOWN TOWARD DOT
*LOCAL COPY SWITCH = AWAY FROM DOT

* The telephone line cord provided with the TI terminal is for office hook-up. For a field hook-up to the terminal, use the LARC system modem cable (560-3010).

Terminal Hook-up for Field Site

1. Connect the modem cable (560-3010) between the connector labeled "Telephone" on the LARC system and the jack on the rear of the TI terminal labeled "Wall."

2. Open the LARC system, connect the battery lead, and turn the power switch on. The switch is located on the inside lid of the LARC system.

3. The LARC system is now ready to accept the configuration program.

Terminal Hook-up for Office

1. Connect the telephone line cord between the telephone company's jack and the jack labeled "Wall" on the TI terminal.

2. The LARC system is now ready to accept the configuration program.

B. Programming

The following procedure and attached programming example is a guideline for programming the LARC system.

The two modes of operation for the LARC system are PROGRAM and RUN. Each line prompt, on the program starts with either the letter "P" for program or "R" for run mode. The LARC system is programmed through a series of keyboard commands. To enter the program mode, push the question mark (?) key on the keyboard. The letter "Y" enters the run mode.

The following procedure is to be used to program the LARC at a field site.

1. Connect the modem cable between the telephone connector on the LARC and jack labeled "Wall" on the TI terminal.

2. Turn the terminal power on and press the "CMD" key and then the letter "D." The word "Dial" will be printed. Enter the telephone number of the LARC system.

3. To originate a ring-in to the LARC system, press the switch located on the voice/modem board. The prompt "I.D." will be printed. Enter Identification Code and press the "RTN" key.

At this point, the LARC system is ready to be programmed using the TI terminal.

Refer to the 550A Hydrologger manual, provided with the system for information needed to program the LARC system. This information is found in Section 3 of the manual. Use the program example, Attachment 3, as a guideline to program the LARC system.

If the LARC is programmed at the field site, do not forget to return to the RUN mode, and connect the modem cable to the telephone company's phone jack.

NOTE: Any LARC system used with the CADAS network must use only a four letter or number I.D. code. It is suggested that the present I.D. code be used.

SECTION V

Documentation

A. Instruction Manuals

The LARC system comes from the factory with a "55OA Hydrologger Manual." The manual contains both technical and general information for the LARC system and ASCII terminal.

B. Special Drawings

The drawings and attachments needed for the installation of the LARC are described below.

These are contained in the attachments and drawings section.

Figure 1 - Precipitation Gage - Recorder - Rear View
Attachment 1 - LARC System Field Condiguraton
Attachment 2 - External Battery Installation for LARC System
Attachment 3 - LARC Sample Program
D105-1-FD002 - Handar Shaft Encode (436) Marine Mounting Configuration
D925-1-FD001 - LARC Sensor, I/O and Telephone Connection Diagram

C. Maintenance Schedule

The LARC should be inspected annually. The cover should be opened to check for any moisture leaks or accumulation. The connectors should be inspected for leaks and corrosion on the contacts and replaced or repaired if leakage is evident. Calibration or repair of the system should be done in an equipped maintenance facility.

D. EMRS Reporting

Continue to report maintenance activity on the LARC system under EMRS reporting code LARC as described in EHB-4 and National Weather Service Operations Manual Chapter A-14.

E. Instrumental Equipment Catalog

All stock items for maintenance of the LARC system will appear in the Instrumental Equipment Catalog, EHB-1, Section D.

SECTION VI

Maintenance Training

A. Initial Training

A training course was held November 1985, in Albany, New York, to familiarize field technicians and AES's with the installation and programming of the LARC system. The class had ten (10) attendees from the Eastern region.

The electronics technicians should familiarize themselves with the 550A Hydrologger manual and the Texas Instrument's user's manual before attempting to program the LARC system.

B. NWSTC Training

All future classes on this equipment will be held at NWSTC. A course is being prepared by NWSTC; the course number is not available at this time.

SECTION VII

Maintenance Policies

A. Maintenance Responsibilities

The organizational responsibility for installation and maintenance of the LARC will be the electronics technician(s) currently maintaining the DARDC, Telemark, and BDT. Responsibilities are generally defined in the NWS Operations Manual, Chapter H-50.

B. Extent of On-Site Repair

At the conclusion of the equipment warranty period (1 year from date of acceptance from the factory), correction repairs will consist of whole system replacement. Replacement items such as batteries, incremental encoders, terminals, etc., should be requested through normal logistics channels.

C. Equipment Guarantee

The 550A Hydrologger, a Handar product, is warranted against defects in materials and workmanship. This warranty applies for one year from date of government acceptance. Government acceptance will be deemed to have occurred no more than 30 days after receipt of goods.

Handar will repair or replace products which prove to be defective during the warranty period.

Handar does not warrant batteries or damage caused by faulty batteries. No other warranty is expressed or implied. Handar is not liable for consequential damages.

During the 1 year warranty period, the electronic technician(s) should follow the normal procedures in EHB-4 for returning defective equipment. The battery should be removed before equipment is returned to NRC. The NRC will coordinate warranty repairs.

D. Staffing

The requirement for staffing will not be increased over the present workload assigned to the DARDC, Telemark, and BDT as a result of installation of the LARC system. Workforce requirements are estimated to be near present BDT levels.

E. Disposition of Replaced Equipment

An H-14 form is to be filled out when returning BDT equipment replaced by the LARC system to NRC. The returned BDT equipment is to be working checked and repaired if necessary and placed into NLSC stock.

F. Firmware Revisions

The Engineering Division will notify the regional headquarters of any firmware (EPROMs) changes and course of action to be taken. Implementation of required firmware changes will be accomplished through the EHB-10 directives system.

Attachments:

1. LARC System Field configuration
2. External Battery Installation for LARC System
3. D105-1-FD002 Handar Shaft Encoder (436) Marine Mounting Configuration
4. D925-1-FDOO1 LARC Sensor, I/O and Telephone Connection Diagram
5. LARC Sample Program
6. Precipitation Gage - Recorder - Rear View

EXTERNAL BATTERY INSTALLATION FOR LARC SYSTEM

Some special locations may require a "large" external battery as a power source for the LARC system. The following instructions are offered for such an installation:

1. Remove the present internal battery from the Handar 550 enclosure. This step is important. If the battery is left in the unit, damage could occur to the electronic circuitry.

2. Carefully solder a male battery lug (same type as the ones attached to the internal battery) to the terminal marked (+) SOLAR PANEL on the battery charger board of the 550. This board is located on the side of the enclosure near the battery.

3. Connect the RED lead that was previously attached to the internal battery to the new lug installed in Step #2.

4. Now the external battery can be connected to the Battery Charger leads associated with J2 of the Handar 550 (J2A, +12vdc and J2B, -12vdc).

5. If an external charging system is to be used, connect it directly to the external battery. Make sure the system has the proper isolation features so the battery will not discharge through the charger when current is not being fed to the battery.

Attachment No. 2

Larc Sample Program

```
ID:  00000RM2
P    ID                    00000RM2
P  Station Time            12:57:49     Larc operating criteria
P  Call Mode                     11
P  Dardc Baud (110/300)         300
P  Next Call Time        On Limits
P  Call Interval         On Limits
P Dump Number of Scans           02
P Next Log Time               13:00
P Log Interval                01:00
P Tel #:Area Code             l-301
P Tel #:Local             899-3155
P Channel No.                    01
P 01 Sensor type                 01    Encoder #1 precip
P 01 Value/Increment          00.10
P 01 Current Value            05.60
P 01 Voice Code                  66
P 01 High Limit           No Limit
P 01 Low Limit            No Limit
P 01 Pos Diff Limit       No Limit
P 01 Neg Diff Limit       No Limit
P Channel No.                    02    Encoder #2 stage
P 02 Sensor Type                 02
P 02 Value/Increment          00.01
P 02 Current Value            03.76
P 02 Voice Code                  63
P 02 High limit               07.00
P 02 Low Limit            No limit
P 02 Pos Diff Limit       No limit
P 02 Neg Diff Limit       No limit
P Channel No.                    03    Tipping Bucket
P 03 Sensor Type                 03
P 03 Value/Increment          00.01
P 03 Current Value            00.00
P 03 Voice Code                  50
P 03 High Limit            No Limit
P 03 Low Limit             No Limit
P 03 Pos Diff limit        No Limit
P 03 Neg Diff Limit        No Limit
Dump number of scans (01826) ? 10         Cntrl "s" for Data
03:00  05:60  03:73   00.03
04:00  05:60  03:73   00.02
06:00  05:60  03:74   00.01
07:00  05:60  03:76   00.09
08:00  05:60  03:76   00.08
09:00  05:60  03:76   00.07
10:00  05:60  03:76   00.06
11:00  05:60  03:76   00.05
```

Attachment 3

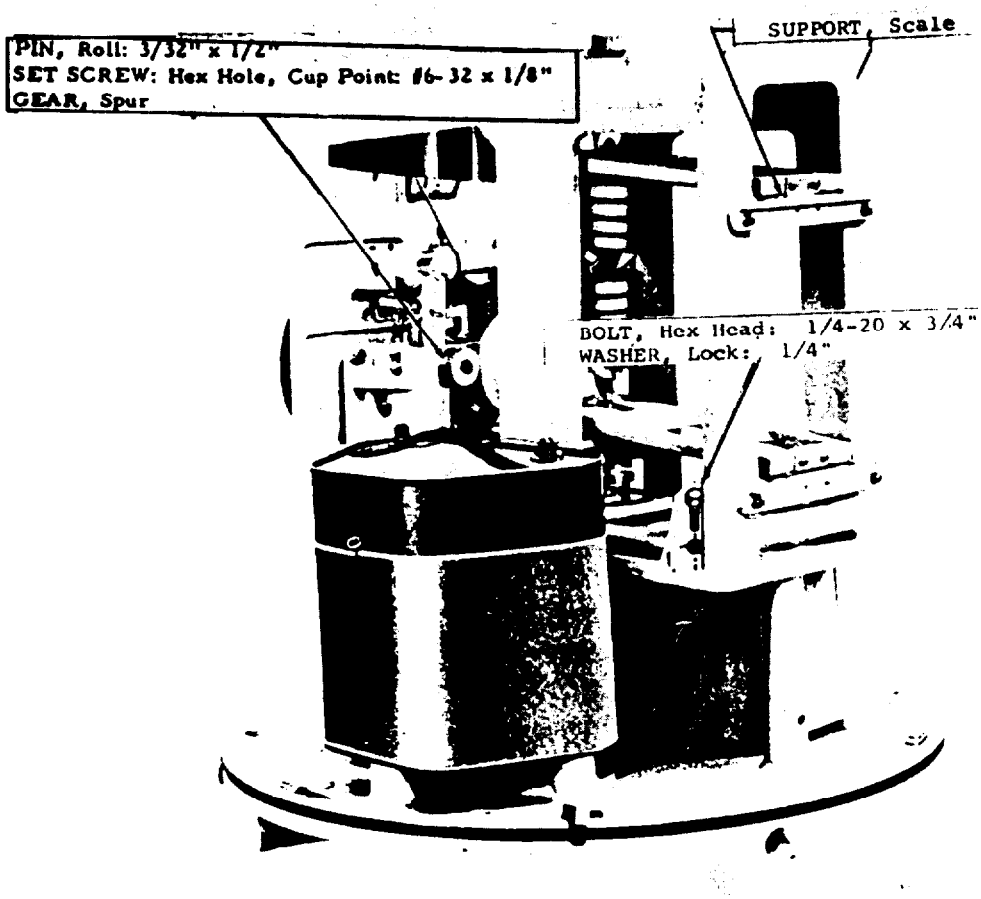

FIGURE 1

PRECIPITATION GAGE-RECORDER
REAR VIEW

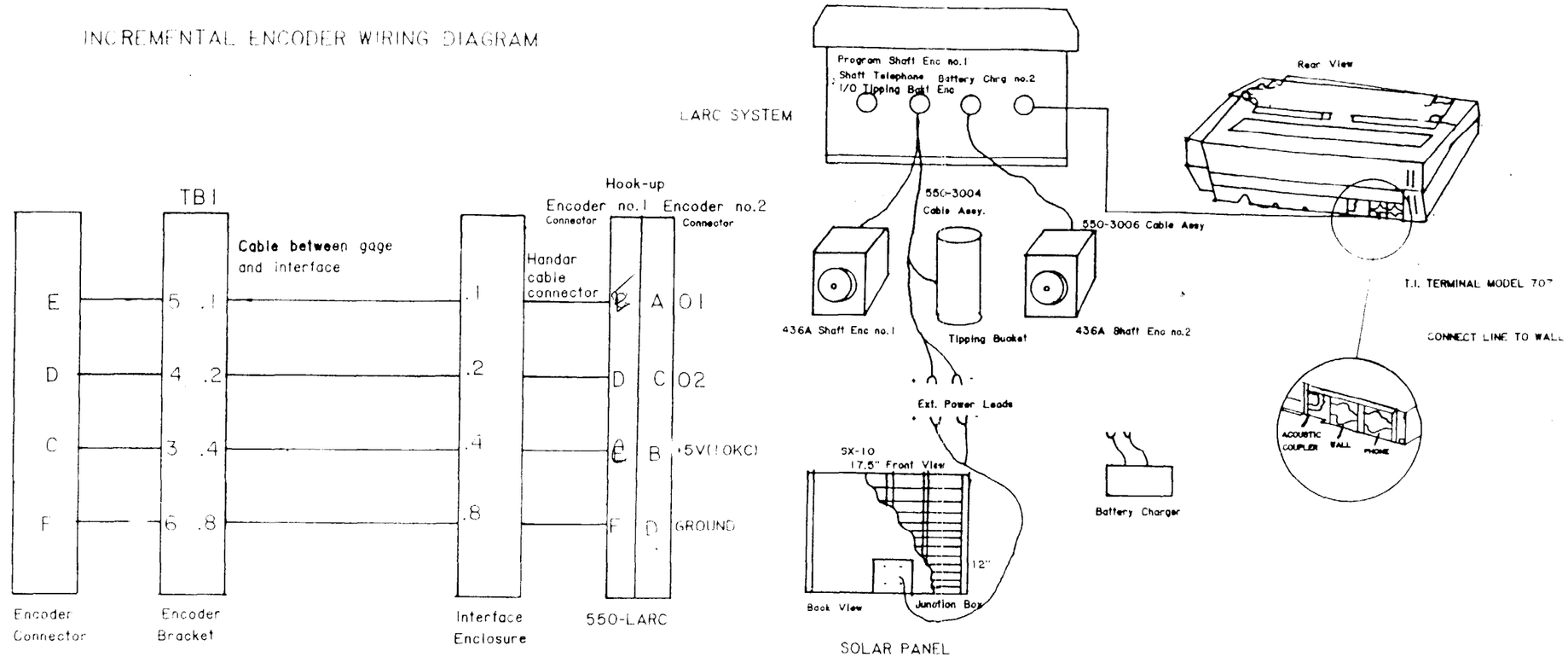

LARC SYSTEM FIELD CONFIGURATION

ATTACHMENT NO 1

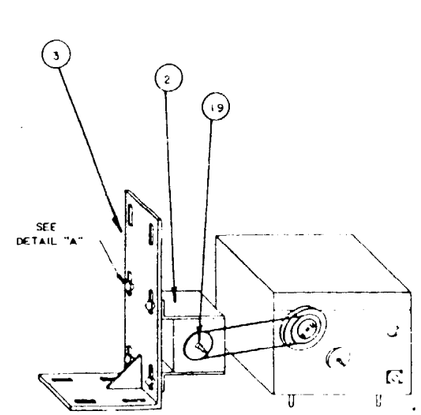

NORMAL SET UP

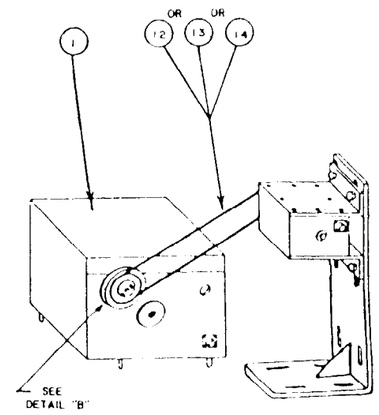

REVERSE SET UP

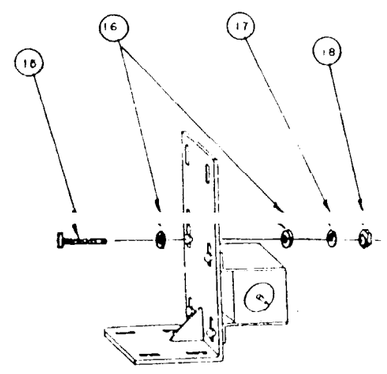

DETAIL "A"

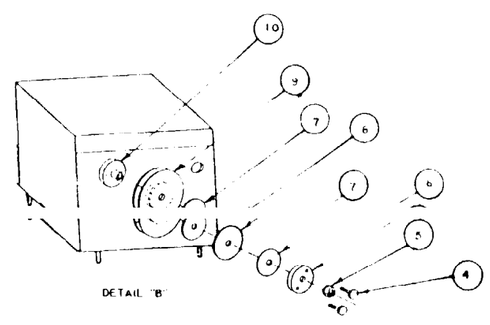

DETAIL "B"

MOUNTING CONFIGURATIONS

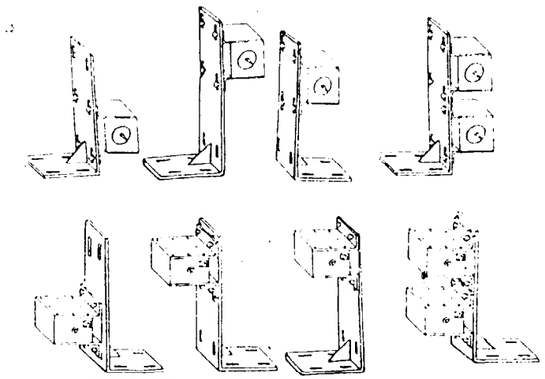

FIND NO.	XLBC REF DES	NOMENCLATURE OR DESCRIPTION	QTY REQD	PART OR IDENTIFYING NO.	DWG SIZE	CODE IDENT	SPECIFICATION OR MATERIAL
21							
20							
19		CHAIN SPROCKET		3MP 32A-35		39440	
18		NUT 1/4"-20	4				STAINLESS STEEL
17		LOCK WASHER 1/4"	4				STAINLESS STEEL
16		FLAT WASHER 1/4"	4				STAINLESS STEEL
15		HEX HD BOLT 1/4"-20 3/4"	4				STAINLESS STEEL
14		MIN-E-PITCH CHAIN	1	3CCF-220-E		39440	
13			1	3CCF-170-E		39440	
12			1	3CCF-150-E		39440	
11						39440	
10		HUB	1	8710079		62206	
9		DRIVE PULLEY	1	665A811		62206	
8		CHAIN SPROCKET	1	3MF 5A-70		39440	1/2" BORE HUBLESS
7		FLAT WASHER	2	3778002		62206	
6		FLANGE	1	363B075		62206	
5		CASTLE NUT	1			62206	
4		THUMB SCREW	2	3968019		62206	
3		ENCODER MOUNTING BRACKET	1	D105-1MP1			D106-1MP1-90001
2		HANDAR SHAFT ENCODER	1	MODEL 436A			
1		F & P ADR	1				

LIST OF MATERIAL

UNLESS OTHERWISE SPECIFIED DIMENSIONS ARE IN INCHES
TOLERANCES ANGLES ± .5°
3 PLACE DEC ± .005
2 PLACE DEC ± .02

MATERIAL

ENGINEERING DIVISION
SILVER SPRING MD 20910

PREPARED	D EDELEN	
CHECKED		
DESIGN		
APPROVED BY		
APPROVED BY		

U S. DEPARTMENT OF COMMERCE
NATIONAL OCEANIC & ATMOSPHERIC ADMINISTRATION
NATIONAL WEATHER SERVICE

HANDAR SHAFT ENCODER (436)

MARINE MOUNTING CONFIGURATION

SIZE	DATE	DRAWING NO
	3/20/85	D105-1-FD002

SCALE SHEET FILE

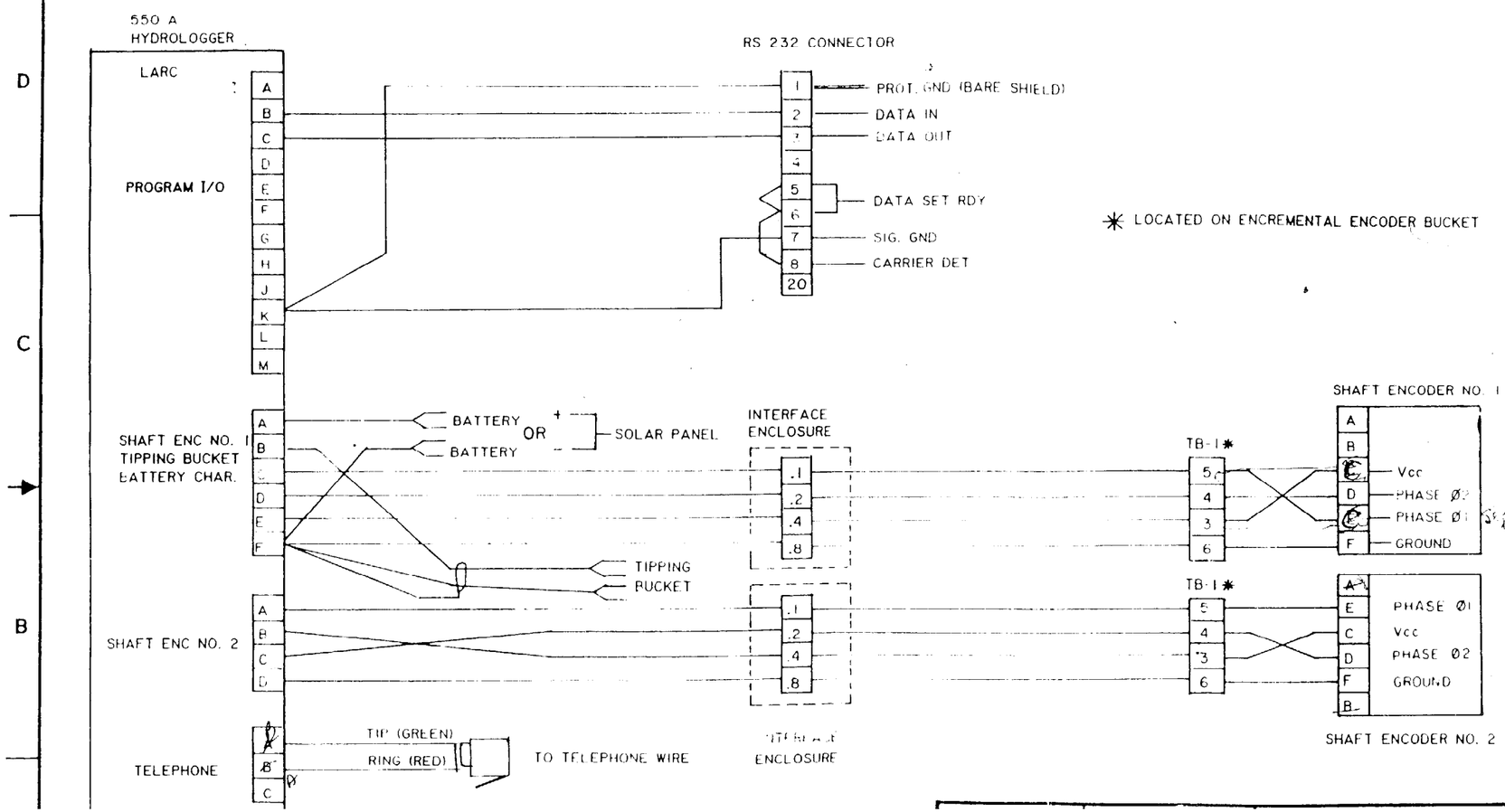

UNLESS OTHERWISE SPECIFIED DIMENSIONS ARE IN INCHES
TOLERANCES ANGLES ± 5°
3 PLACE DEC ± .005
2 PLACE DEC ± .02

MATERIAL

ENGINEERING DIVISION
SILVER SPRING MD 20910

PREPARED	REB	1/31/86
CHECKED		
DESIGN		
APPROVED BY		
APPROVED BY		

U.S. DEPARTMENT OF COMMERCE
NATIONAL OCEANIC & ATMOSPHERIC ADMINISTRATION,
NATIONAL WEATHER SERVICE

LARC SENSOR, I/O AND TELEPHONE CONNECTION DIAGRAM

SIZE	DATE	DRAWING NO
		D925FD001
SCALE	SHEET 1 OF 1	FILE

AHOS ERRATA SHEET 1 (for Electronics Technicians)
Engineering Division
W/OSO321:BGM

Pen-and-ink Changes to AHOS Maintenance Note 13

GENERAL

The purpose of this errata sheet is to correct attachment 1 and the D925-FD00l wiring diagram in AHOS Maintenance Note 13: Installation of the Limited Automatic Remote Collector (LARC), Handar Model 550A Hydrologger, issued April 18, 1986. This errata sheet provides a diagram that shows the wiring corrections for incremental shaft encoder number one. Instructions are provided for pen-and-ink changes to attachment 1.

PROCEDURE

1. Make the following changes on attachment 1. Change C to E and E to C for the 550-LARC, hook-up connector (encoder No. 1).

2. Reference the corrected diagram below and make the following changes to D925-FD00l in AHOS Maintenance Note 13. Cross out the existing line from TB-1 pin 5 to SHAFT ENCODER NO. 1, pin E (PHASE 01). Draw a line from TB-1 pin 5 to SHAFT ENCODER NO. 1, pin C. Cross out the existing line from TB-1 pin 3 to SHAFT ENCODER NO. 1, pin C (VCC). Draw a line from TB-1 pin 3 to SHAFT ENCODER NO. 1, pin E.

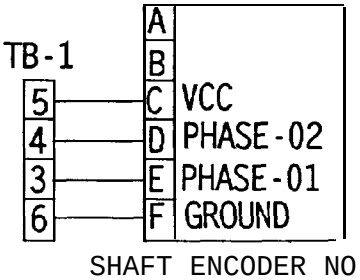

SHAFT ENCODER NO. 1

EFFECT ON OTHER INSTRUCTIONS

None.

J. Michael St. Clair
Chief, Engineering Division

PRELIMINARY

U.S. DEPARTMENT OF COMMERCE
National Oceanic and Atmospheric Administration
NATIONAL WEATHER SERVICE
Silver Spring, Md. 20910

W/OSO321 - BGM

September 9, 1986

TO: All NWS Regional Headquarters, Area Electronics Supervisors, and Electronics Technicians (EHB-10 Distribution)

FROM: W/OSO3 - J. Michael St.Clair

SUBJECT: Transmittal Memorandum for Engineering Handbook No. 10, Issuance 86-7

1. Material Transmitted:

Engineering Handbook No. 10, Hydrologic Equipment, Section 2.3, Maintenance Note No. 14: Replacement Procedure for the 436A Incremental Shaft Encoder Printed Circuit Board.

2. Summary:

This Maintenance Note provides instructions for removing and installing a Model 436A Incremental Shaft encoder repair kit.

3. Effect on Other Instructions:

None.

AHOS MAINTENANCE NOTE
(for Electronics Technicians)

14. Replacement procedure for the 436A Incremental Shaft Encoder Printed Circuit Board.

General

This maintenance note provides instructions for removal and replacement of the 436A incremental shaft encoder printed circuit board. The engineering division has determined that it would be more efficient and result in cost savings to the Government. The replacement printed circuit board can be ordered from EHB-1, NOAA Number D105-1A1.

Procedure

1. Remove side brackets (2 each) from 436A incremental shaft encoder by first removing screws (8 per side bracket). A Phillips screwdriver is required for removal of screws.

2. Remove the two screws with locking nuts located at the bottom side of the 436A incremental shaft encoder. The PCB should now be free.

3. Remove the four screws holding the 6 pin connector (14S-GP) in place. Remove PCB by sliding through connector hole.

4. Replace the PCB by sliding it back through the connector hole. Replace 6 pin connector and four screws.

5. Secure PCB into place by replacing two screws with lock nuts. Special care should be taken to replace insulators in proper position on screws between PCB and 436A incremental shaft encoder housing.

6. Replace two side brackets and secure with screws.

7. Reassembly of 436A incremental shaft encoder is now complete.

U.S. DEPARTMENT OF COMMERCE
National Oceanic and Atmospheric Administration
NATIONAL WEATHER SERVICE
Silver Spring, Md. 20910

W/OTS141 - BGM

August 30, 1986

TO: All NWS Regional Headquarters, Area Electronics Supervisors, and Electronics Technicians (EHB-10 Distribution)

FROM: W/OTS1 J. Michael St. Clair

SUBJECT: Transmittal Memorandum for Engineering Handbook No. 10, Issuance 86-6

1. Material Transmitted:

Engineering Handbook No. 10, Hydrologic Equipment, Section 2.3, Maintenance Note 15: Solar Panels and the ARC System.

2. Summary:

The following information is to clear up some confusion about solar panel hookup to the NWS ARC system.

3. Effect on Other Instructions:

None.

EHB-10
Issuance 86-6

AHOS MAINTENANCE NOTE NO. 15
(for Electronics Technicians)

15. Solar Panels and the ARC System

The Handar 540A has two (2) DC input ports. The first is called "SOLAR PANEL/BATT CHG". This port is used to charge the self-contained battery with a 13 to 18 volt source. It contains the voltage regulation and diode isolation circuitry. The second port is called "EX DC IN". This port is used when a second battery is connected to the ARC System and requires a voltage source between 11 and 15 volts. Voltage in excess of 16 volts will damage this port and the ARC regulator circuits. Internal circuitry within the 540A isolates these two ports.

NWS CONFIGURATIONS

1. ARC System using one battery (internal) and charging system with AC power. Connect the issued charger to "SOLAR PANEL/BATT CHG" port.

2. ARC System using one battery (internal) and charging system with solar power. Connect a solar panel (without solar panel voltage regulator) to "SOLAR PANEL/BATT CHG" port.

3. ARC System using two batteries, one internal and one external. Connect one solar panel (with solar panel regulator) directly to the external battery, then connect this battery to the "EX DC IN" port. Connect a second solar panel (with or without a solar panel regulator) to the "SOLAR PANEL/BATT CHG" port.

OPERATIONAL NOTES

In the two battery configuration (Item 3) above, the internal battery charge level will not be kept as high as that of the external battery when a regulated solar panel is used. However, this battery will maintain a sufficient level of charge to cover failure of the external battery. If an unregulated solar panel is used to maintain the charge level of the internal battery (through the "SOLAR PANEL/BATT CHG" port) both batteries should achieve the same charge level.

The 540A can be operated without the internal battery installed by using an external source through the "EX DC IN" port. The power source can be a 24AH battery or a suitable DC supply. This supply should have a current rating of at least 4 amperes if the GOES transmitter is going to be operated.

15. Solar Panel Installation on the ARC Systems

GENERAL

1. Summary:

This revision of Maintenance Note 15 affects all sections in the previous note.

2. Effect on Other Instructions:

Replace current Maintenance Note 15 with the revised edition. Also make pen-and-ink change to the index page.

3. Solar Panels and the ARC System:

The Handar 540A has two DC power input ports. The first is called "SOLAR PANEL/BATT CHG." This port, which incorporates a voltage regulator and diode isolation circuit, is used to charge the self-contained (internal) battery with a 13- to 18-volt regulated or unregulated power source. The second power port is called "EX DC IN." This port is used when a second battery (external) is connected to the ARC System and requires a regulated voltage source between 11 and 16 volts. Voltage in excess of 16 volts will damage the ARC circuits. Internal circuitry within the 540A isolates "these two ports.

PROCEDURE

1. NWS Configurations:

a. ARC System using one battery (internal) and charging system with an AC power source: Connect the issued charger to the "SOLAR PANEL/BATT CHG" port.

b. ARC system using one battery (internal) and charging system with a regulated or unregulated solar power source: Connect a solar panel (with or without voltage regulator) to the "SOLAR PANEL/BATT CHG" port.

c. ARC system using two batteries, one internal and one external: Connect the power source to the internal battery port as described in item a or b above. Connect the solar

panel (with solar panel regulator) directly to the external battery; then connect this battery to the "EX DC IN" port. Since the WSN P551 solar panel, which has a regulator, is no longer available to the NWS, a new solar panel has been procured to replace the P551. This new solar panel (Solarex Model SX20, WSN D900-1A1) does not have a regulator attached. However, a regulator may be purchased from the EHB-1 catalog using P/N WSN D900-1A1A2 if the external battery operation is used.

2. Operational Notes:

In the two-battery configuration (item c) above, the internal battery charge level will not be kept as high as that of the external battery when a regulated solar panel is used. However, this battery will maintain a sufficient level of charge to cover failure of the external battery. If an unregulated solar panel is used to maintain the charge level of the internal battery (through the "SOLAR PANEL/BATT CHG" port), both batteries should achieve the same charge level.

The 540A can be operated without the internal battery installed by using an external source through the "EX DC IN" port. The power source can be a 24 AH battery or a suitable DC supply. This supply should have a current rating of at least 4 amperes if the GOES transmitter is going to be operated.

J. Michael St. Clair
Chief, Engineering Division

U.S. DEPARTMENT OF COMMERCE
National Oceanic and Atmospheric Administration
NATIONAL WEATHER SERVICE
Silver Spring, Md. 20910

W/OSO321 - BGM

August 28, 1986

TO: All NWS Regional Headquarters, Area Electronics Supervisors, and Electronics Technicians (EHB-10 Distribution)

FROM: W/OSO3 - J. Michael St. Clair

SUBJECT: Transmittal Memorandum for Engineering Handbook No. 10, Issuance 86-4

1. Material Transmitted:

Engineering Handbook No. 10, Hydrologic Equipment, Section 2.3, Maintenance Note 16: Limited Automatic Remote Collector Programming Changes and Upgrades.

2. Summary:

The following describes programming changes in LARC firmware Rev 2.0b.

3. Effect on Other Instructions:

550A Hydrologger Manual, Appendix A, paragraph 2.1.

EHB-10
Issuance 86-4

AHOS MAINTENANCE NOTE
(For Electronics Technicians)

16. Limited Automatic Remote Collector Programming Changes and Upgrades.

The latest revisions in the firmware within the Limited Automatic Remote Collector (LARC) have caused changes in programming procedures.

I. Deletion of a Channel No Longer Required in the Program Set.

To remove a previously programmed channel in the LARC, place the unit in program mode after connecting the system to either the TI-707 or 545A Programming Set. Select the channel to be deleted by pressing the "M" (CH #) command on the 707, followed by the channel number. If the 545A Programming Set is used, select the keys listed above in parentheses. Don't forget to press RETURN. To access the sensor prompts, press the "N" (MEAS) key. The words "sensor type" followed by the sensor type code will appear on the printer. The sensor type will be any number between 01 and 04, depending on the previous selection. Enter "0" at this point and depress the RETURN key. The undesired channel has now been removed. To check to see if the channel has been deleted, do a "Control D" command for a copy of the program. (Note: This is not possible to do on the 545A Programming Set.)

II. Reversing the Encoder Direction by Programming.

HANDAR has removed the jumpers that appeared on some earlier LARC circuit boards that allowed us to change the encoder wires, and hence the encoder direction. To compensate for this change, the encoder direction is now handled by programming the direction desired. This change appears in all software revisions (2.0b and above) that are presently being used by the NWS regardless of the circuit board installed in the LARC.

This LARC program addition is accomplished by entering the unit programming mode, selecting the desired channel, and scrolling down to the "value/increment" prompt. At this point it is assumed that the encoder direction needs to be reversed. Program this prompt exactly as follows: "-0.01" for stage or "-0.10" for precipitation; do not forget to press the RETURN key. Next enter current stage value (XX.XX) or current precipitation value (XX.X0) followed by the RETURN key. Check the encoder

direction to see if the count is reversed. If the HANDAR 545A programming set is used, the above changes can be programmed in the same manner.

Normal encoder directions will be programmed as done previously.

U.S. DEPARTMENT OF COMMERCE
National Oceanic and Atmospheric Administration
NATIONAL WEATHER SERVICE
Silver Spring, Md. 20910

W/OTS141 - BGM

August 29, 1986

TO: All NWS Regional Headquarters, Area Electronics Supervisors, and Electronics Technicians (EHB-10 Distribution)

FROM: W/OTS1 - J.Michael St. Clair

SUBJECT: Transmittal Memorandum for Engineering Handbook No. 10, Issuance 86-5

1. Material Transmitted:

Engineering Handbook No. 10, Hydrologic Equipment, Section 2.3, Maintenance Note 17: 545A Programming Set and Firmware (Rev. 7.0),

2. Summary:

This Maintenance Note is for information on the alphanumeric overlay and 545A firmware (Rev 7.0).

3. Effect on Other Instructions:

None.

EHB-10
Issuance 86-5

AHOS MAINTENANCE NOTE NO. 17
(For Electronics Technicians)

17. 545A Programming Set and Firmware (Rev. 7.0)

Summary of Changes:

The 545B alphanumeric overlay complements the latest firmware (Rev. 7.0) of the 545A programming set. The 545B alphanumeric overlay is to be used in conjunction with the 545A programming set when the "alpha" mode is used (the alpha mode is accessed by pressing the "F3" key once). This overlay enables the user to view the proper alphanumeric symbols while in the alpha toggle, and thus send the proper corresponding ASCII characters. The main purpose of this latest revision in firmware is to provide the technician with an increased alphanumeric display due to the added "G" and "H" symbols. This revision is required when the technician must enter an ID code that contains either a "G" or an "H".

Also, the latest revision in firmware (7.0) changes the purpose of the "F2" key on the 545A programming set. Previously, this key was used to access the voice output mode when the 545A programming set was connected to the Handar 540A Data Collection Platform (DCP). Currently, due to the latest revision, the voice output mode is accessed by pressing the "F1" key. The F2 key becomes an alternate key used if there are "canned" EPROM programs installed,

Details:

The current revision of the firmware for use in the 545A programming set is Rev. 7.0. This revision brings the function key assignments in line with those same key positions on the new Handar 545B programming set and adds some of the same 545B functions such as the capability of sending control characters and the entire alphabet.

This revision changes the function keys (F1, F2, F3, and F4) as follows:

The F1 key will transmit an ASCII space (the same as the space bar on a terminal keyboard). When connected to a Handar DCP, pressing the F1 key will cause the DCP to reply with the prompt "P VOICE OUTPUT MODE 00," which then allows programming of the voice functions of the DCP. [When connected to a DCP that doesn't have voice capability, such as a 540A with a 2K CPU board installed, an error message will result).

The "F2" key becomes the alternate key which has only one useful function in the 545A. If you have "canned" EPROM programs installed, these are now accessed by pressing the "F2" key and then the "TEL" key. Unless you have toggled to the alpha mode with the F3 key, you must then press the log key (which is now the L key) after you press the F2 (ALT) key.

The F3 key becomes the alpha toggle. In other words, when the F3 key is pressed, the ASCII character transmitted when the other keys are pressed is changed. The programming set may now be used as a regular terminal. Since most of the keys are changed after the alpha toggle (F3) key is pressed, it is recommended that the ALPHANUMERIC OVERLAY be placed over the keys so that the new key designations will be obvious. Pressing the F3 key a second time will make the keys revert back to their original designations.

CAUTION: If the F3 key is inadvertently pressed while programming, the keys will no longer serve the intended functions. To recover, you must press the F3 key again or disconnect and reconnect the 545A programming set.

The F4 key is the control key. This key is not used in the same way the control key on a regular terminal or computer would be used. Instead, to transmit a control character from the programming set, you must first press the F4 key and release it. The next key pressed will be a control character.

The revision 7.0 firmware is supplied on two 2532 EPROMS. These are marked 545A4 and 545A5. 545A4 must be installed in EPROM socket #4 and 545A5 must be installed in EPROM socket #5. If you have 24 pin EPROM sockets in your programming set, the new EPROMS are simply plugged into the proper sockets after removing any EPROMS that may already occupy these sockets. The original EPROM from socket #5 is not reinstalled. If there is an EPROM installed in socket #4, it probably contains a "canned" program and may be reinstalled in any other open socket.

If your version of the 545A programming set has 28 pin EPROM sockets, the 24 pin 2532 EPROMS will work. You must plug them into the 24 socket pins farthest away from the socket notch. The EPROM notch remains in the same direction as the socket notch.

U.S. DEPARTMENT OF COMMERCE
National Oceanic and Atmospheric Administration
NATIONAL WEATHER SERVICE
Silver Spring, Md. 20910

W/OS0321 - BGM

March 11, 1987

TO: All NWS Regional Headquarters, Area Electronics Supervisors, and Electronics Technicians (EHB-10 Distribution)

FROM: W/OSO3 - J. Michael St. Clair

SUBJECT: Transmittal Memorandum for Engineering Handbook No. 10, Issuance 87-l

1. Material Transmitted:

Engineering Handbook No. 10, Hydrologic Equipment, Section 2.3; Maintenance Note 18: Connection of a TI 707 RS232 modem.

2. Summary:

This maintenance note provides instructions for the requisition and use of a TI 707 RS232 modem (P/N D925-2A1) that connects to a TI 707 KSR data terminal.

3. Effect on Other Instructions:

None.

EHB-10
Issuance 87-1

TI707 RS232 MODEM BLOCK DIAGRAM

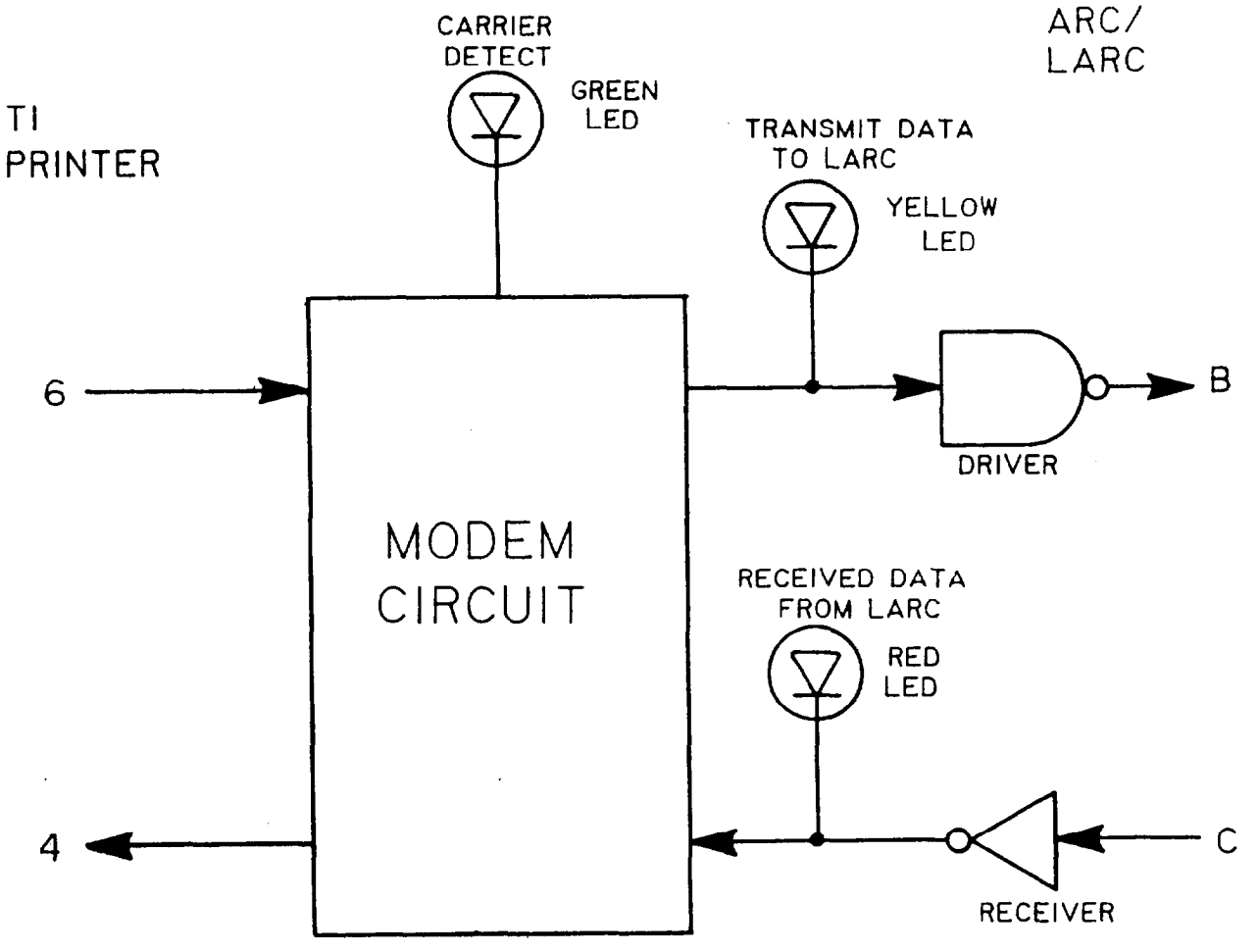

FIG 1

AHOS MAINTENANCE NOTE
(for Electronics Technicians)

18. Connection of a TI 707 RS232 Modem

The Engineering Division has designed and built a device that allows the use of the TI 707 KSR data terminal with our Automatic Remote Collector (ARC) and the Limited Automatic Remote Collector (LARC) through their communication ports. This is very useful, for it allows the ARC systems to have a hard copy of the installed program.

a. Connection of the TI 707 RS232 Modem to the TI 707 KSR Data Terminal

The TI 707 RS232 Modem connects between the TI 707 KSR Data Terminal communications connector ACST/CP:R (located on the back of the terminal) and the 12-pin program I/O connector on the ARC or LARC.

CAUTION

Make sure the power switch is OFF on the TI 707 KSR Data Terminal before connecting the TI 707 RS232 Modem.

The TI 707 RS232 modem can be physically fastened to the left side of the TI 707 KSR Data Terminal (as you face the keyboard) using the velcro strips provided. This is accomplished by removing the protective paper from the velcro strips and fastening the TI 707 RS232 Modem approximately one inch from the rear of the TI 707 KSR data terminal. The LED displays must be oriented toward the top of the TI KSR data terminal.

b. TI 707 RS232 Modem Operation

Operation of this unit is totally automatic. Power to the TI 707 RS232 Modem is derived from the TI 707 KSR data terminal. The LED display functions are described on the face of the unit for easy use:

GREEN----------T1 CARRIER DETECT
RED----------REC. DATA FROM LARC
YELLOW----------TRANS. DATA TO LARC

The green LED will light when the terminal power switch is on. This indicates the TI 707 RS232 Modem has detected the carrier produced by the terminal. The green LED identified as LINE RDY on the TI 707 KSR terminal indicates that the terminal has detected the carrier produced by the TI 707 RS232 Modem. The red LED indicates that RS232 keyed data is coming from the ARC or LARC to the

terminal. This LED will flicker as the ARC or LARC transmits its data to the terminal. The yellow LED indicates the RS232 keyed data flow in the reverse direction. This LED will flicker as the terminal transmits in response to your typing on the TI 707 KSR data terminal keyboard.

The TI 707 RS232 Modem can be ordered from NLSC. The catalog number is D925-2A1. This unit is not a repairable item and will be replaced as a whole unit.

ENGINEERING HANDBOOK 10 SECTION 2.3
MAINTENANCE NOTE 19 (for Electronics Technicians)
Engineering Division
W/OSO321:BGM

Limited Automatic Remote Collector (LARC) Repair Philosophy After a Failure

General

1. This maintenance note informs electronics technicians of the repair philosophy for the LARC system after a failure due to lightning, vandalism, flood, or unit component failure.

2. Effect on Other Instructions: None.

Procedure

Past outages for the LARC system have been due to a number of causes such as lightning, floods, vandalism, and unit component failure. To improve repair and logistics delay times a complete system (minus battery and cables) is being stocked in the LSS inventory at NLSC. A complete LARC unit should be ordered to repair a site with a failure resulting from lightning, vandalism, flood, or a component within the LARC unit.

The battery, solar panel, and encoders required for the LARC system can be ordered from the "D" section in EHB-1. If there are any cable failures, notify the Hydro SPL, FTS 427-7835 for replacement, as these are not presently stocked at NLSC.

Only stations that have LARC systems may order a complete LARC unit to repair a site that has been damaged by lightning, vandalism, flood, or a component failure with the LARC system. This order must be approved by the Regional Headquarters.

Until EHB-1 is updated, use the following part number.

WSN	DESCRIPTION	NSN
D925	LARC SYSTEM, SOLID STATE, BATTERY-OPERATED (MEASURES, STORES, AND MONITORS WATER LEVEL AND RAINFALL); REMOTELY ACCESSED VIA TELEPHONE NETWORK OR THROUGH USE OF A VOICE SYNTHESIZER FOR DATA COLLECTION	6660-00-309-3090-X

for J. Michael St.Clair William J. Von Ildt
Chief, Engineering Division

Maintenance Note 20 (for Electronics Technicians)
Engineering Division
W/OSO321:BGM

Automatic Remote Collector (ARC) Correction to Drawing in the Operating and Service Manual

General

1. This maintenance note informs the electronics technician of a correction to the serial data interface drawing 560-2004. At J2, pin 2 should read 100Hz clock instead of 2100Hz clock.

2. Effect on Other Instructions: None.

Procedure.

All holders of the Handar "Operating and Service Manual" for the DCP 540 are to remove page A12-18 and replace with the corrected drawing provided with this maintenance note.

J. Michael St.Clair
Chief, Engineering Division

Issuance
88-4 8-8-88

REVISIONS			
LTR	DESCRIPTION	DATE	APPROVED
A			

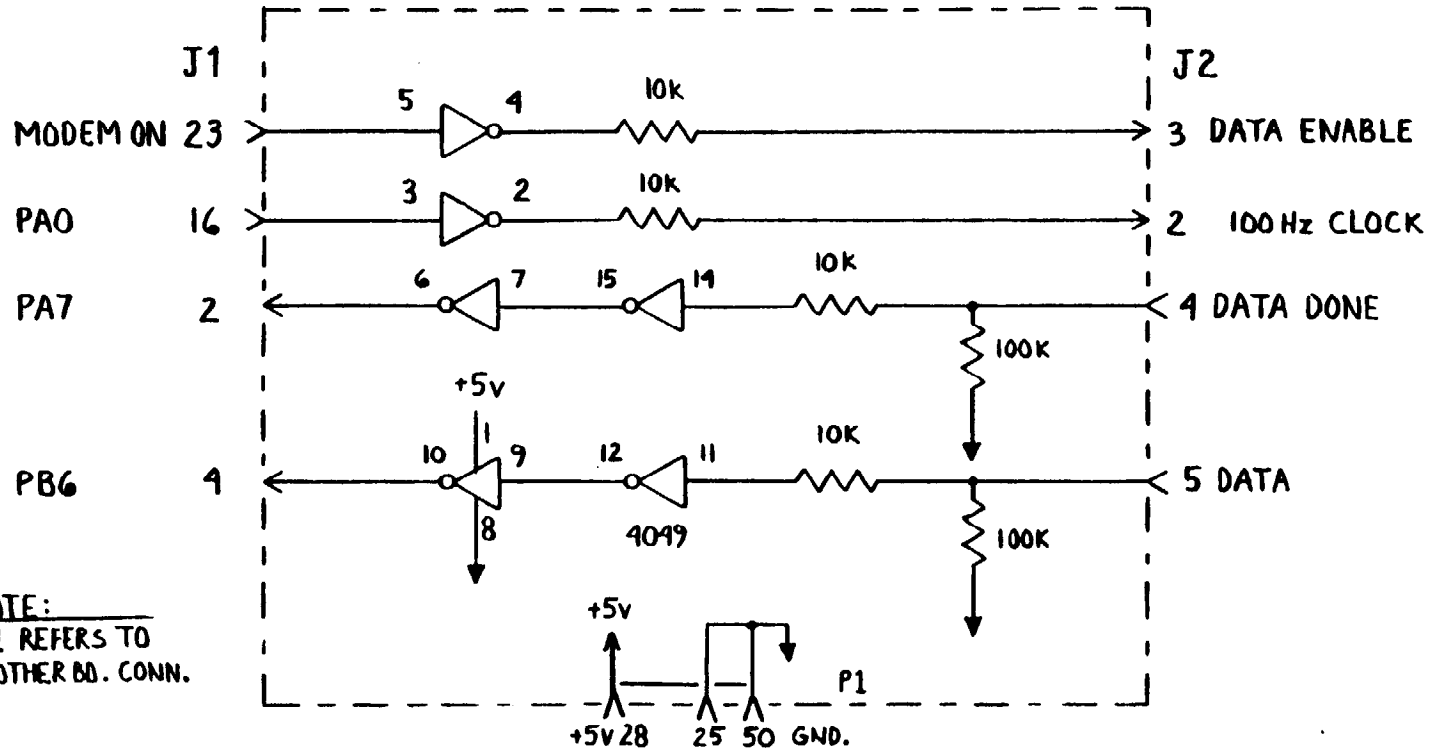

NOTE:
P1 REFERS TO
MOTHER BD. CONN.

UNLESS OTHERWISE SPECIFIED DIMENSIONS ARE IN INCHES TOLERANCES ARE: FRACTIONS ± DECIMALS .XX ± .XXX ± ANGLES ±	CONTRACT NO.	HANDAR	
	APPROVALS / DATE		
	DRAWN K. HAGGSTROM 4/3/83	SERIAL DATA INTERFACE	
MATERIAL	CHECKED		
FINISH		SIZE A	CODE IDENT NO. / DRAWING NO. 560-2004
USED ON			
APPLICATION	DO NOT SCALE DRAWING	SCALE	SHEET / OF /

BISHOP GRAPHICS, INC.
REORDER NO. 20502

MAINTENANCE NOTE 21 (for Electronics Technicians)
Engineering Division
W/OSO321:BGM

Automatic Remote Collector (ARC) Replacement Microprocessor Card for the ARC Satellite or RAMOS/S System

General

1. This maintenance note is to inform the electronics technician of a replacement microprocessor card for the ARC system. The Handar P/N 540-6003 microprocessor card is obsolete and no longer being manufactured by Handar. The replacement for the obsolete card will be the Handar P/N 540-6016P Microprocessor card.

2. Effect on Other Instructions: None.

Procedure

All replacement microprocessor cards for the ARC satellite and RAMOS/S systems will use the Handar P/N 540-6016P with rev 4.F or 4.I EPROMS. This card is interchangeable with the satellite, telephone, and RAMOS/S systems. Order WSN D900T-1A2, NSN 5999-01-196-2125, EHB-1, Section D for a replacement microprocessor card.

J. Michael St. Clair
Chief, Engineering Division

Maintenance Note 22 (for Electronics Technicians)
Engineering Division
W/OSO321:BGM

Limited Automatic Remote Collector (LARC) Handar Firmware Revision 2.8

General

1. The new LARC system being manufactured by Handar has Revision 2.8 firmware installed on the microprocessor card. This revision is acceptable and does not affect the National Weather Service (NWS) mission. Therefore, an updated firmware revision is not required for all LARC systems now deployed.

2. Effect on Other Instructions: None

Procedure

This maintenance note is to inform the electronics technician that a LARC system with Revision 2.8 firmware on the microprocessor card is acceptable for NWS use. At this time, it is not necessary to-change the existing firmware for LARC systems already in the field. In the future, all new and repaired LARC systems will have the upgraded firmware.

The firmware change to the LARC system was made for users that do not interrogate the system for a period of 30 days. These users who interrogate the system only once every 30 days will lose a scan line of data if firmware other than Revision 2.8 is installed on the microprocessor card. The problem of lost data is corrected when Revision 2.8 is used. NWS stations do not encounter this type of problem since the LARC system is interrogated daily.

J. Michael St. Clair
Chief, Engineering Division

AUTOMATIC HYDROLOGIC OBSERVING SYSTEMS
MAINTENANCE NOTE 23 (for Electronics Technicians)
Engineering Division
W/OSO321:BGM

Hydrologic and Surface Lightning Protection Device Upgrade

General

1. As a result of tests conducted on various lightning protection devices by the Equipment Test & Evaluation Branch, a decision was made to delete the D870-2-1 line spike eliminator from stock. An improved replacement line spike eliminator has been selected which provides better protection for the NWS Hydrologic and Surface equipment that interface to telephone lines.

2. Effect on Other Instructions: Refer to Engineering Handbook No. 5, Maintenance Note 42, Section 3.2. On page 2, line 1, delete the reference to National Weather Service Stock No. D870-2-1 and change to 017-A-7.

Procedures

1. The replacement line spike eliminator is available from the National Logistics Supply Center and is listed in Engineering Handbook No. 1 (017-A-7). The device does not require any modification to equipment or telephone line wiring.

2. Follow the lightning protection grounding guidelines in the Engineering Handbook No. 3-11A manual when installing this device. For copies of these guidelines, check with your regional headquarters or contact Larry Hill, FTS 427-7839.

3. This device must be earth-grounded with the ground wire provided, or it does not protect the equipment. An installation diagram and telephone cable are also provided with each device.

J. M. St. Clair

J.Michael St. Clair
Chief,Engineering Division

MAINTENANCE NOTE 24 (for Electronics Technicians)
Engineering Division
W/OSO321:BGM

Replacement LARC System for DARDC Equipment

1. General

Logistics support for the Device for Automatic Remote Data Collection (DARDC) will no longer be available after September 30, 1990. However, support will continue for the marine DARDC wind system using the telephone (MWT) and the marine DARDC wind temperature system using a radio (MWR). This means only stations with MWT and MWR systems can requisition parts from the catalog (EHB-1).

2. Effect on Other Instructions

None.

Procedure

The program office requests each region to verify that each DARDC system in their region has been replaced with a LARC system. If there are DARDC systems that require a LARC system, please inform the Basic Observations System Program Leader, Bob McCormick, W/OSO321, (FTS 427-7835). As soon as we receive your response, we will ship the LARC system to your site. Include in your information the type sensor and whether a solar panel is needed for the site installation.

After installation of a site, please report the deactivation of equipment removed and activation of the LARC replacement equipment on WS Form H-28.

Robert R. Kidd
for J. Michael St. Clair
Chief, Engineering Division

MAINTENANCE NOTE 24 (for Electronics Technicians)
Engineering Division
W/OSO321:BGM

Replacement LARC System for DARDC Equipment

1. General

Logistics support for the Device for Automatic Remote Data Collection (DARDC) will no longer be available after September 30, 1990. However, support will continue for the marine DARDC wind system using the telephone (MWT) and the marine DARDC wind temperature system using a radio (MWR). This means only stations with MWT and MWR systems can requisition parts from the catalog (EHB-1).

2. Effect on Other Instructions

None.

Procedure

The program office requests each region to verify that each DARDC system in their region has been replaced with a LARC system. If there are DARDC systems that require a LARC system, please inform the Basic Observations System Program Leader, Bob McCormick, W/OSO321, (FTS 427-7835). As soon as we receive your response, we will ship the LARC system to your site. Include in your information the type sensor and whether a solar panel is needed for the site installation.

After installation of a site, please report the deactivation of equipment removed and activation of the LARC replacement equipment on WS Form H-28.

Robert R. Kuhl
for J. Michael St. Clair
Chief, Engineering Division

AUTOMATIC HYDROLOGIC OBSERVING SYSTEM (AHOS)
MAINTENANCE NOTE 25 (for Electronics Technicians)
Engineering Division
W/OSO321:BGM

Addition of Microprocessor Board for Automatic Remote Collector (ARC)

General

1. The Handar microprocessor card P/N 540-6016P is no longer manufactured by Handar. The National Weather Service (NWS) will still repair and stock P/N 540-6016P until the existing supply is exhausted.

A new microprocessor card (P/N 540-6039) is a direct replacement for P/N 540-6016P. It has 48K of ROM on one chip and 8K of RAM. It can be used in the D900S, D900T and the RAMOS/S systems. This board incorporates some new features so it can be used with a smart sensor interface or a WWV receiver. These features are not used by NWS.

2. Effect on Other Instructions: Some prompts that are unfamiliar to NWS users may appear. Leave these values at their default settings and just scroll through.

Examples: XMT WINDOW SIZE defaults at 00:01:00
WWV SYNC TIME defaults at 00:00:00

Procedure

All ARC satellite, ARC telephone, and RAMOS/S systems will continue to use the microprocessor card Handar P/N 540-6016P or P/N 540-6039. The Handar microprocessor P/N 540-6039 is interchangeable with all NWS ARC systems. When ordering a replacement microprocessor card, use ASN D900T-1A2, NSN 5999-01-2125.

J. Michael St. Clair
Chief, Engineering Division

Programming the Automatic Remote Collector (ARC) for Random Transmission

GENERAL

National Weather Service (NWS)-owned ARC systems are predominantly programmed for self-timed transmissions. Such transmissions occur normally every 4 or 6 hours for an interval of 1 minute duration. A self-timed ARC is expected to transmit any time during its assigned minute but not to infringe upon adjacent time slots. Most ARCs are programmed to report precipitation and river stage. NWS electronics technicians have the Handar Model 545 programming test set or other ASCII data terminal to program the ARC system. Programming the ARC can only be done in the program (PROG) mode.

Background

The National Environmental Satellite, Data, and Information Service (NESDIS) allocates channels and time slots for transmission of self-timed data and for the transmission of random data. The Geostationary Operational Environmental Satellite (GOES) has more than 100 radio channels for transmission of data from Data Collection Platforms (DCP). Most channels used for self-timed transmission of hydrometeorological data are set up so that each ARC transmits once every 6 hours. This enables each channel to collect data from 240 DCPs (1 minute per DCP - 60 minutes per hour - every 4 or 6 hours).

NESDIS has established channels for transmission of random data. The primary rule for random transmissions is that they may not be activated by time. A principal feature of ARCs is that they are designed to conserve power. Consequently, the only part of the ARC that is active continuously (consuming only a very small amount of power) is the clock. When the clock powers up the ARC, according to the way it is programmed, readings are sequentially taken from the sensors and checked against the random transmission criteria. If the random transmission criteria are exceeded, the ARC prepares itself for a random transmission. However, since NESDIS forbids random transmissions by the clock and the clock has been set to power up the ARC on a precise and regular interval, each ARC must generate a random number (for our purposes, say the random number is in seconds). This random number is counted down before the random transmission. This is the feature that inhibits multiple ARCs (on a given channel) from transmitting at the same time and colliding with one another. NESDIS's second rule for random transmissions is the amount of time that each ARC can transmit per day. This is called the "unit loading rule." Each ARC is allocated one minute of random transmission time per day. On average, each random transmission will take about 2.5 seconds. Care must be taken to use the random capability effectively.

However, NESDIS allows owners to share the unit load rule among its other ARCs. For example, if the NWS owns 70 ARCs, the NWS has 70 unit loads that can be used (and shared with other NWS ARCs) each day. Taking into account the above constraints and the fact that not all of the country will experience active hydrometeorological conditions simultaneously, knowledge and reasonable care in programming ARCs normally will suffice to stay within the NESDIS rules.

Even with the generation of a random number before transmission, random transmissions can occur at any time from other ARCs. There remains the possibility that two or more ARCs (assigned to a given channel) could transmit at the same time. For this reason, random transmissions should be as short as possible and consideration should be given to repeating the transmission later. Such options by the user increase the chance that data transmitted randomly will pass successfully through the system from the ARC to the end user.

The ARC systems are versatile and can be programmed in dual mode to transmit data in both the self-timed mode and randomly when criteria are exceeded. The NWS has set no rules for either self-timed or random data transmission, except those that NESDIS requires. These NESDIS conditions are met since ARCs used with GOES must be certified by the manufacturer. Other DCPs also must pass these conditions. The rules imposed by NESDIS on manufacturers fall into two categories. For self-timed data transmissions, the data transmission format must be in either ASCII or pseudobinary. For random data transmissions, the data format must be in pseudobinary. Normally, users (NESDIS refers to users as users of the GOES system, which is synonymous with owners of the ARCs) program their ARCs in ASCII for self-timed transmissions because little or no processing is required to read the message. Some users program their DCPs in pseudobinary for self-timed transmissions to pack the data more efficiently, which allows more data to be transmitted in the 1-minute time slot. All users must transmit their random data in pseudobinary. Manufacturers have prevented users from transmitting data in any other manner, per the NESDIS rule. This minimizes the length of each random transmission.

REQUIREMENTS

The NWS has not yet established any guidelines for programming ARCs. To meet the goals of modernized NWS operations, changes are needed to the AHOS ARC systems so data will be available in a timely fashion. The NWS needs precipitation data to support the WSR-88D precipitation processing system. The WSR-88D provides an hourly digital precipitation product. Since self-timed GOES ARC precipitation data are only available every 4 to 6 hours, a design has been developed to get random reports of precipitation data from AHOS satellite sites. This design uses the random reporting capability of the ARCs to supplement the transmission of data every 4 to 6 hours. Program examples A and B provide the necessary information to meet the requirements of the WSR-88D precipitation processing system. If there are two sensors programmed for random transmission, the precipitation sensor should always be programmed to report first, as in the example.

General Objectives

NESDIS has authorized all NWS AHOS ARCs to transmit data both routinely and randomly. All ARC systems currently are programmed to transmit data in the self-timed mode, but only a few are programmed to transmit data randomly. How they are programmed varies from location to location. The aim of this maintenance note is to program all NWS-owned ARCs the same so: (1) the format of both the self-timed and random data are consistent for all ARCs, and; (2) the criteria programmed into all ARCs are consistent so data are available when needed for hydrometeorological data processing.

In an agreement with NESDIS and the users of GOES, the NWS collects data not only from ARCs but also from more than 5,000 other DCPs. The system that processes these data and forwards the data to field offices is the Hydrometeorological Automated Data System (HADS). HADS is managed and operated by the Office of Hydrology. Programming all ARCs so the format of the data (both self-timed and random) processed by HADS is standardized and the random criteria are consistent will increase the efficiency of data processing and increase its utility to field users.

RANDOM DATA TRANSMISSIONS

ARCs take observations on a routine basis according to the way they are programmed. This is the measurement interval (R01 MEAS INTERVAL, Example A, line 29) prompt that is specified when programming an ARC. This interval is also the interval between the data values that are transmitted. It is possible to specify different measurement intervals for different sensors. The ARC is essentially in a sleep state between measurement intervals. During that time, only the clock is operating. Once the clock wakes up the ARC, a routine measurement is taken. The data are first stored in a register for later self-timed transmission. Then the data are compared against the criteria to see if the criteria have been exceeded. If so, the ARC goes into random transmission mode.

One situation should be recognized. If an ARC were programmed to sample river stage, say, every hour on the hour, and a flash flood approached the gauge at 5 minutes after the hour, the flash flood could wipe out the gauge and carry it down the river before the stage could be sensed. This is because the ARC is not programmed to "wake up" and sense river stage until the next hour (55 minutes after the flash flood approached the gauge). In this case, no data would be sent because the ARC is still asleep being washed down the river with the flash flood.

Random Reporting Criteria

There are four types of criteria that can be programmed into the Handar 540 DCP. These are explained below.

(1) HIGH LIMIT Specifies the high value of the sensor reading that will trigger a random transmission.

This feature could be used for river stage or for something like temperature. When used for river stage, the most likely candidates are those in headwater locations where a given rise in the river will likely return to a lower level within a few hours. If a value of, say, 25.00 (feet) were programmed into the ARC, every time a routine observation were taken it would be checked against the HIGH LIMIT value (25.00). If the routine observation exceeded the programmed HIGH LIMIT, a random transmission would be sent twice (refer to line 11 of program example C) within 5 minutes after the observation had been taken (line 12) with a header of "00" (line 09) identifying the configuration to allow automatic decoding. If an established downlink facility is used for the decoding, the facility will provide the code. This capability should be used with caution. If a sensor has the possibility of staying above a high limit value for an extended time, excessive random transmissions will result.

(2) LOW LIMIT Specifies the low value of the sensor reading that will trigger a random transmission.

This feature would normally be used for a water stage recorder located behind a reservoir. Another candidate might be battery voltage, if set at a value of 10.0 volts. This is the exact opposite to the HIGH LIMIT method. For instance, if the stage value were set at 01.00, a random transmission would be sent whenever the river stage dropped that low.

(3) HIGH DIFF LIMIT The high differential limit specifies the amount of increase in the sensor reading since the last routine observation that will trigger a random transmission.

This feature would normally be used for either an increasing river stage or precipitation. This feature for river stage is more powerful than using the HIGH LIMIT feature. This is a rate of change (increase) and, consequently, the value programmed for a given sensor is also dependent on the measurement interval for that sensor. Note in program example A (line 35) that a value of 00.05 (inch) has been programmed for the tipping bucket precipitation gauge sensor (sensor channel 1) and the measurement interval (line 29) is 30 minutes. Strictly speaking, this is a rate of 0.05 inch in 30 minutes which is not the same as 0.10 inch an hour). Note in program example B (line 35) that a value of 00.10 (inch) has been programmed for the Fischer & Porter (F&P) precipitation gauge (sensor channel 1).

(4) LOW DIFF LIMIT This specifies the decrease in the sensor value from the last routine reading that will trigger a random transmission.

Typical applications for this feature could be a water level observation at a dam or temperature readings in a fruit orchard. Like the low limit, this is the exact opposite to the high differential limit method.

Determining Random Criteria for River Stage

NWS service hydrologists are responsible for management of hydrologic data collection. These individuals should be consulted before programming ARCs to transmit river stage data randomly. The service hydrologist will coordinate

with the appropriate River Forecast Center. They will provide the electronics technicians with the appropriate number(s) to use to program ARCs for HIGH DIFF LIMIT. In general, these numbers will be higher for rivers that rise and fall rapidly than the numbers for large rivers. For example, the Mississippi River at New Orleans would seldom be expected to rise from runoff at a rate of 1 foot per hour, while some small rivers could easily rise at a rate of 2 to 4 feet per hour. RFC hydrologists will provide technical assistance to the service hydrologists in this area.

PROCEDURE

Program each ARC system for self-timed and random reporting at the next regular visit. Use the Example A and B programs included in this maintenance note. At some sites the program will need to deviate to reflect the proper precipitation sensor type (for example, a tipping bucket gauge vs. an F&P weighing gauge). However, this deviation will not cause a change in the format of the data. Upon completion of the ARC system programming, verify that the program is working. To verify, trigger an event by moving the tipper on the tipping bucket or adding enough liquid to the F&P gauge so the programmed High Diff Limits are exceeded and a random transmission is generated. It may take up to 30 minutes before transmission occurs. Then call Larry Cedrone of the Office of Hydrology (301 713-0624) to verify that the program is operational.

Self-timed Transmissions

The program shown in Example A and B contains information on random data transmission as well as self-timed data transmissions. Line 09 of the program describes that the secondary transmission mode (for random data transmissions) has been selected as 21. Handar defines this as the "emergency random" feature. Furthermore, when the ARC transmits in this mode, it will transmit a header of "00" (Handar defines the entry of "21" in line 09 to mean that a header of "00" will be transmitted) and it will transmit twice (line 10) within a maximum of 5 minutes (line 11) after the observation has been taken that exceeds the criteria programmed into the ARC. This 5-minute time (300 seconds) is the maximum value of the random number that will be generated, which must be counted down before transmission. This example is for an ARC that has both a precipitation sensor and a river gauge sensor. The precipitation sensor is a tipping bucket.

EXAMPLE A

1	R	HANDAR 540A DCP -	REV 3.8	Program example is shown in the
2	R	ID	15D5CF58	run mode.
3	R	STATION TIME	17:28:55	
4	R	YEAR (XX)	99	
5	R	DCP JULIAN DATE	316	
6	R	GOES PRI XMT MODE	02	
7	R	1ST GOES XMT TIME	19:0l:00	Time slot assigned by NESDIS
8	R	PRI XMT INTERVAL	06:00:00	Time interval assigned by NESDIS
9	R	GOES SEC XMT MODE	21	
10	R	SEC XMT HEADER	00	
11	R	# OF XMISSION	02	
12	R	RANDOM XMT INTVL	00:05::00	
13	R	TEL # AREA CODE	0-000	
14	R	TEL # LOCAL	000-0000	
15	R	MODEM XMT FORMAT	00	
16	R	1ST DIAL TIME	00:00:00	
17	R	DIAL INTERVAL	00:00:00	
18	R	TEL, EMG XMIT 1=ON	00	
19	R	AUTO DUMP? 1=Y 0=N	00	
20	R	1ST LOG TIME	00:00:00	
21	R	LOG INTERVAL	00:00:00	
22	R	DRIVE MODE	00	
23	R	LOG MODE	00	
24	R	CHANNEL NO.	01	Sensor channel 1 Precipitation
25	R01	SENSOR TYPE	07	Tipping Bucket
26	R01	CARD SLOT #	.02	
27	R01	*VALUE PER TIP	00.01	
28	R01	CURRENT VALUE	IO.26	
29	R01	MEAS INTERVAL	00:30:00	
30	R01	START OF MEAS	17:31:00	
31	R01	LEVEL I MEAS TYPE	001	
32	R01	XMIT 2 OR 3 BYTES?	02	
33	R01	HIGH LIMIT	NO LIMIT	
34	R01	LOW LIMIT	NO LIMIT	
35	R01	HIGH DIFF LIMIT	00.05	
36	R01	LOW DIFF LIMIT	NO LIMIT	
37	R	CHANNEL NO.	03	Sensor channel 3 is River Stage
38	R03	SENSOR TYPE	11	
39	R03	CARD SLOT #	02	
40	R03	o=cw+ , 1=ccw+	00	
41	R03	*VALUE /INCREMENT	00.01	
42	R03	CURRENT VALUE	01.95	
43	R03	MEAS INTERVAL	00:30:00	
44	R03	START OF MEAS	17:31:00	
45	R03	LEVEL I MEAS TYPE	001	
46	R03	XMIT 2 OR 3 BYTES?	03	
47	R03	HIGH LIMIT	25.00	
48	R03	LOW LIMIT	NO LIMIT	
49	R03	HIGH DIFF LIMIT	NO LIMIT	
50	R03	LOW DIFF LIMIT	NO LIMIT	
51	R	CHANNEL NO.	05	Sensor channel 5 is Battery Voltage
52	R05	SENSOR TYPE	12	Do not program for Random
53	R05	MEAS INTERVAL	01:00:00	Transmission
54	R05	START OF MEAS	17:31:00	
55	R05	LEVEL I MEAS TYPE	001	
56	R05	XMIT 2 OR 3 BYTES?	02	
57	R05	HIGH LIMIT	NO LIMIT	
58	R05	LOW LIMIT	NO LIMIT	
59	R05	HIGH DIFF LIMIT	NO LIMIT	
60	R05	LOW DIFF LIMIT	NO LIMIT	

EXAMPLE B

1	R	HANDAR 540A DCP -	REV 3.8	Program example is shown in the
2	R	ID	15D5CF58	run mode.
3	R	STATION TIME	17:28:55	
4	R	YEAR (XX)	99	
5	R	DCP JULIAN DATE	316	
6	R	GOES PRI XMT MODE	02	
7	R	1ST GOES XMT TIME	19:01:00	
8	R	PRI XMT INTERVAL	06:00:00	Time slot set by NESDIS
9	R	GOES SEC XMT MODE	21	
10	R	SEC XMT HEADER	0 0	
11	R	# OF XMISSION	02	
12	R	RANDOM XMT INTVL	00:05::00	
13	R	TEL # AREA CODE	0-000	
14	R	TEL # LOCAL	000-0000	
15	R	MODEM XMT FORMAT	00	
16	R	1ST DIAL TIME	00:00:00	
17	R	DIAL INTERVAL	00:00:00	
18	R	TEL, EMG XMIT 1=ON	00	
19	R	AUTO DUMP? 1=Y 0=N	00	
20	R	1ST LOG TIME	00:00:00	
21	R	LOG INTERVAL	00:00:00	
22	R	DRIVE MODE	00	
23	R	LOG MODE	00	
24	R	CHANNEL NO.	01	Sensor Channel 1 Precipitation
25	R01	SENSOR TYPE	06	F&P weighing rain gauge
26	R01	CARD SLOT #	02	
27	R01	*VALUE PER TIP	00.10	
28	R01	CURRENT VALUE	10.26	
29	R01	MEAS INTERVAL	00:30:00	
30	R01	START OF MEAS	17:31:00	
31	R01	LEVEL I MEAS TYPE	001	
32	R01	XMIT 2 OR 3 BYTES?	02	
33	R01	HIGH LIMIT	NO LIMIT	
34	R01	LOW LIMIT	NO LIMIT	
35	R01	HIGH DIFF LIMIT	00.10	
36	R01	LOW DIFF LIMIT	NO LIMIT	
37	R	CHANNEL NO.	03	Sensor Channel 3 is River Stage
38	R03	SENSOR TYPE	11	
39	R03	CARD SLOT #	02	
40	R03	o=cw+ , 1=ccw+	00	
41	R03	*VALUE /INCREMENT	00.01	
42	R03	CURRENT VALUE	01.95	
43	R03	MEAS INTERVAL	00:10:00	
44	R03	START OF MEAS	17:31:00	
45	R03	LEVEL I MEAS TYPE	001	
46	R03	XMIT 2 OR 3 BYTES?	03	
47	R03	HIGH LIMIT	03.00	
48	R03	LOW LIMIT	NO LIMIT	
49	R03	HIGH DIFF LIMIT	NO LIMIT	
50	R03	LOW DIFF LIMIT	NO LIMIT	
51	R	CHANNEL NO.	05	Sensor Channel 5 is Battery Voltage
52	R05	SENSOR TYPE	12	Do not program for Random
53	R05	MEAS INTERVAL	01:00:00	Transmission
54	R05	START OF MEAS	17:31:00	
55	R05	LEVEL I MEAS TYPE	001	
56	R05	XMIT 2 OR 3 BYTES?	02	
57	R05	HIGH LIMIT	NO LIMIT	
58	R05	LOW LIMIT	NO LIMIT	
59	R05	HIGH DIFF LIMIT	NO LIMIT	
60	R05	LOW DIFF LIMIT	NO LIMIT	

EXAMPLE C

1	R	HANDAR 540A DCP -	REV 3.8	Program example is shown in the
2	R	ID	15D5CF58	run mode.
3	R	STATION TIME	17:28:55	
4	R	YEAR (XX)	99	
5	R	DCP JULIAN DATE	316	
6	R	GOES PRI XMT MODE	02	
7	R	1ST GOES XMT TIME	19:0l:00	
8	R	PRI XMT INTERVAL	06:00:00	Time slot set by NESDIS
9	R	GOES SEC XMT MODE	21	
10	R	SEC XMT HEADER	00	
11	R	# OF XMISSION	02	
12	R	RANDOM XMT INTVL	00:05::00	
13	R	TEL # AREA CODE	0-000	
14	R	TEL # LOCAL	000-0000	
15	R	MODEM XMT FORMAT	00	
16	R	1ST DIAL TIME	00:00:00	
17	R	DIAL INTERVAL	00:00:00	
18	R	TEL, EMG XMIT 1=ON	00	
19	R	AUTO DUMP? 1=Y 0=N	00	
20	R	1ST LOG TIME	00:00:00	
21	R	LOG INTERVAL	00:00:00	
22	R	DRIVE MODE	00	
23	R	LOG MODE	00	
24	R	CHANNEL NO.	01	Sensor Channel 1 Precipitation
25	R	CHANNEL NO.	01	Sensor Channel 1 is River Stage
26	R03	SENSOR TYPE	11	Incremental Shaft Encoder
27	R03	CARD SLOT #	.02	
28	R03	o=cw+ 1=CCW+	00	
29	R03	*VALUE/INCREMENT	00.01	
30	R03	CURRENT VALUE	01.95	
31	R03	MEAS INTERVAL	01:00:00	
32	R03	START OF MEAS	17:31:00	
33	R03	LEVEL I MEAS TYPE	001	
34	R03	XMIT 2 OR 3 BYTES?	03	
35	R03	HIGH LIMIT	25.00	
36	R03	LOW LIMIT	NO LIMIT	
37	R03	HIGH DIFF LIMIT	NO LIMIT	
38	R03	LOW DIFF LIMIT	NO LIMIT	

Note: The High and Low levels will trigger if the sensor value exceeds these numbers.

The High Diff and Low Diff limits represent the change in the sensor value since the last measurement interval that is required to trigger random reporting.

EXAMPLE D - Random Data

Table 1 shows a routine data transmission containing data that exceed the high differential criterion. The fifth data value on the second line was the observation taken at 19:25Z on day 246. Between 19:002 and 19:252, there was an increase of 0.30 inches of precipitation (from 1.80 to 2.10). Subsequently, the Handar DCP labeled the self-timed observation with an asterisk and transmitted the data randomly. Example E shows the raw pseudobinary message received by NESDIS and relayed to HADS for processing. The routine message was received and processed at 21:19:27Z on Julian day 246 and the emergency random message was received and processed at 19:25:55Z on Julian day 246 (nearly 2 hours earlier).

Table 1

```
15D5CF58 0 0 246 211927
01.80 01.80 01.80 01.80 02.10* 02.10 02.10 02.10 02.10 02.10 02.10
02.51 02.52 O2.53 O2.53 O2.54 02.54 02.55 02.55 02.54 02.54
02.54
13.3 13.6 13.1 ////// 11E
```

EXAMPLE E - Raw Pseudobinary Data

```
15D5CF58 0 0 246 192555 @@CR@F 48+3NN 115E
```

The pseudobinary random message highlighted in Example E is decoded and then encoded into records by the Office of Hydrology. The data are distributed to WSFOs and RFCs via AFOS and the Remote Job Entry system. The AFOS products that contain decoded DCP data are NMCRRAxxx and NMCRRSxxx.

The first part of the message transmitted by the DCP is the NESDIS-assigned address. This is the first eight characters of the message shown as 15D5CF58. The second part of the message is information that NESDIS places on the message when it is received at the ground station. The third part of the message is the data. In this example it is 5 bytes long and contains raw pseudobinary data @CR@F. The fourth part of the message is Data Acquisition and Monitoring Subsystem (DAMS) information that NESDIS also places on the message when it is received at the ground station plus the channel on which the data are received. The DAMS information is "48+3NN," and the channel is “115E”.

Example of a decoded random message.

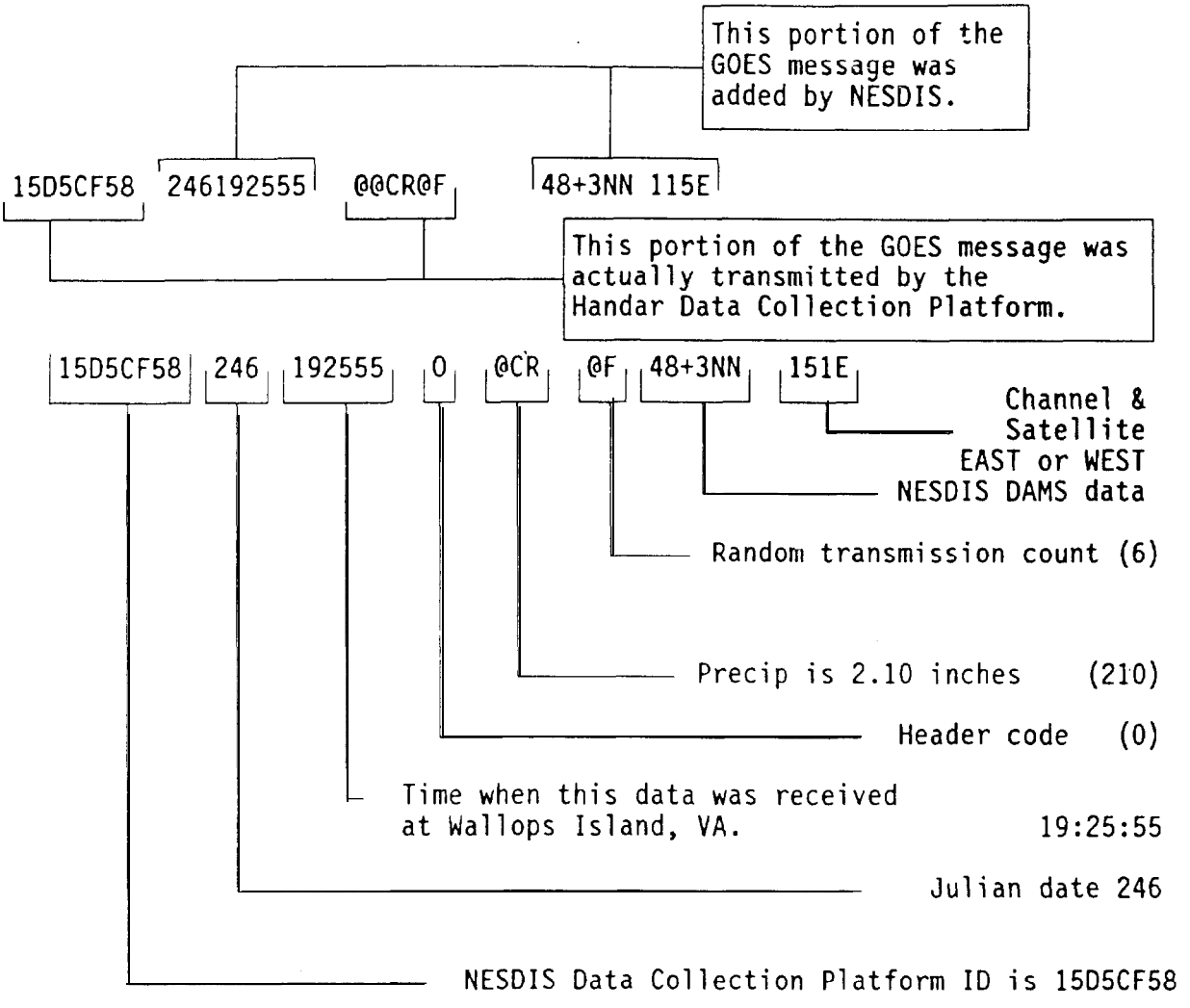

EXAMPLE

PLATFORM PROGRAM VERIFICATION			
1	PLATFORM ID	162B137	REMARKS
2	USER ID	NWS	
3	PRIMARY CHANNEL	64	
4	SECONDARY CHANNEL	118	
5	SATELLITE (E/W)	W	
6	SITE ID	CAMC2	
7	LATITUDE	39-14	
8	LONGITUDE	108-16	
9	TIME SLOT	0100	
10	TYPE OF SEC XMIT MODE	21	
11	EMER TEST (PASS/FAIL)	PASS	
12	TYPE OF DATA SENSED	a. PRECIPITATION b. STAGE c. d. e. f.	
13	CONTACT PERSON NAME/TELEPHONE	U.R. RAINWATER 301-713-9999	

Complete the attached form for each reprogrammed ARC following the above example and return it as shown.

EFFECT ON OTHER INSTRUCTIONS

None.

J. Michael St. Clair
Chief, Engineering Division

Attachment

PLATFORM PROGRAM VERIFICATION			
1	PLATFORM ID		REMARKS
2	USER ID		
3	PRIMARY CHANNEL		
4	SECONDARY CHANNEL		
5	SATELLITE (E/W)		
6	SITE ID		
7	LATITUDE		
8	LONGITUDE		
9	TIME SLOT		
10	TYPE OF SEC XMIT MODE		
11	EMER TEST (PASS/FAIL)		
12	TYPE OF DATA SENSED	a. b. c. d: e. f.	
13	CONTACT PERSON NAME/TELEPHONE		

RETURN THIS FORM TO:

National Weather Service Headquarters
1325 East-West Highway, Room 3402
Silver Spring, Maryland 20910

ERRATA SHEET NO. 1 (for Electronics Technicians)
Engineering Division
W/OSO321:BGM

Errata to AHOS Maintenance Note 26, dated July 8, 1993

GENERAL

This errata sheet provides additional information and programming instructions for the Automatic Remote Collector (ARC).

PROCEDURE

1. Contact Larry Cedrone of the Office of Hydrology, (301) 713-0624, before you reprogram the ARC and provide him with an approximate time and date you plan to reprogram the ARC.

2. Open the ARC system and verify that the secondary channel is set to the channel listed in Table 1 under the heading SECONDARY CHANNEL.

3. If the secondary channel is to be selected, reference drawing 540-6004 in the Handar manual. The switches for setting up the secondary channel (S4, S5, and S6) are located on the 1.7 synthesizer board. Select the appropriate secondary channel, then close the system.

4. Follow the attached examples A or B when programming the ARC for random reporting.

NOTE

Two channels are programmed almost identically for one sensor. This is because two readings are necessary for random reporting.

To verify the program for random transmission reporting, the technician must trigger an event for the weighing rain gauge by either holding the collector down or adding a weight to the collector. The tipping bucket can be triggered by moving the tipper located on the frame assembly. Leave the programming test set hooked up so the triggered transmission may be observed. When the random transmission is complete, a DONE message will be displayed in the test set window.

5. Send a copy of the ARC program to Larry Cedrone at the following address:

   National Weather Service Headquarters
   1325 East-West Highway, Room 8102
   Silver Spring, Maryland 20910

EFFECT ON OTHER INSTRUCTIONS

Attach this errata sheet to Maintenance Note 26, section 2.3, EHB-10. In Maintenance Note 26, replace Example A (page 6) and Example B (page 7) with examples A and B attached to this errata sheet.

J. Michael St. Clair
Chief, Engineering Division

Attachments

AUTOMATIC REMOTE COLLECTOR (ARC)
SATELLITE SYSTEMS
TABLE 1

ADDRESS	LATITUDE	LONGITUDE	SECONDARY CHANNEL	LOCATION
M A I N E				
15034750	46:13:00 N	70:16:00 W	115	St. Aurelie
15D2F624	46:27:11 N	68:57:00 W	115	Smith Brook
15D2D0C8	46:47:00 N	68:50:00 W	115	Fox Brook
45516912	47:14:00 N	67:53:00 W	115	Grant River, Canada
455167C0	47:04:00 N	69:04:00 W	115	New Brunswick, Canada
NEW MEXICO				
15CC1620	32:27:00 N	104:32:00 W	115	Marathon
15CD57D0	35:53:00 N	105:09:00 w	115	~~Albuquerque~~ Awson Dr
15CD713C	35:43:00 N	105:41:00 w	115	Pecos 9N
15CDC2B2	33:04:00 N	108:32:00 W	115	Gila 7NE -
15CFE1AA	32:31:00 N	104:20:00 W	115	Carlsbad Dam 3→
OREGON				
15CD14DA	42:32:18 N	122:33:11 W	126	Butte Falls 1SE
15CD2140	44:52:42 N	117:06:47 W	126	Halfway
15CD3236	45:17:11 N	119:41:44 w	126	Heppner
15CD624A	42:37:45 N	124:03:25 W	126	Illane
15CDA754	45:22:41 N	117:13:42 W	126	Joseph
15CE264E	44:50:49 N	123:39:35 w	126	Valsetz
15CF5224	45:33:45 N	116:50:00 W	126	Imnaha
151066B2	45:56:28 N	123:31:39 w	126	Jewell
15D075C4	43:20:59 N	122:43:38 W	126	Steamboat
T E X A S				
15CC9034	30:28:00 N	101:43:00 w	115	Joe Chandler Ranch
15CCF5D2	30:59:00 N	101:14:00 w	115	Bisset Ranch
15CD81B8	30:21:00 N	101:02:00 w	115	Bagget Ranch
15CE7632	29:52:30 N	100:53:50 w	115	Comstock 22NE
15CF0258	30:04:45 N	101:06:35 W	115	Juno 5S
15CF37C2	29:49:25 N	102:10:00 w	115	Dryden 14S
15CF74C8	30:08:00 N	101:34:00 w	115	Pandale Crossing
15CFO430	30:34:00 N	101:28:00 W	115	Bud Cox Ranch
ALASKA				
15CF67BE	61:09:00 N	149:43:00 w	126	Anchorage 7SE
15D280B4	65:53:00 N	149:43:00 w	126	Stevens Village 26WSW
15D4A696	64:54:00 N	146:25:00 W	126	Fairbanks 39ENE
1504BSE0	64:53:00 N	146:24:00 W	126	Fairbanks 93S ~~[illegible]~~ 93S
15D45E0	64:28:00 N	146:55:00 W	126	Salchaket
15D4D006	64:24:00 N	146:57:00 W	126	Harding Lake
1504E59C	64:34:00 N	149:06:00 W	126	Nenana

D

TABLE 1 (continued)

A R I Z O N A						
15CD92CE	33:38:00	N	109:05:00	W	115	Cibeque
COLORADO						
15CC30CC	40:40:00	N	105:13:00	W	115	Ft. Collins 9NW
15CC552A	39:06:00	N	105:05:00	W	115	Woodland Park
15CC8342	40:12:00	N	105:32:00	W	115	Allens Park
15CCCO48	37:56:00	N	104:56:00	W	115	Rollinsville
15CDD1C4	40:42:00	N	105:48:00	W	115	Rustic 12WSW
15CEF026	39:42:00	N	105:13:00	W	115	Golden 3S
15CFF2DC	39:38:00	N	105:19:00	W	115	Evergreen
15D0405E	39:34:00	N	105:13:00	W	115	Intercanyon
I D A H O						
15CC73C6	46:29:43	N	115:47:41	W	126	Pierce
15CCE6A4	42:46:16	N	115:43:10	W	126	Hot Springs
15CD07AC	43:57:37	N	115:50:40	W	126	Centerville
15CF973A	47:42:24	N	115:28:18	W	126	Prichard
15000354	42:38:00	N	112:05:00	W	126	Topaz
WASHINGTON						
15CE43A8	48:35:40	N	120:24:10	W	126	Mazama
15CE50DE	48:59:00	N	119:33:00	W	126	Nighthawk 2S
15CE6544	17:32:28	N	121:50:02	W	126	Snowqualimie Falls
15CEE350	48:39:06	N	121:41:30	W	126	Upper Balker Dam
W Y O M I N G						
13301064	41:33:17	N	115:40:58	W	126	Laramie, Nr Bosler 2S
133025FE	41:03:17	N	105:58:49	W	126	L.Laramie Woods Landing 3NE
13303688	41:27:20	N	106:48:15	W	126	North Platte R. Nr Saratoga
13304018	41:01:42	N	107:32:55	W	126	Crow Creek Nr Cheyenne 7W
1330536E	42:11:34	N	110:09:45	W	126	Middle Popo Agie R.Nr Lander 6SW
133066F4	44:50:58	N	107:18:14	W	126	Tongue R. Nr Dayton 2SW

with the appropriate River Forecast Center. They will provide the electronics technicians with the appropriate number(s) to use to program ARCs for HIGH DIFF LIMIT. In general, these numbers will be higher for rivers that rise and fall rapidly than the numbers for large rivers. For example, the Mississippi River at New Orleans would seldom be expected to rise from runoff at a rate of 1 foot per hour, while some small rivers could easily rise at a rate of 2 to 4 feet per hour. RFC hydrologists will provide technical assistance to the service hydrologists in this area.

PROCEDURE

Program each ARC system for self-timed and random reporting at the next regular visit. Use the Example A and B programs included in this maintenance note. At some sites the program will need to deviate to reflect the proper precipitation sensor type (for example, a tipping bucket gauge vs. an F&P weighing gauge). However, this deviation will not cause a change in the format of the data. Upon completion of the ARC system programming, verify that the program is working. To verify, trigger an event by moving the tipper on the tipping bucket or adding enough liquid to the F&P gauge so the programmed High Diff Limits are exceeded and a random transmission is generated. It may take up to 30 minutes before transmission occurs. Then call Larry Cedrone of the Office of Hydrology (301 713-0624) to verify that the program is operational.

Self-timed Transmissions

The program shown in Example A and B contains information on random data transmission as well as self-timed data transmissions. Line 09 of the program describes that the secondary transmission mode (for random data transmissions) has been selected as 21. Handar defines this as the "emergency random" feature. Furthermore, when the ARC transmits in this mode, it will transmit a header of "00" (Handar defines the entry of "21" in line 09 to mean that a header of "00" will be transmitted) and it will transmit twice (line 10) within a maximum of 5 minutes (line 11) after the observation has been taken that exceeds the criteria programmed into the ARC. This 5-minute time (300 seconds) is the maximum value of the random number that will be generated, which must be counted down before transmission. This example is for an ARC that has both a precipitation sensor and a river gauge sensor. The precipitation sensor is a tipping bucket.

EXAMPLE A

1	R	HANDAR 540A DCP -	REV 3.8	Program example is shown in the
2	R	I D	15D5CF58	run mode.
3	R	STATION TIME	18:28:55	
4	R	YEAR (XX)	99	
5	R	DCP JULIAN DATE	316	
6	R	GOES PRI XMT MODE	02	
7	R	1ST GOES XMT TIME	19:01:00	Time slot assigned by NESDIS
8	R	PRI XMT INTERVAL	06:00:00	Time interval assigned by NESDIS
9	R	GOES SEC XMT MODE	21	
10	R	SEC XMT HEADER	00	
11	R	# OF XMISSION	02	
12	R	RANDOM XMT INTVL	00:05:00	
13	R	TEL # AREA CODE	0-000	
14	R	TEL # LOCAL	000-0000	
15	R	MODEM XMT FORMAT	00	
16	R	1ST DIAL TIME	00:00:00	
17	R	DIAL INTERVAL	00:00:00	
18	R	TEL, EMG XMIT 1=ON	00	
19	R	AUTO DUMP? 1=Y 0=N	00	
20	R	1ST LOG TIME	00:00:00	
21	R	LOG INTERVAL	00:00:00	
22	R	DRIVE MODE	00	
23	R	LOG MODE	00	
24	R	CHANNEL NO.	01	Sensor Channel 1 Precipitation
25	R01	SENSOR TYPE	07	Tipping Bucket
26	R01	CARD SLOT #	02	
27	R01	*VALUE PER TIP	00.01	
28	R01	CURRENT VALUE	10.26	
29	R01	MEAS INTERVAL	00:30:00	
30	R01	START OF MEAS	19:00:00	
31	R01	LEVEL 1 MEAS TYPE	001	
32	R01	XMIT 2 OR 3 BYTES?	03	
33	R01	HIGH LIMIT	NO LIMIT	
34	R01	LOW LIMIT	NO LIMIT	
35	R01	HIGH DIFF LIMIT	00.05	
36	R01	LOW DIFF LIMIT	NO LIMIT	
37	R	CHANNEL NO.	02	Sensor Channel 2 Precipitation
38	R02	SENSOR TYPE	07	Tipping Bucket
39	R02	CARD SLOT #	02	
40	R02	*VALUE PER TIP	00.01	
41	R02	CURRENT VALUE	10.26	
42	R02	MEAS INTERVAL	00:30:00	
43	R02	START OF MEAS	19:15:00	This time must be one-quarter hour
44	R02	LEVEL I MEAS TYPE	000	later than the time on line 30
45	R02	XMIT 2 OR 3 BYTES?	03	
46	R02	HIGH LIMIT	NO LIMIT	
47	R02	LOW LIMIT	NO LIMIT	
48	R02	HIGH DIFF LIMIT	00.05	
49	R02	LOW DIFF LIMIT	NO LIMIT	
50	R	CHANNEL NO.	03	Sensor Channel 3 is River Stage

51	R03	SENSOR TYPE	11	
52	RO3	CARD SLOT #	02	
53	R03	0=CW+ , 1=CCW+	00	
54	R03	*VALUE /INCREMENT	00.01	
55	R03	CURRENT VALUE	01.95	
56	R03	MEAS INTERVAL	00:30:00	
57	R03	START OF MEAS	19:00:00	
58	R03	LEVEL I MEAS TYPE	001	
59	R03	XMIT 2 OR 3 BYTES?	03	
60	R03	HIGH LIMIT	NO LIMIT	
61	R03	LOW LIMIT	NO LIMIT	
62	R03	HIGH DIFF LIMIT	00.25	
63	R03	LOW DIFF LIMIT	NO LIMIT	
64	R	CHANNEL NO.	04	Sensor Channel 4 is River Stage
65	R04	SENSOR TYPE	11	
66	R04	CARD SLOT #	02	
67	R04	0=CW+ , 1=CCW+	00	
68	R04	*VALUE/INCREMENT	00.01	
69	R04	CURRENT VALUE	01.95	
70	R04	MEAS INTERVAL	00:30:00	
71	R04	START OF MEAS	19:15:00	This time must be one-quarter hour
72	R04	LEVEL I MEAS TYPE	001	later than the time on line 57
73	R04	XMIT 2 OR 3 BYTES?	03	
74	R04	HIGH LIMIT	NO LIMIT	
75	R04	LOW LIMIT	NO LIMIT	
76	R04	HIGH DIFF LIMIT	00.25	
77	R04	LOW DIFF LIMIT	NO LIMIT	
78	R 4	CHANNEL NO.	05	Sensor Channel 5 is Battery Voltage
79	R05	SENSOR TYPE	12	
80	R05	MEAS INTERVAL	03:00:00	
81	R05	START OF MEAS	17:31:00	
82	R05	LEVEL I MEAS TYPE	001	
83	R05	XMIT 2 OR 3 BYTES?	02	
84	R05	HIGH LIMIT	NO LIMIT	
85	R05	LOW LIMIT	NO LIMIT	
86	R05	HIGH DIFF LIMIT	NO LIMIT	
87	R05	LOW DIFF LIMIT	NO LIMIT	

EXAMPLE B

1	R	HANDAR 540A DCP -	REV 3.8	Program example is shown in the
2	R	ID	15D5CF58	run mode for a weighing rain
3	R	STATION TIME	17:28:55	gauge.
4	R	YEAR (XX)	99	
5	R	DCP JULIAN DATE	316	
6	R	GOES PRI XMT MODE	02	
7	R	1ST GOES XMT TIME	19:01:00	
8	R	PRI XMT INTERVAL	06:00:00	Time slot set by NESDIS
9	R	GOES SEC XMT MODE	21	
10	R	SEC XMT HEADER	00	
11	R	# OF XMISSION	02	
12	R	RANDOM XMT INTVL	00:01:00	
13	R	TEL # AREA CODE	0-000	
14	R	TEL # LOCAL	000-0000	
15	R	MODEM XMT FORMAT	00	
16	R	1ST DIAL TIME	00:00:00	
17	R	DIAL INTERVAL	00:00:00	
18	R	TEL, EMG XMIT 1=ON	00	
19	R	AUTO DUMP? 1=Y 0=N	00	
20	R	1ST LOG TIME	00:00:00	
21	R	LOG INTERVAL	00:00:00	
22	R	DRIVE MODE	00	
23	R	LOG MODE	00	
24	R	CHANNEL NO.	01	Sensor Channel 1 Precipitation
25	R01	SENSOR TYPE	06	F&P weighing rain gauge
26	R01	CARD SLOT #	02	
27	R01	*VALUE PER TIP	00.10	
28	R01	CURRENT VALUE	10.26	
29	R01	MEAS INTERVAL	00:30:00	
30	R01	START OF MEAS	19:00:00	
31	R01	LEVEL I MEAS TYPE	001	
32	R01	XMIT 2 OR 3 BYTES?	03	
33	R01	HIGH LIMIT	NO LIMIT	
34	R01	LOW LIMIT	NO LIMIT	
35	R01	HIGH DIFF LIMIT	00.10	
36	R01	LOW DIFF LIMIT	NO LIMIT	
37	R	CHANNEL NO.	02	Sensor Channel 2 Precipitation
38	R02	SENSOR TYPE	06	F&P weighing rain gauge
39	R02	CARD SLOT #		
40	R02	*VALUE PER TIP	00.10	
41	R02	CURRENT VALUE	10.26	
42	R02	MEAS INTERVAL	00:30:00	
43	R02	START OF MEAS	19:15:00	This time must be one-quarter hour
44	R02	LEVEL I MEAS TYPE	000	later than the time on line 30
45	R02	XMIT 2 OR 3 BYTES?	03	
46	R02	HIGH LIMIT	NO LIMIT	
47	R02	LOW LIMIT	NO LIMIT	
48	R02	HIGH DIFF LIMIT	00.10	
49	R02	LOW DIFF LIMIT	NO LIMIT	
50	R	CHANNEL NO.	03	Sensor Channel 3 is River Stage

```
51   R03 SENSOR TYPE                    11
52   R03 CARD SLOT #                   0 2
53   R03 0=CW+ ,     1=CCW+            0 0
54   R03 *VALUE /INCREMENT           00.01
55   R03 CURRENT VALUE               01.95
56   R03 MEAS INTERVAL            00:30:00
57   R03 START OF MEAS            19:00:00
58   R03 LEVEL I MEAS TYPE             001
59   R03 XMIT 2 OR 3 BYTES?             03
60   R03 HIGH LIMIT               NO LIMIT
61   R03 LOW LIMIT                NO LIMIT
62   R03 HIGH DIFF LIMIT             00.25
63   R03 LOW DIFF LIMIT           NO LIMIT
64   R   CHANNEL NO.                    04 Sensor Channel 4 is River Stage
65   R03 SENSOR TYPE                    11
66   R03 CARD SLOT #                    02
67   R03 0=CW+       1 =CCW+            00
68   R03 *VALUE/INCREMENT            00.01
69   R03 CURRENT VALUE               01.95
70   R03 MEAS INTERVAL            00:30:00
71   R03 START OF MEAS            19:15:00 This time must be one-quarter hour
72   R03 LEVEL I MEAS TYPE             000  later than the time on line 57
73   R03 XMIT 2 OR 3 BYTES?             03
74   R03 HIGH LIMIT               NO LIMIT
75   R03 LOW LIMIT                NO LIMIT
76   R03 HIGH DIFF LIMIT             00.25
77   R03 LOW DIFF LIMIT           NO LIMIT
78   R    CHANNEL NO                    05 Sensor Channel 5 is Battery Voltage
79   R05 SENSOR TYPE                    12
80   R05 MEAS INTERVAL            03:00:00
81   R05 START OF MEAS            17:31:00
82   R05 LEVEL I MEAS TYPE             001
83   R05 XMIT 2 OR 3 BYTES?             02
84   R05 HIGH LIMIT               NO LIMIT
85   R05 LOW LIMIT                NO LIMIT
86   R05 HIGH DIFF LIMIT          NO LIMIT
87   R05 LOW DIFF LIMIT           NO LIMIT
```

EXAMPLE C

1	R	HANDAR 540A DCP -	REV 3.8	Program example is shown in the
2	R	ID	15D5CF58	run mode.
3	R	STATION TIME	17:28:55	
4	R	Y E A R (X X)	99	
5	R	DCP JULIAN DATE	316	
6	R	GOES PRI XMT MODE	02	
7	R	1ST GOES XMT TIME	19:01:00	
8	R	PRI XMT INTERVAL	06:00:00	Time slot set by NESDIS
9	R	GOES SEC XMT MODE	21	
10	R	SEC XMT HEADER	00	
11	R	# OF XMISSION	02	
12	R	RANDOM XMT INTVL	00:05::00	
13	R	TEL # AREA CODE	0-000	
14	R	TEL # LOCAL	000-0000	
15	R	MODEM XMT FORMAT	00	
16	R	1ST DIAL TIME	00:00:00	
17	R	DIAL INTERVAL	00:00:00	
18	R	TEL EMG XMIT 1=ON	00	
19	R	AUTO DUMP? 1=Y 0=N	00	
20	R	1ST LOG TIME	00:00:00	
21	R	LOG INTERVAL	00:00:00	
22	R	DRIVE MODE	00	
23	R	LOG MODE	00	
24	R	CHANNEL NO.	01	Sensor Channel 1 Precipitation
25	R	CHANNEL NO.	01	Sensor Channel 1 is River Stage
26	R03	SENSOR TYPE	11	Incremental Shaft Encoder
27	R03	CARD SLOT #	02	
28	R03	0=CW+ , 1= CCW+	00	
29	R03	*VALUE/INCREMENT	00.01	
30	R03	CURRENT VALUE	01.95	
31	R03	MEAS INTERVAL	01:00:00	
32	R03	START OF MEAS	17:31:00	
33	R03	LEVEL I MEAS TYPE	001	
34	R03	XMIT 2 OR 3 BYTES?	03	
35	R03	HIGH LIMIT	25.00	
36	R03	LOW LIMIT	NO LIMIT	
37	R03	HIGH DIFF LIMIT	NO LIMIT	
38	R03	LOW DIFF LIMIT	NO LIMIT	

Note: The High and Low levels will trigger if the sensor value exceeds these numbers.

The High Diff and Low Diff limits represent the change in the sensor value since the last measurement interval that is required to trigger random reporting.

MAINTENANCE NOTE 27 (for Electronics Technicians)
Engineering Division
W/OSO321 :BGM/DAD

LARC Interface Device (LID) Technical Information Package (TIP).

NOTICE! Please read carefully. Implementing this Note requires the users to understand: the replacement equipment does not operate as the original did, there are data interpretation differences, and United States Geological Survey (USGS) and NWS installation coordination is required.

GENERAL. The purpose of this TIP is to provide instructions for installing and operating the LID. The USGS is replacing all of their mercury manometer water level gauges with new water level pressure sensors. This TIP provides information needed by the NWS technician(s) to use the LID to interface the Limited Automatic Remote Collector (LARC) equipment to the new stream gauging equipment being installed by the USGS. This TIP also provides the information needed by the NWS service hydrologist to understand the programmatic considerations for setup/installation coordination with the USGS and the technical issues associated with the use of the new equipment. The LID (and junction box) are NWS property, but they will be delivered to the site, installed, and checked-out by the USGS. Instructions and troubleshooting information are given in this TIP for the interfacing, setup, operation and interpretation of the data for the LID/LARC combination.

The USGS has not designated the use of a particular data logger/sensor for all sites, but is allowing each USGS District Office to choose the equipment to be installed at each site. This TIP is written to cover the most likely combinations that may be installed, but it is beyond the scope of this TIP to provide detailed instructions for each data logger/sensor combination that is owned by the USGS. Therefore, should a situation occur where technical help is needed, please call the NWS Engineering Design Branch, hydrology program engineer, at 301-713-1845 ext.115.

The LID allows the NWS LARC to monitor data values that are transmitted over the Serial Digital Interface-1200 baud (SDI-12) bus used by the new sensors and data loggers. The LID connects between an SDI-12 system and a non-SDI-12 device (e.g., LARC). A LID obtains selective input data from the SDI-12 bus, converts it to quadrature pulse encoded format data, and outputs the converted data to a LARC. The output from the LID mimics that of an incremental shaft encoder.

This TIP is issued to all holders of Engineering Handbook No.10 (EHB-10).

EFFECT ON OTHER INSTRUCTIONS. None

PROCEDURE. Contained within the Technical Information Package.

John McNulty
Chief, Engineering Division

1.0 INSTALLATION OVERVIEW 1
1.1 Site Coordination. 3
1.2 Telephone Requirement. 3
1.3 Earthing Requirements. 3
1.4 Physical Location Within the Well-house 3

2.0 INSTALLATION OUTLINE 4
2.1 Equipment Required 4
2.2 Safety Precautions 4
2.3 Installation Steps 5

3.0 INSTALLATION INSTRUCTIONS 6
3.1 Description of Each Step (a - t) 6
3.1.1 Junction Box Installation (Step a), ... 6
3.1.2 LID Input Connection (Step b) 6
3.1.3 Remove LID Cover (Step c). 7
3.1.4 LID Output Connection (Step d). 7
3.1.5 Cable Adapter, 1CA (Step e). 7
3.1.6 Connect LID to LARC (Step f). 7
3.1.7 Setting the LID's DIP Switches (Step g). 7
3.1.7.1 Direction of Rotation. 8
3.1.7.2 Sensor Address. 9
3.1.7.3 Parameter Number. 10
3.1.8 Power (Step h). 10
3.1.9 LARC to Computer Connection (Step i). 11
3.1.10 Check the LARC Program (Step j). 11
3.1.11 Clock (Step k). 11
3.1.12 Verify SDI-12 (Step I). 11
3.1.13 Zero Check (Step m). 11
3.1.14 LID ON (Step n). 11
3.1.15 Wait for Data (Step o). 11
3.1.16 Correct Reading (Step p)? 11
3.1.17 Cause Change.(Step q). 11
3.1.18 Check Reading (Step r). 11
3.1.19 Reset (Steps). 11
3.1.20 Reporting (Step t). 11
3.2 Resetting the LID/LARC 12

4.0 MAINTENANCE AND LOGISTICS POLICIES 12
4.1 Delivery. 12
4.2 Spares 13
4.3 Incremental Shaft Encoder Disposition 13
4.4 Maintenance 13
4.5 Maintenance Responsibilities 13
4.6 On-site Repairs 13
4.7 EMRS Reporting 14
4.8 Staffing Policies 14

5.0 WARRANTY 14
5.1 Limited Warranty 14
5.2 Warranty Tracking 14

6.0 DOCUMENTATION 14
6.1 Technical Information Package 14
6.2 Maintenance Schedule 14
6.3 NWS EHB-1 14

7.0 TRAINING 14
7.1 On-the-Job 14
7.2 LARCTraining 14

8.0 TECHNICAL AND PROGRAMMATIC DETAILS 15
8.1 Purpose. 15
8.2 General 16
8.3 System Concepts 16
8.4 Sampling 16
8.5 LID 16
8.6 System Constraints 17
8.7 LID - Required Usage 17

9.0 LARC SITES REQUIRING A LID 20

10.0 APPENDIX A, Troubleshooting 26

11 .0 APPENDIX B, Handar Programming Set Table for Model 550A 27

12.0 APPENDIX C, NWS LARC Programming Example 28

13.0 APPENDIX D 29
13.1 USGS Technical Representatives 29
13.2 USGS State Representatives 29

1.0 INSTALLATION OVERVIEW. The LID allows the NWS LARC to monitor data values that are being collected over the SDI-12 interface used by the new sensors and data loggers. The LID connects between the bus of an SDI-12 sensing/recording system and a quadrature pulse encoded format (QPF) recording system (e.g., LARC). See Figure 1 (New). A LID obtains the input data from the SDI-12 bus, converts it to QPF and outputs the converted data to a LARC. The output from the LID mimics that of an incremental shaft encoder.

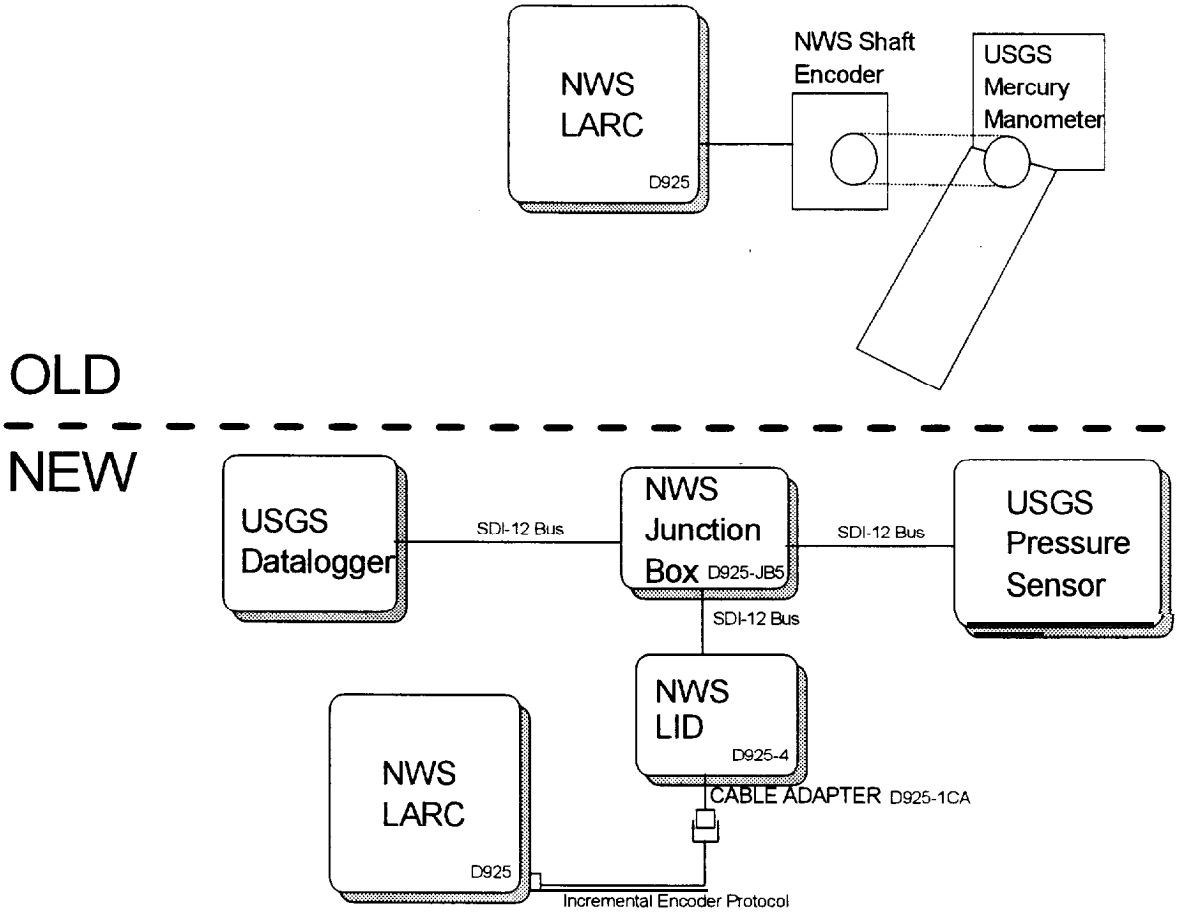

Figure 1

The LID, as shown in Figure 2, consists of an interface board and a plastic enclosure with two cables that are pre-wired to internal terminal blocks. Each cable is approximately 5 feet long and has stripped and tinned wire terminations. No connectors are furnished on the cables. The 3-conductor cable connects to the SDI-12 bus. The 7-conductor cable connects the LID incremental output signals to the LARC.

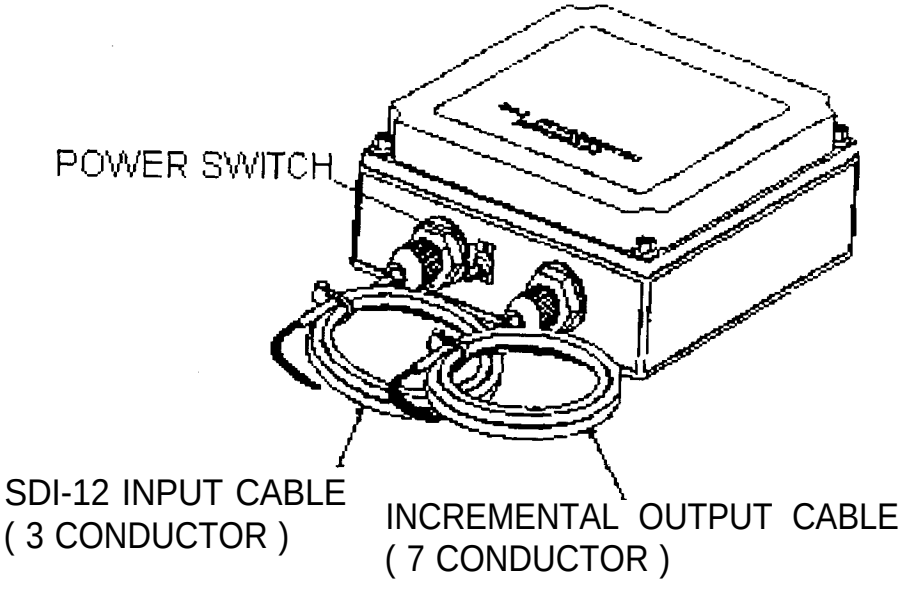

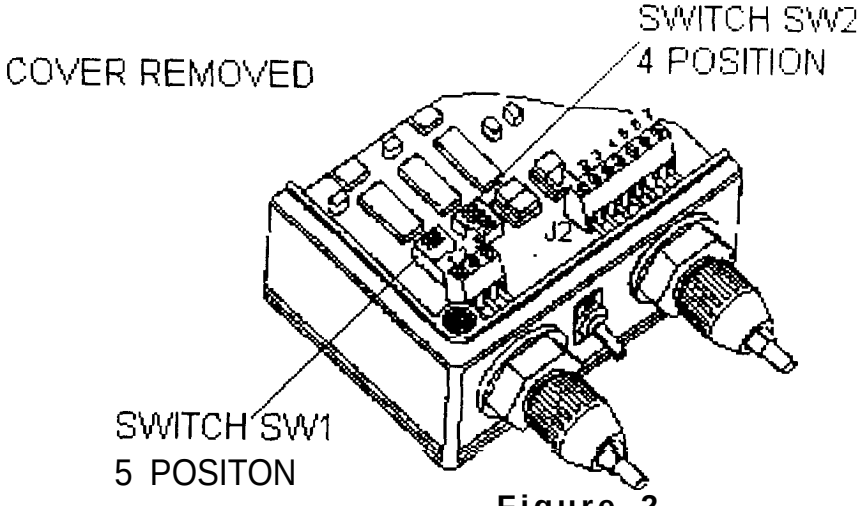

Figure 2

The 3-conductor (SDI-12) cable wires are to be connected inside an NWS junction box (JB5). The 7-conductor cable that is supplied with the LID is to be removed and replaced by the cable

adapter (1CA), which will then connect to the existing LARC cable. Figure 3 shows the cable adapter (1CA), the wiring connections, and the functions of the terminal block connectors and their physical location on the printed circuit board. The LID receives its power from the SDI-12

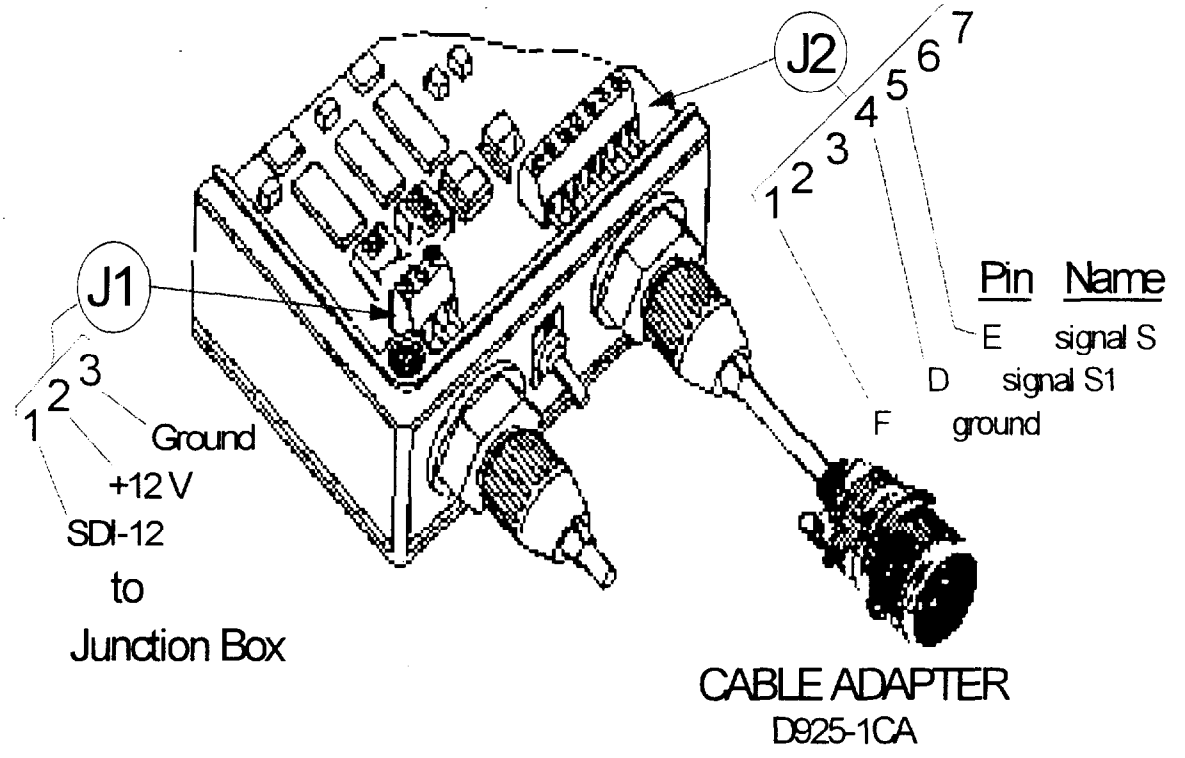

Figure 3

bus (from USGS). A switch (ON/OFF) mounted between the cables, controls power for the LID. A circuit board, mounted inside the enclosure, contains the electronic parts, including a pair of dual-in-line package (DIP) switches that the user must set. The DIP switches are accessed by loosening the four cover screws and removing the cover. A set of user reference cards is located in a plastic pouch on the underside of the cover and describes generic settings of the DIP switches.

1.1 Site Coordination. When the USGS contacts NWS to inform us that a mercury manometer site is about to be upgraded, the following information must be exchanged: The site location and attributes, negotiation of a compatible schedule, and a determination of the equipment being installed. To obtain the LID, junction box and cable adapter, follow the instructions in Section 4.1 Delivery.

1.2 Telephone Requirement. There are no additional telephone requirements.

1.3 Earthing Requirements. The sensor/LID-to-LARC connection has no special grounding requirements beyond general connection practices and site requirements. The sensor/LID is connected to the ground of the USGS system through the SDI-12 bus and incorporates a surge arrestor on the data line. The output of the LID is **NOT ISOLATED** and connects the grounds of the USGS system and the NWS system together. The technicians should verify that each system is appropriately grounded following their respective operational guidelines (NWS EHB-3).

1.4 Physical Location Within the Well-house. The installation of the LID requires a stage location that utilizes the SDI-12 bus (3 wire), for communication between a data logger and the

sensors. The LID is supplied with a hardwired input cable and output cable each measuring 5 feet in length. Notice that some length will be lost to making connections. Locate the LID so that the cables will reach from the SDI-12 bus connection point to the NWS LARC.

2.0 INSTALLATION OUTLINE

2.1 Equipment Required. The following equipment and supplies are required to install and check out a LID.

a. A LID (D925-4). The USGS technician will bring it to the site for initial installation. It wiII be available from the National Logistics Supply Center (NLSC) for replacement actions by NWS maintenance staff.

b. A junction box (D925-JB5). The USGS technician will bring this to the site for initial installation. It will be available from NLSC for replacement actions by NWS maintenance staff

c. A cable adapter (D925-1CA). The NWS technician will **need** to bring this to the site for the initial installation. When replacing a LID, the cable adapter should be removed and reinstalled on the replacement LID.

d. Appropriate communication cable(s) and (or) computer interface devices to connect a terminal/computer to the LARC.

e. Appropriate phillips and slotted-head screwdrivers.

f. Appropriate operating manual for the LARC, and this TIP.

Although not required for the LID installation, a Handar 436A shaft encoder will be very useful as a signal source for setup and confirmation of LARC operation.

2.2 Safety Precautions. Remote hydrologic sites typically employ batteries as the power source. Batteries can be dangerous; handle them with care. Improper use and handling can result in injury or death or in damage to equipment.

The following safety procedures should be observed when installing and maintaining a LID.

a. Always disconnect the instrument from the power source before attempting any repairs. **Remember: The LID is powered from the USGS power source!**

b. Use caution when handling cables, connectors, or terminals; they may yield hazardous currents if inadvertently brought into contact with conductive materials, including water and the human body.

c. Never short-circuit batteries. High current may cause internal battery heating, rapid buildup of gasses, and (or) explosion.

d. Always wash hands after handling batteries, particularly wet or gel cell types.

2.3 Installation Steps. Installing the LID and JB5 involves the following steps. Section 3 contains a full description for each of these steps.

a. Install the JB5.

b. Connect the LID's 3-conductor input cable to the SDI-12 bus connections in the JB5.

c. Remove LID cover.

d. Remove existing 7-wire output cable

e. Install 1CA.

f. Connect the LID output cable (1CA) to the existing LARC cable.

g. Set the LID's internal switches for:
1. address of sensor to be monitored,
2. direction of rotation for incremental output, and
3. parameter number to be monitored.

h. Ensure that power is applied to the SDI-12 system and to the LARC. Set the LID switch to OFF.

I. Connect a TI terminal or laptop computer to the LARC

j. Check the LARC program.

k. Set the LARC clock.

I. Verify USGS SDI-12 system operation and set pressure sensor to stage (a USGS task).

m. Check for "zero" reading on LARC.

n. Set LID power to ON.

o. Wait for data.

p. Check LARC input for correct stage reading.

q, Force a change in stage.

r. Check LARC for change.

s. Reset LID and LARC, monitor LARC for two readings to ascertain correct operation and readings. If the operation and readings are correct, replace the LID cover, secure all wiring and equipment. If not, see the troubleshooting section.

t. Reporting.

3.0 INSTALLATION INSTRUCTIONS. To ensure that the data records in each system (USGS and NWS) use consistent units and datums, verify that scaling and offset corrections are programmed into the pressure sensor, **NOT** in the USGS data logger. The stage reading from the USGS data logger should be the same as the reading from the LARC.

3.1 Description of Each Step (a - t). The paragraphs below correspond to the steps outlined in Section 2.3. Verify that the LARC is working properly with the shaft encoder prior to proceeding with these steps.

3.1.1 Junction Box Installation (Step a). A JB5 will be required for installation of a LID onto the SDI-12 bus for all NWS LID sites. At initial upgrade installations, the USGS technician will provide and install the JB5 and the LID. Connections should follow Figure 4 so that the wires from the LID do not share a terminal with another wire. Some data loggers (Campbell Scientific CR10, Sutron 8200 DCP, and others) have a terminal strip for hookup, and the LID could be directly connected to it. Do NOT connect the LID directly to the USGS data logger or pressure sensor. Install a JB5 for ALL sites, to maintain uniformity across NWS sites. It is important to establish a discrete connection point for the LID, should future replacement be required.

3.1.2 LID Input Connection (Step b). At the initial installation, the USGS technician will install and connect the JB5 and the input side of the LID. Even though the LID and JB5 are NWS

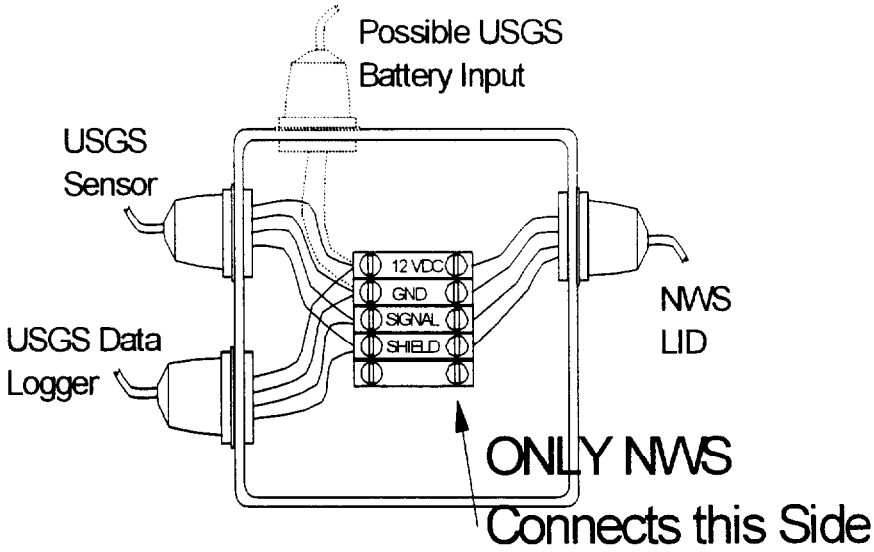

Figure 4 NWS Junction Box (JB5)

equipment, Memorandum Of Understanding (MOU) agreements require that USGS shall make these connections for the following reasons: (1) proper connection and operation of the SDI-12 bus is the responsibility of the USGS (NWS is a passive listener on the bus with no control capabilities), and (2) all SDI-12 instruments are powered from the USGS source. In most installations the JB5 will be installed BETWEEN the USGS data logger and their sensor, making the JB5 a non-removable part of the bus. There are no active components in the JB5, so it should never need replacing. Locating it there provides NWS a set of reserved terminals where the LID (and nothing else) connects, providing a mechanism for replacing the LID, should that be necessary. With the JB5 installed, connect the 3-conductor input cable from the LID, to the SDI-12 bus connections in the JB5, in accordance with the wiring diagram as shown in Figures 3 and 4.

The SDI-12 bus is composed of 3 wires: 12 VDC, GND, and DATA. The 12 VDC line is a 12-volt power line from which sensors and data loggers/DCPs get their power from the bus. This also supplies power to the LID. The GND line is the system ground and is the negative side of the 12-volt power and the return side for the DATA line. The DATA line is the wire over which all SDI-12 communications occur. Note that the 3-conductor cable includes a shield wire. This fourth conductor connects to the system ground of the USGS system and provides a reduction in electrical interference. The shield connection is not intended to be a current carrying conductor and should only be connected at the designated places.

CAUTION! Remove power from the SDI-12 system prior to connecting the 3-conductor cable to the SDI-12 bus, because un-fused 12 VDC is available on the bus and a momentary glitch (by trying to connect to a live bus) can disrupt the USGS system operation.

3.1.3 Remove LID Cover (Step c). The cover is removed by loosening the four captive corner screws and lifting off the cover.

3.1.4 LID Output Connection (Step d). The LID was designed to accommodate several different data-collection systems that accept incremental encoder-type data. Hence, the LID's output contains connections that will not be used by the LARC. The LID's output contains seven signal connections, plus a shield. Remove the existing wiring by loosening the screw terminals and the bulkhead cable clamp (external shell only). Slip the cable out of the box.

3.1.5 Cable Adapter, 1CA (Step e). Attach the 1CA following the Figure 3 connection diagram Slip the wire ends of the adapter through the cable clamp until the cable jacket is just visible inside the box. Tighten the clamp shell (hand tight). Following the connection table in Figure 3, insert the wires into the appropriate terminals and tighten. Not all of the seven terminals in the incremental output terminal block are actually used/connected. Any unused wires of the cable adapter should be electrically insulated from one another and from their surroundings. An easy method of insulating these unused wires is to cover the stripped end of each wire with shrink tubing or a piece of electrical tape. After insulating each unused wire, all of them can be *laid back* along any convenient wire and taped down.

An instruction card labeled "CABLES" is located in a plastic holder on the underside of the LID's cover and contains generic wiring information.

3.1.6 Connect LID to LARC (Step f). Route and dress the existing LARC encoder cable over to the LID and connect it to the cable adapter just installed.

3.1.7 Setting the LID's DIP Switches (Step g). The LID contains a pair of DIP switches, labeled SW 1 and 2, located on the printed circuit board inside the enclosure. Refer to Figure 2. The switches are accessed by removing the cover. These switches are used for selecting the address of the sensor to be monitored, the direction of rotation for the LID's incremental encoder-type output, and the sensor's parameter number to be monitored. The following sections explain the available switch settings.

First remove power from the LID (power switch to OFF), then select the new switch settings with power off. Some registers in the LID only read the switch settings at power ON.

3.1.7.1 Direction of Rotation. The fifth position on SW 1 is used to select the direction of rotation of the LID's incremental encoder-type output. Refer to Figure 5. Most incremental shaft encoders output a series of pulses that represent increasing values when the shaft rotates in the clockwise (CW) direction. This is the default setting in the LID, at position 5 of SW 1 OPEN.

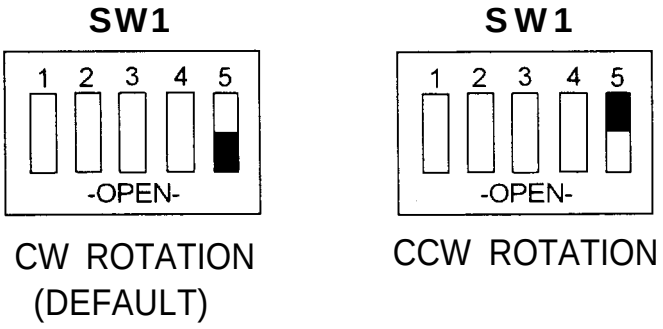

Figure 5 Rotation Switch Settings

If the LARC requires that increasing values be represented by counterclockwise (CCW) pulses, then position 5 on SW 1 should be CLOSED. Determine the proper direction of rotation for the LID output and set position 5 of SW 1 as necessary. A positive increase in the stage should result in a positive increase in the reading taken by the LARC.

3.1.7.2 Sensor Address. SDI-12 recording devices often have multiple sensors connected on their SDI-12 bus. When this is the case, the recording device must be capable of selecting an individual sensor on the bus. To facilitate this sensor selection, each SDI-12 sensor must have a unique assignable address. The recording device will precede all requests for data with the address of the desired sensor. A sensor's address is a single-digit number ranging from 0 to 9,

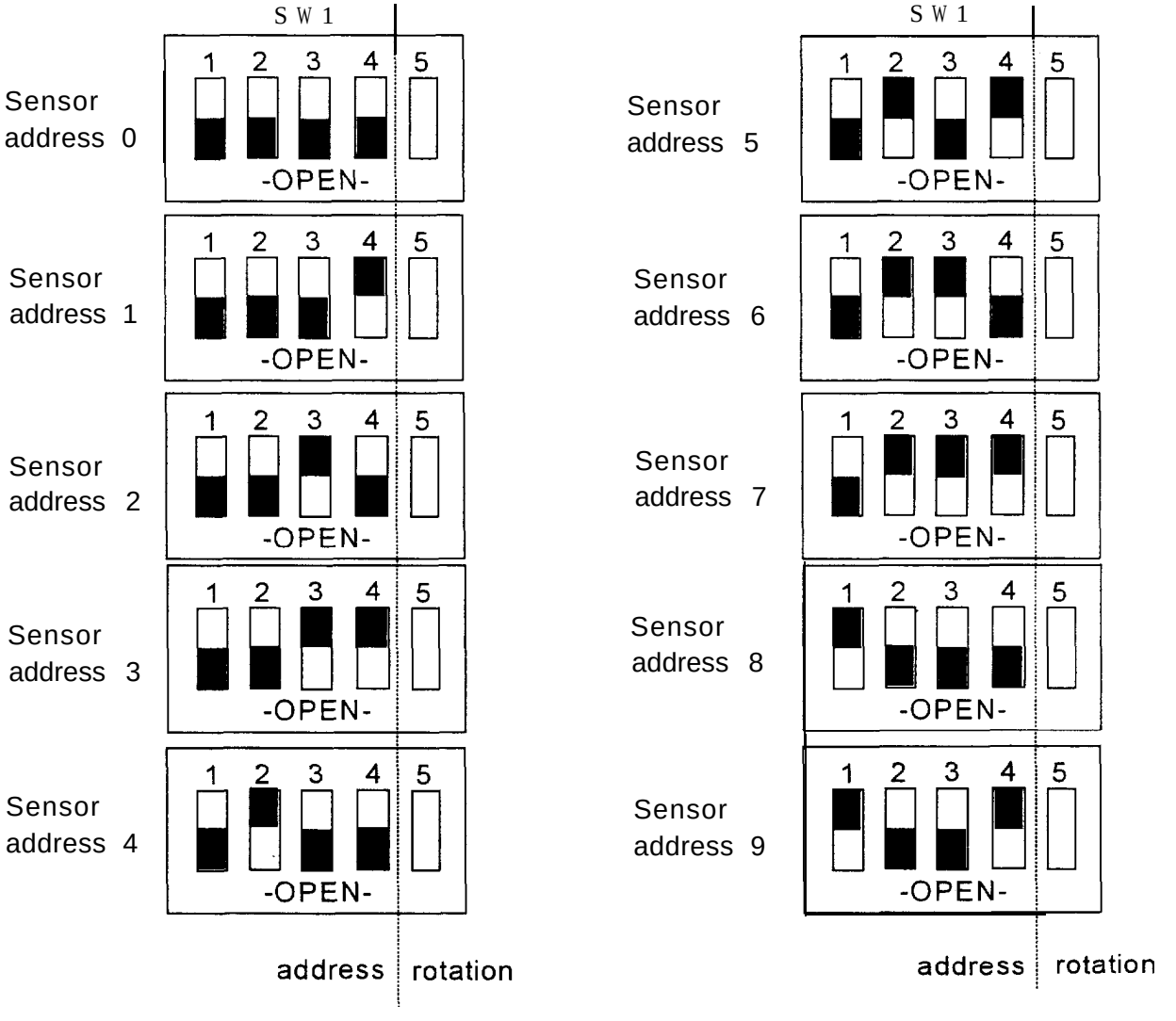

SENSOR ADDRESS SELECTION ON SW1

FIGURE 6

which allows up to 10 sensors to be connected simultaneously. The default sensor address is 0 and all single sensor installations will use 0 unless specifically changed by a user for a multiple sensor installation. The LID's user must select the address of the sensor whose data are to be monitored. This is done by setting the positions on a DIP switch to the binary code that represents this address. Sensor addresses 0 through 9 require four positions on a DIP switch. Switch SW 1 on the LID printed circuit board is a five position DIP switch. The first four positions are used for selecting the address of the sensor to be monitored. The switch settings for sensor addresses 0 through 9 are depicted in Figure 6. Determine the address of the sensor to be

monitored and make the appropriate switch settings on SW 1. The address should be posted in the stage house and/or may be obtained from the USGS technician.

3.1.7.3 Parameter Number. Some SDI-12 sensors have the capability of reporting multiple values. For example, an H20 Water-Quality Sensor reports up to 8 data values. The SDI-12 specification states that a sensor can report up to 9 values (parameters) in response to inquiry by a data logger. If a parameter from a multiple-parameter sensor is to be monitored, the LID must know which parameter to intercept from the data values. The 4-position DIP switch labeled SW 2 on the LID's PC board is the parameter number switch. The user must set the positions on SW 2 to the proper binary code to represent the desired parameter number (1,2, ... 9) as shown in Figure 7. Determine which parameter from the desired sensor is to be monitored and make the appropriate switch settings on SW 2. Verify that the above information and the USGS programmed reading time (i.e., 3 minutes after the hour) and time interval (i.e., every 15 minutes), is permanently posted in the stage house. It will be needed for any subsequent actions with the LID.

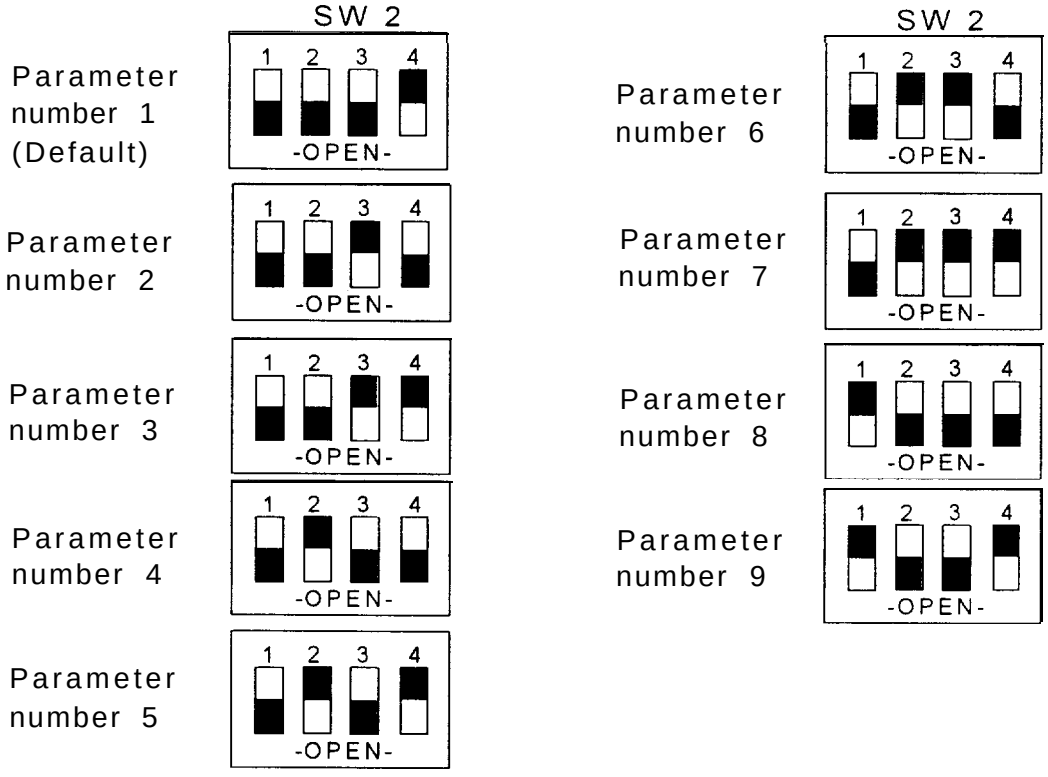

PARAMETER NUMBER SELECTION ON SW 2
Figure 7

3.1.8 Power (Step h). The LID receives power from the SDI-12 bus at 12 VDC, with power consumption at 4-6 mA while active (sending incremental signals) or 200 uA in standby. No other power connections are required. The LARC is powered separately by an NWS supplied source. Consequently, both the USGS and the NWS systems must be powered for NWS to collect data. The LID is designed so that no damage should result with either system powered

down and the other powered up. Power to the LID can be verified by using a voltmeter set to read 12 VDC and probing terminals J1-2 (pos) and J1-3 (gnd) of the LID input terminal.

3.1.9 LARC to Computer Connection (Step i). Connect a terminal or laptop computer to the LARC following the Handar manual and establish communication with the LARC.

3.1.10 Check the LARC Program (Step j). Verify that both the USGS system and the LARC have the appropriate program installed. **See Appendix C** for LARC programming example.

3.1.11 Clock (Step k). Set the clocks on the USGS data logging device and on the NWS LARC to the current time. There is no requirement for ultra precision or synchronization in setting these clocks.

3.1.12 Verify SDI-12 (Step l). USGS will verify proper operation of their logging device and SDI-12 bus operation. The USGS technician will also verify sensor operation and set the pressure sensor reading to the site's gauge. For verification in the absence of USGS, follow the direction under Troubleshooting in **Appendix A.**

After the SDI-12 bus transactions are set and verified, the NWS technician should:

3.1.13 Zero Check (Step m). Using the terminal/computer, verify that the shaft encoder input channel of the LARC is reading 0 (zero) or set it to zero. LID still OFF.

3.1.14 LID ON (Step n). Turn ON the power to the LID by setting the ON/OFF switch to ON (up position). The NWS LARC may receive a count of 0.01 or 0.02 when the LID is initially powered up. This is normal.

3.1.15 Wait for Data (Step o). The USGS technician should issue "measurement" and "send data" commands to the sensor that is being monitored. (Or, in the absence of USGS, wait the sample interval for a reading to be taken.)

Reminder. The LID updates its output to the LARC only after the appropriate "measurement" and "send data" commands are transmitted over the SDI-12 bus (a USGS data logger function).

3.1.16 Correct Reading (Step p)? Using the terminal/computer connected to the LARC, issue a forced read and verify that the correct data are received. The reading should jump from zero (or 0.01) to the stage reading all at once. If the reading is negative, see Section 3.1.g.1, **Setting the LID's Dip Switches, Direction of Rotation.**

3.1.17 Cause Change (Step q). If possible, deliberately change the reading of the SDI-12 sensor being monitored and have the USGS technician reissue the "measure" and "send-data" commands.

3.1.18 Check Reading (Step r). Check the reading (force read) on the LARC and verify that it follows the changes in the SDI-12 measurement data.

3.1.19 Reset (Step s). Reset the SDI-12 sensor to its proper readings (to match the reference gauge), reset the LID/LARC (if the action in q. and r. above resulted in a uncalibrated state for the system) and replace the LID's cover.

3.1.20 Reporting (Step t). When satisfied that the readings are correct, secure all loose wiring, close up all open instruments and cabinets, secure the facility, and report this activity in

accordance with Engineering Handbook No. 4 (EHB-4), Engineering Management Reporting System (EMRS) using the reporting code **LID.**

3.2 Resetting the LID/LARC. The LID cannot be reset remotely. Coordinate with the USGS to see if any site changes have occurred before proceeding to the site. The LID must be reset if any of the following changes are made to the system:

a. The SDI-12 recording device is replaced/removed.

b. The LARC is replaced/removed.

c. The SDI-12 sensor is replaced/removed

d. The address of the sensor to be monitored changes

e. The parameter number to be monitored changes.

If any of these functions are performed, verify that the SDI-12 system is powered and operating. Then remove power from the LID by setting its ON/ OFF, switch to OFF (down position). Clear the “current value” in the LARC to zero. Power ON the LID. Wait for a reading to be received from the pressure sensor. Check that the LARC has received the actual stage value. Wait for a second reading to appear. Verify that the LARC’s new reading is also correct.

4.0 MAINTENANCE AND LOGISTICS POLICIES

4.1 Delivery. The first LIDs and JB5’s will be delivered to the USGS Hydrologic Instrumentation Facility (HIF) for quality acceptance and storage in the USGS depot for distribution. They will be brought to the field sites for initial installation by the USGS field personnel. When the USGS is planning to replace a mercury manometer with a new gauge at a colocated site, they are required to contact and coordinate this activity with local NWS personnel. Specifically, these include the NWS service hydrologist, hydrologic focal point, and electronics technician. Site location and planned schedule of installation will need to be communicated to the NWS representatives. Installation times and site coordination will be agreed upon by both local USGS and NWS operational personnel/electronics technician(s). As stated in the MOU, both parties will need to be at the collocated site for river gauge and LID installation. Once contacted, the NWS electronics technician will contact NWS headquarters (WSH) to arrange the release and delivery of the LID to the USGS District Office for installation.

For delivery of the LID the following information is required by the WSH:
a. Site location,
b. USGS point of contact and mailing address for LID and JB5, and
c. Configuration of site, i.e., type (manufacturer and model number) of river gauge sensor and data logger being installed by USGS.

To obtain the cable adapter, please supply the following information to WSH:
a. Organization code, and
b. Task code.
The cable adapter will be initial issued at no cost, the task code is only for shipping cost

The request for the LID along with the required information may be accomplished via telephone or cc:Mail. The points of contact (POC) at WSH for LID orders and information are:

a. System Project Leader,	W/OSO321, 301-713-1834, x167 (Bobby G. McCormick)
b. Hydrology Program Engineer,	W/OSO31, 301-713-1845, x115 (David A. Desrosiers)
c. Special Projects Engineer,	W/OSO32, 301-713-0260, x158 (William G. Fellows)
d. Hydrologist,	W/OH22, 301-713-0006, x135 (Benjamin A. Weiger)

If there are specific questions on hydrologic items, please contact the hydrologist.

Once the site information and requirements are conveyed to WSH, the NWS POC(s) will initial issue the cable adapter to the NWS electronic technician and provide the ordering information to the USGS HIF, who will then release the LID and JB5 to the USGS district representative/POC.

4.2 Spares. The mean time between failures (MTBF) of the LID has yet to be established. However, a low failure rate is expected. During the initial installation period, 20 LIDs will be stocked at NLSC for spares. These spares will be accessible for emergency ordering only.

4.3 Incremental Shaft Encoder Disposition. The incremental shaft encoder and its associated hardware, obsoleted by the USGS upgrade, should be retained on station (i.e., the home station of the NWS electronics technician) as a spare and as a test signal source to verify LARC operation. Each region will use the removed Handar 436A incremental shaft encoder(s) in support of existing NWS LARC systems that use a shaft encoder.

4.4 Maintenance. The LID contains no user-serviceable parts and will require very little maintenance. Maintenance generally consists of checking the wiring to ensure that the wiring is not corroded or frayed. The technician should periodically inspect the wiring connections at the cable terminations to the recording devices and inside the LID at the terminal strip connectors.

4.5 Maintenance Responsibilities. The NWS electronics technician is responsible for LID maintenance and its associated JB5 after initial installation by the USGS and NWS. The USGS is responsible for the SDI-12 system (see Figure 1).

4.6 On-site Repairs. The basic field repair will be that of fault isolation to the lowest replaceable unit (LRU) and replacement of the LRU with a spare. The LID and the JB5 are both LRUs. The failed LRU will be returned to the National Reconditioning Center (NRC).

CAUTION. Any replacement action by an NWS technician which could result in a loss of power to the USGS data logger requires notification/coordination with the appropriate USGS District Office. This is required because: (1) the LID and the USGS sensors are powered from the USGS data logger through the SDI-12 bus; and (2) the JB5 is installed between the USGS data logger and the USGS sensor(s).

A power disruption on the SDI-12 bus, even momentarily, may cause a system setup reset, resulting in failed or erroneous readings for both systems.

4.7 EMRS Reporting. The equipment reporting code for the LID is **LID.** Report equipment activation of the LID in accordance with instructions in EHB-4, Part 2, Appendix C. All failed LRUs returned to the NRC should have a WS form H-14 attached.

4.8 Staffing Policies. No Impact.

5.0 WARRANTY

5.1 Limited Warranty. There is a 1-year warranty on all LID systems

5.2 Warranty Tracking. USGS is responsible for tracking LRUs and determining all warranty repairs. The NWS technician will follow normal ordering procedures for replacement LRUs from NLSC stock regardless of warranty status.

6.0 DOCUMENTATION.

6.1 Technical Information Package. Each NWS station on the EHB-10 mailing list will be provided a copy of this TIP.

6.2 Maintenance Schedule. A formal maintenance schedule will be published in the NWS EHB-10 for the LID, if required.

6.3 NWS EHB-1. The ordering information for all LIDs will be added to EHB-1, the Instrumental Equipment Catalog. Until EHB-1 has been updated, use the following part numbers and descriptions when ordering **replacements** from NLSC stock. LIDs, JB5s and 1CAs needed for initial installations will be ordered following the instructions in section 4.1 **Delivery.**

DESCRIPTION	PART NUMBER
LARC Interface Device (LID)	ASN D925-4
Box, Mini Junction (JB5)	ASN D925-JB5
Adapter, Cable (1 CA)	ASN D925-1CA

7.0 TRAINING

7.1 On-the-Job. The initial installation of the LID and checkout procedures will provide limited maintenance experience. This experience, in addition to the procedures contained with this TIP. will enable the electronics technician to perform the required maintenance and field level repair.

7.2 LARC Training. Training for the LARC system is no longer provided at the National Weather Service Training Center (NWSTC). Training for maintenance and programming of the LARC system is to be provided at the station level by the senior ET staff or by a regional specialist.

8.0 TECHNICAL AND PROGRAMMATIC DETAILS

8.1 Purpose. This section provides the NWS with detailed information applicable to the effort to modify the NWS equipment at joint NWS/USGS river gauge sites, undergoing upgrading through the USGS mercury manometer replacement program. This modification is applicable only to sites where the USGS is replacing a mercury manometer. No authorization is given or implied for the modification of other NWS LARC sites, in whole or in part, with the equipment described herein. Instructions are included describing the various configurations that may exist (or be installed) at the river gauge sites and cover the installation of the NWS LID, its connection to the NWS LARC, and to the different USGS pressure sensor/data loggers. This TIP contains detailed information about the LID, its installation and checkout, and provides example programming information for the LARC. This TIP provides the information which the NWS technician needs to identify, configure, and maintain the NWS LID in operation with the LARC.

An MOU provides the basis supporting a standard procedure to be followed when a site is upgraded with new USGS equipment (pressure sensor and data logger). The USGS district and the NWS weather forcast office (WFO) staffs must coordinate certain aspects of this upgrade effort at the local level. The USGS District Offices are listed in **Appendix D.** The aspects needing local coordination are:

a. Sampling Interval - For each site, the NWS service hydrologist must verify with the USGS district representative that the sampling interval, to be set into the USGS data logger (not just the NWS LARC), is appropriate for the site. **The new equipment does NOT operate as the old equipment did.** If NWS needs to see new data every 15 minutes then the USGS data logger must ask the pressure sensor for a new reading every 15 (or fewer) minutes. The USGS has agreed to try to accommodate NWS sampling requirements provided: (1) the USGS districts have the ability to program, and have a data logger that is capable of supporting multi-use sampling (phantom readings), and (2) it can be accomplished with minimal changes to the system (i.e., the USGS system has a sufficient power budget to accommodate the increased operations). The NWS Service Hydrologist should verify, with the USGS Representative, the sampling interval that is set in the USGS data logger. See Section 8.6, **System Constraints,** below.

b. Site Upgrade Schedules - The USGS districts independently set their upgrade schedules for this multi-year program. Through the MOU agreement, they will provide a **1-month** notification to the WFOs.

c. Equipment Physical Configuration - The USGS districts independently choose their equipment to be installed at each site. The attributes of the pressure sensor selected, will determine what USGS must install at each site. All NWS installations will be identical (see Figure 1).

d. Equipment Logical Configuration - Since the USGS data logger controls the information flow and the NWS is just a passive listener, the USGS has agreed to provide, and permanently post in the stage house, all logical configuration information necessary for future checkout and maintenance operations for the site. This includes: pressure sensor address and parameter number, start time and interval of measurement requests, mode settings for the pressure sensor and a POC for verification and trouble actions.

USGS has agreed to provide their technicians for use in the initial installation of the LID, its JB5, and for verifying proper SDI-12/LID to LARC operation. The NWS technician should be prepared to make the necessary changes to the LARC connections and LARC programming at the installation site.

8.2 General. The NWS and USGS share certain river gauging stations. The USGS is replacing their mercury manometers with various electronic pressure sensors. The new USGS electronic sensors do not provide the mechanical output that now drives the NWS incremental shaft encoder. The new USGS equipment uses a digital serial interface that follows the SDI-12 protocol. SDI-12 is a new industry standard sensor interface specification. The NWS LARCs are not compatible with this new standard. Therefore, the NWS will use the LID to allow the NWS LARCs to continue receiving stage data. The LID reads SDI-12 data and converts it to shaft encoder incremental data. Some of the new pressure sensors also have a shaft encoder emulation output that was designed to drive the LARC. However, there exists a condition when using this emulated output that could cause NWS to lose calibration of the stage and, therefore, the optional shaft encoder emulation output will **NOT** be used. A LID will be installed at all NWS sites. See Section 8.7, **LID - Required Usage,** for an explanation.

8.3 System Concepts. The SDI-12 interface standard defines a new communication protocol that is loosely based on the RS-232C standard. It simplifies hardware and handshaking requirements and establishes a command/response language for communications between a controller and the sensors. Only one controller is allowed on the bus because it controls all transactions on the bus with an “issue command wait for response” control structure. Typical commands are “sensor number 1 initiate a measurement," “sensor number 1 provide the data,” and “all sensors wake up a command is coming.” There can be up to 10 sensors on the bus, each with a unique address. The sensors communicate only in response to the controller and typically only send a single (maximum of 9) measurement(s) in reply to a data request.

8.4 Sampling. SDI-12 sensors will not provide data in the same manner as the standard Handar 436 shaft encoder. With the shaft encoder, as the shaft spins, pulses are generated at the time of motion of the shaft and must be collected as they occur. This means that the data collection equipment must listen CONTINUOUSLY in order to catch all the pulses. With the SDI-12 sensor, the controller asks for a reading and then the sensor provides it. This means that the data is received on a DISCONTINUOUS basis as it is asked for (sampled) and NOT as the data changes. The measurement received is also the current value at the sensor’s input and may not reflect any peaks or dips that may have occurred between readings. It is important to realize that, with a sampled system (as SDI-12 is), the sample interval must be set to at least twice (preferably 3-5 times) as fast as the fastest event desired to ensure capturing a maximum/minimum event.

8.5 LID. The LID is designed to interface most electronic data loggers and data collection platforms, which use shaft encoder data, to systems that provide the SDI-12 data. See Figure 1. The LID monitors the SDI-12 bus for transmissions of data between the recording device and sensor(s) connected onto the bus. When the user-selected sensor sends data over the bus, the LID senses the occurring data transmission, collects the data portion of the transmission, and updates its output. The LID ignores all transmissions that occur on the bus until it sees a data response (not a command) from the sensor whose address matches the one set into its memory (internal dip switches). The LID can collect data from only one sensor (one address). The output of the LID is updated only when new data passes over the SDI-12 bus. The update rate of the LID is determined by the data acquisition interval of the SDI-12 recording device requesting measurements from the desired sensor. Except for this discontinuous mode of operation, the output of the LID mimics that of an incremental shaft encoder (quadrature pulse train) with 0.01 unit resolution, or 100 counts per revolution.

The stage values transmitted over the SDI-12 bus are absolute values, not incremental. For example, if the river stage at three successive intervals is 20.0 ft, 20.0 ft and 20.3 ft, then 20.00, 20.00 and 20.30 is sent over the SDI-12 bus. In contrast with the above example, the LARC expects to see incremental values (the change from one reading to the next) and would need to see: 00.00, 00.00 and 00.30. The LARC takes these increments and adds (or subtracts) each increment to the initial value that was programmed in at setup. The LID converts the absolute values to incremental values by remembering two readings (the last one and the current one) and provides the difference between them as output. When the LID is initially powered and before any data is received from the bus, the “last value” is automatically set to zero. When the first data values are transmitted over the SDI-12 bus, the LID intercepts these, subtracts the “last value” from it and sends out the appropriate incremental pulses to represent the difference between zero and the new value. Therefore, the **initial** value from the LID will be the actual stage reading that the pressure sensor is reporting. The LID then remembers the present reading as “the last value” in order to subtract it from the next “present” value, thus completing a cycle. If the LID loses 12 volt power at any time, this process will be repeated when power is restored with the LID assuming a starting (last) value of 0. See Section 8.7, **LID - Required Usage,** for further explanation and ramifications.

8.6 System Constraints. Paragraph 8.3 serves to illustrate that new data is ONLY available after it has been requested by the controller. If the USGS data logger asks for a reading once per hour, and the NWS LARC is set to log readings four times per hour, then all four LARC readings will be exactly the same because no new data has moved across the bus. NWS needs readings more often than USGS. A solution is for USGS to ask for one regular logged reading and three phantom (unlogged) readings per hour. This would put four data requests out to the sensor so that NWS would be updated every 15 minutes, while only logging data into the USGS data logger once per hour. This capability does exist and is available for all surveyed SDI-12 data loggers that USGS may use. If the districts need help in programming this, direct them to the USGS HIF (see **Appendix D).** This also affects the power budget for the site, as more frequent readings will shorten expected battery lives. When the pressure sensors are active they typically draw about 6-8 mA. When not taking a measurement, they are inactive and draw only a few micro amperes. The NWS service hydrologist must be aware of this USGS system impact when negotiating for an acceptable sampling rate for each site. The USGS has agreed to try to accommodate our sampling rate requirements where possible, within the following constraints: the planned data logger has this capability, the USGS district can program it for this action, and it is feasible within the planned site system constraints (or easily accommodated).

8.7 LID - Required Usage. Above, we stated that there is a condition affecting the direct-connection-to-pressure-sensor scheme that renders this option undesirable. The condition is based on the following constraints:

a. the pressure sensor and the LARC are separately powered, and

b. pressure sensors upon powering up, generally only output the difference between known successive readings.

The first constraint is the result of USGS providing the power for their instruments, NWS separately providing the power for its instruments, and NWS attempting to directly use the data from the USGS instrument. The second is the result of decisions made by the pressure sensor manufacturers in order to provide the emulated output. Neither of these are incorrect in themselves, but when combined as in our installation, there does exist a condition that could be a problem for NWS. To illustrate the problem, assume the river stage is rising, the LARC is directly connected to the pressure sensor encoder emulated output, the LARC has been set to the stage and has been collecting the incremental pulses to reach a calculated level of 20 feet,

when the pressure sensor loses power for a short while (reason for power loss is immaterial), the LARC, being powered from its own source, continues to collect data. Since the pressure sensor is off, no pulses are generated for the LARC to count (but, the river is still rising). Power to the pressure sensor comes back on and a first reading is taken. The pressure sensor does not output any data to the LARC, because there has been no previous reading from which to calculate the **difference.** The first reading is just stored in a “last reading” register of the sensor. At the next reading interval, a second reading is taken by the pressure sensor. This time there is a previous reading, the difference is calculated, and a number of pulses proportional to the difference between the last and the current reading, is output to the LARC.

From the viewpoint of the LARC and its operation, all is correct. There was a period of little change, but that is typical in most circumstances. In reality, there has been a loss of data and it is not DETECTABLE or RECOVERABLE. The only way to recover from this, is to do a real-time comparison with the USGS data, which neither matches our sampling rates nor is convenient.

Is the LID different? Yes. While the LID will also be powered by the USGS system. upon powering up, the LID does not wait for a second reading to output data. It takes the first reading, does a difference calculation using its LAST READING register (which was zeroed at power up) and outputs the appropriate number of pulses. In this case the first data out of the LID after power-up is the actual stage reading that the pressure sensor reports. Using the example, we can see that if the stage was 20 ft at power off, the stage value rose 0.3 ft more and then power came back on, the new reading as read by the LARC would be 20 ft + 20.3 ft (new stage reading) = 40.3 ft. Remember, the LARC does a totalization function. This signature is definitely detectable (flat line followed by a step **doubling),** and is also correctable (either in analysis or, remotely by resetting the LARC).

NOTE. Service hydrologists must be aware of this characteristic when interpreting the LARC data and when responding to any dial-up alerts triggered by the doubled reading. Awareness of this characteristic should also be made to the River Forecast Centers. The formula for recovery of the actual stage is:

(Step Reading Value) - (Flat Line Value) = Actual Stage Value.

Where:

Step reading value equals the value measured that represents a DOUBLING of the previous reading plus/minus some small increment (stage change during the OFF time)

Flat line value equals the value measured immediately before the step reading above. There may be one or more of these. If more than one, they will all be at exactly the same value. This represents the time that the pressure sensor was off.

Once the actual stage value has been calculated, it can be used as an offset to remotely reset the CURRENT VALUE reading in the LARC, thereby recalibrating it to the real world stage value.

There are additional cases where the data collected by the LARC will be erroneous. The SDI-12 specification is evolving and adding new capabilities. When the LID was designed, there was only 1 “measurement” command. Now there are many variations and modes available that will place different sensor data in the position that the LID is expecting to find the stage reading. The cases that employ commands that are unrecognizable by the LID will result in non-changing readings when they should be changing. The cases that are random events and only occur once in a logging interval (such as a technician, remotely requesting temperature from the sensor instead of the pressure), will result in a single point discontinuity of the data that can be eliminated with data smoothing or outlier discarding. The cases that are random events and

occur more-than-once in a logging interval will not recover to the actual stage reading, but will result in a deviation (offset) from the USGS data. The cases that are continuous and recognized by the LID (i.e. the USGS reprogramming the DCP after initial installation with one or more of the newer commands) will totally confuse the LID/LARC data and require coordination with the USGS to resolve. The LID was designed to respond to the SDI-12 measurement (aM!) followed by a send data (aDO!) command. Use of the aM1!, aM2!...aM9! commands may be recognized and interpreted by the LID as if it were the pressure data. The any sensor (?M#!), wildcard (*M#!) or the proposed “concurrent measurement” commands could supply the correct data, but will not be recognized by the LID.

These are the known causes/symptoms of incorrect data that are a function of the system characteristics, Additional NWS notes will be issued as new ones are identified. Contact the NWS engineering POC (see section 4.1) for help in resolving data interpretation problems related to these issues or to report new ones.

9.0 LARC SITES REQUIRING A LID. This table should be used for reference only. It was developed at the onset of the LID program and reflects the understanding at that time. Please contact the local USGS representative to obtain current schedules and plans.

Legend
Location Name q LARC station name (could contain river name as well)
Current Gauge M = Mercury manometer water level sensor
PS-2 = Parascientific SDI-2 water Level sensor
H-310 = Digital Associates water Level sensor
Year = approximate year of conversion to new water level sensor as provided by USGS.

Location Name	State	SID	USGS ID	Current Gauge	Year
Wisconsin Ave		GTND2	1647600	M	1995
Anchor Point	AK		15240000	M	1994
Glacier Cr Bruno Rd	AK		15237900	M	1995
Chena R @ Fairbanks	AK	FAIA2	15540000	M	1998
Fairbanks 9 NE	AK	CHLA2	15511000	M	1998
Anchorage	AK	ASCA2	15276000	M	1999
Houston	AK		15290000	M	2000
Red Bluff 99E Bridge	CA	RBLC1	11377100	M	1993
Felton 1S	CA	BTEC1	11160500	M	1994
Fernbridge	CA	FRNC1	11479560	M	1994
Pescadero 3E	CA	PECC1		M	1994
Carsons R- Woodsfords	CA	WOOC1	10310000	M	1994
Fort Dick R	CA	FTDC1	11532650	M	1994
Hacienda Bridge	CA	RIOC1	11467000	M	1994
Piru Telemetering	CA	PIRC1	11108500	M	1994
Arroyo Seco R	CA	ARRC1	11151870	M	1995
Bradley Telemetering	CA	BRDC1	11150500	M	1995
Chittendon Pass	CA	AROC1	11159000	M	1995
Robles Del Rio	CA	RDRC1	11143200	M	1995
Scotia Telemetering	CA	SCOC1	11477000	M	1995
Smith R - Hiouchi	CA	CREC1	11532500	M	1995
Spreckles Hwy Bridge	CA	SPRC1	11152500	M	1995
Altha	FL			H-310[1]	1996
Des Moines 18th St	IA	DEMI4	5484900	M	1997
Des Moines 14th St	IA	DESI4	5485500	M	1997
New Hartford	IA	NHR14	54630000	M	1997

[1] This site currently has a float gauge, however, they have plans to install a Digital Associates SDI-12 submersible pressure transducer in FY 96.

Location Name	State	SID	USGS ID	Current Gauge	Year
Saylorville Dm TW	IA	SDTI4	5481650	M	1997
Sioux City Perry Ck	IA	SIOI4	6600000	M	1996
Bedford 1 SSE	IA	BDFI4	6819185	M	2002
Clarinda 1 E	IA	ICLI4	6817000	M	2002
Colfax	IA	CFXI4	5471050	M	2002
Davis City	IA	DVSI4	6898000	M	2002
Des Moines Easton	IA	DFMI4	5485640	M	2002
Mingo 3 NW	IA	MGOI4	5471200	M	2002
Van Meter	IA	VNMI4	5484500	M	2002
Walnt Ck Des Moines	IA	DOSI4	5484800	M	2002
Weiser 10 ENE	ID	WSRI1	13266000	M	1994
Cambridge 2 NE	ID	CAMI1	13258500	M	1995
Enaville	ID	ENVI1	12413000	M	1996
Hailey No. 2	ID	HALI1	13139500	M	1997
Pocatello	ID	PIHI1	13075500	M	1998
Riggins/ Ltle Salmon	ID	RIGI1	13316500	M	1999
Murphysboro	IL	MURI2	5599500	M	1997
Plymouth	IN	PYMI3	5516500	M	1996
Mooresville	IN	MOOI3	3353800	M	1996
N. Manchester	IN	NOMI3	3328000	M	1996
Carlisle	IN	CRLI3	3342500	M	1996
Decatur	IN	DCRI3	4181500	M	1996
Frankton	IN	FTNI3	3348350	M	1996
Almo	KY	AMOK2	3610200	M	1994
Clay City 1 NW	KY	CYCK2	3283500	M	1994
Manchester No 2	KY	MCHK2	3281100	M	1994
Apex 2NE	KY	APXK2	3320500	M	1995
Little Falls Dam	MD	BRKM2	1646500	M	1994
Halstad	MN	HLSM5	5064500	M	1997
Long Prairie	MN	LGPM5	5245100	M	1996
Marshall	MN	MMLM5	5315000	M	1996
Garden City	MN	GRDM5	5319500	M	1996
Rapidan	MN	RPDM5	5320500	M	1996
Rochester	MN	RCHM5	5372995	M	1996
Mankato	MN	MNKM5	5325000	M	1996

Location Name	State	SID	USGS ID	Current Gauge	Year
Houston	MN	HOUM5	5385000	M	1996
Jackson	MN	JCKM5	5476000	M	1996
Sabin	MN	SABM5	5061500	M	1996
Hendrum	MN	HNDM5	5064000	M	
Steelville 2N	MO	SEEM7	7013000	M	1995
Sumner 2 SW	MO	SMNM7	6902000	M	1995
Chillicothe	MO	CHLM7	6899680	M	
12th Street Blue R	MO	KCTM7	6893590	M	
Union	MO	UNNM7		M	1997
Hannibal	MO	HNNM7		M	1997
Cape Girardeau	MO	CPGM7		M	1998
Booneville	MO	BOOM7		M	1997
Eminence	MO	EMCM7		M	1998
Agency	MO		6820500	M	
Gallatin	MO		6897500	M	
Kansas City			6893000	M	
Lake City	MO		6894000	M	
Prairie Hill	MO		6905500	M	
Smithville	MO		6821150	M	
St. Joseph	MO		6818000	M	
Trenton	MO		6899500	M	
Collins 10 ENE	MS	CLSM6	2472000	M	1997
Hattiesburg #2	MS	HATM6	2473000	M	1997
Philadelphia-Brnsde	MS	PLAM6	2481880	M	1997
Ross Barnett	MS	CBPM6	2484630	M	1997
Tylertown 9 NW	MS	TYTM6	2490500	M	1997
Tampico	MT	TMPM8	6172310	M	1995
Deer Lodge	MT	DLGM8	12324200	M	1996
Belfry 10 SW	MT	BFYM8	6207500	M	1996
Miles City Hwy Bdge	MT	MILM8	6309000	M	1996
Breien (river)	ND	BREN8	6354000	M	1994
Mandan	ND	MDNN8	6349000	M	1994
Regent	ND	REGN8	6350000	M	1994
Golden Valley 8S	ND	GDVN8	6339500	M	1995
Lark	ND	LRKN8	6348000	M	1995

Location Name	State	SID	USGS ID	Current Gauge	Year
Washburn (river)	ND	WSBN8	6341000	M	1995
Bantry 8E	ND	BANN8	5122000	M	1996
Grand Forks	ND	EGFN5	5082500	M	1996
Zap	ND	ZAPN8	6340000	M	1996
Fargo	ND	FGON8	5054000	M	1997
Hickson 1 E	ND	HICN8	5051522	M	1997
Kindred 2 SE	ND	KNDN8	5059000	M	1998
Neche	ND	NCEN8	5100000	M	1998
West Fargo	ND	WSFN8	5059500	M	1998
Enderlin	ND	ENDN8	5059700	M	1999
Hillsboro	ND	HGRN8	5066500	M	1999
Hardy	NE	HDYN1	6853500	M	1993
Beatrice	NE	BEAN1	6881500	M	1997
Genoa 2S	NE	GELN1	6793000	M	1997
Auburn 1 E	NE	ABRN1	6811500	M	1998
Dorchester 7 NW	NE	DRGN1	6880800	M	1998
Union 2 Se	NE	UION1	6806500	M	1999
Seward No. 2	NE	SWRN1	6880500	M	2000
Sparks Truckee	NV	STRN2	10348200	M	1996
Tracey	NV	SPKN2	10350400	M	1996
Fort Edward	NY	FTEN6	1327750	M	1994
Windsor 2 SE	NY	WSRN6		M	1995
Dover 2S	OK	DOVO2	7159100	M	1995
Blackwell	OK	BLKO2	7152000	M	1996
El Reno 1 N	OK	ELRO2	7239500	M	1998
Watonga 2S	OK	WATO2	7239300	M	1998
Pauls Valley	OK	PLVO2	7328500	M	2000
Tillamook 3 ENE	OR	TLMO3	14301500	M	1993
Mapleton 2 NNW	OR	MPLO3	14307600	M	1996
Agness 2N	OR	AGNO3	14372300	M	1996
Harrisburg	OR	HARO3	14166000	M	1996
Kerby 3 NNW	OR	KRBO3	14377100	M	1996
Springfield 4 NE	OR	SPRO3	14165000	M	1996
Three Lynx	OR	TLYO3	14209500	M	1996
Tiller	OR	TILO3	14308000	M	1996

Location Name	State	SID	USGS ID	Current Gauge	Year
Winchester	OR	WNRO3	14319500	M	1996
Winston 1 N	OR	WSNO3	14312000	M	1996
Camp Crook	SD	CACS2	6334500	M	1996
Dell Rapids 2 SW	SD	DERS2	6481000	M	1996
Faith 14 NW	SD	FTHS2	6359500	M	1996
Fort Pierre 3 S	SD	FTPS2	6441500	M	1996
Kadoka 6S	SD	KDKS2	6447000	M	1996
Parker 4NW	SD	PKRS2	6478690	M	1996
Scotland 5NE	SD	SCOS2	6478500	M	1996
Midland	SD	MIDS2	6441000	M	1996
Rapid at Rapid	SD	RCYS2	6414000	M	1996
Rapid Canyon Lake	SD	CYNS2	6412500	M	1996
Sioux Falls 4SW	SD	SIFS2	6482020	M	1996
Westport 1 N	SD	WESS2	6471500	M	1996
Crandall 2 NW	TX	CNLT2		M	1993
Bon Weir 2 ENE	TX	BWRT2		M	1995
Gladewater 3 WSW	TX	GDWT2		M	1995
Burkeville 10 NE	TX	BRVT2		M	1996
Ft. Worth Clear FK	TX	FWHT2		M	1996
Hico	TX	HICT2		M	1996
Dallas	TX	DALT2		M	1997
Deweyville	TX	DWYT2		M	1997
Rosser 3S (Trinity R)	TX	RSRT2		M	1998
Arlington 6 NE	WA	ARGW1	12167000	M	1992
Renton	WA	RNTW1	12119000	M	1992
Baraboo	WI	BABW3	5405000	M	1996
Neillsville 3 SW	WI	NEIW3	5381000	M	1996
Wisconsin Dells	WI	WDEW3	5406000	M	2000
Shawano 2 SSW	WI	SHAW3	4077400	M	2001
Sheldon	WI	SHEW3	5362000	M	2001
Babcock	WI	BBCW3	5402000	M	
LaFarge	WI	LAFW3	5408000	M	
Racine	WI	RACW3	4087240	M	
Glenville R	WV	GLW2	3152000	M	1997
Kermit R	WV	KRMW2	3214500	M	1997

Location Name	State	SID	USGS ID	Current Gauge	Year
Petersburg	WV	PETW2	1606500	M	1997
Pahaska	WY	PAHW4			

10.0 APPENDIX A, Troubleshooting.

The following table lists various problems that may occur with the LID along with suggested corrective actions. These procedures are to be tried in the field before contacting NWS Engineering.

Symptom	Action
No Data Received by LARC	a. Check all wiring connections and terminations. b. Check for 12 VDC in JB5 (verifies USGS sys is powered). c. Check the posted system configuration for address (verify SW 1) and parameter number (verify SW 2). d. Check program in LARC and verify LARC operation by using a shaft encoder to produce pulses for the LARC to count. e. Reconnect the LID and set a zero current reading in LARC, turn LID OFF and then ON (use switch), issue forced read to LARC, should see zero (or 0.01). f. Check posted system configuration for time of next update from the pressure sensor, wait, check LARC for change from zero. If changed and correct for stage, the LID/LARC are working. If changed and correct magnitude but negative, see negative reading. If changed and not correct value, see wrong reading. If not changed, notify USGS of a potential problem with their system and make arrangements to potentially replace the LID. There is not a convenient way to verify SDI-12 operation without accessing the controlling (USGS) data logger. A scope will only verify that something went over the bus. The LID only responds to properly addressed sensor data responses, not commands or other normal bus transactions. The LID only responds to an aM! followed by an aDO! commands. Verify that these are the only commands that the USGS is sending to the sensor.
Negative Reading	The fifth position of SW 1 will reverse the reading sense. See “Selecting the Direction of Rotation” Section 3.1.g.1, for more information.
Wrong Reading	Verify pressure sensor output - set current reading (current value) of I-ARC to zero, turn LID OFF then ON, issue forced read to LARC, verify reading of zero, wait for next measurement, examine read value, it should be the stage value (subsequent measurements should only increment by the difference in stage between last reading and current reading). If correct, the equipment is working. If still not correct, notify USGS of improper readings and request verification. If NO reading after appropriate measurement interval, follow “no data received,” above.

11.0 APPENDIX B, Handar Programming Set Table for Model 550A

ASCII TERMINAL KEY	No Of Prompts	DESCRIPTION
I	1	IDENTIFICATION.(Station identification number)
J	1	TIME. (Set clock to current time)
K	5	1. CALL MODE. (Determines the method of remote communications) 2. DARDC Baud (110/300) 3. Next Call Time. (Dials out) 4. Call Interval (Dials out at set Interval) 5. Dump Number of Scans
L	2	TELEPHONE NUMBER 1. (Area code) 2. (telephone number)
M	1	CHANNEL NUMBER (Channel number l-8)
N	8	MEASURE 1 Sensortype 4 Voice Code 7 Pos Diff Limit 2 Value/Increment 5 High Limit 8 Neg Diff Llmlt 3 Current Value 6 Low Limit
R	2	SET TIME TO LOG DATA 1 Next Log Time 2 Log Interval
S	1	NEXT LOG TIME (Displays time of next scan)
T	1	NEXT CALL TIME. (Displays next call out time, determined by call interval)
U		SCROLL UP. (Scrolls program up or back)
V		SCROLL DOWN. (Scrolls program to next prompt)
W	1	LAST. (Last logged data and time, RUN mode only)
X		CLEAR. (Displays current program)
Y		RUN MODE. (Initiates the run mode)
$		**CURRENT VALUE.** (Can be changed in the RUN mode only)
#		FORCED CALL OUT. (Displays current value, PROGRAM mode only)
!		SELF TEST. (Initiates self-test mode all data and program are erased; PROGRAM mode only)
?		PROGRAM MODE (Stops the RUN mode in order to reprogram)
Q		PROGRAM LIMITS.
^S		DUMP DATA (Asks for number of scans to list then dumps number of scans requested If available)
^C		TERMINATE DATA OUT
^D		LIST PROGRAM. (Lists the program, PROGRAM mode only)
(^= CONTROL KEY)		

12.0 APPENDIX C, NWS LARC Programming Example

Reference the Handar Programming set Table (appendix B) to enter the **PROGRAM** mode (? Command)

Chan	Prompt	User Input	Description
P	ID	12345AKB	Station identification number
P	Station Time	01:45:42	Set clock to current time
P	Call Mode	11	Modem mode, to or from LARC (provides CADAS format)
P	CADAS Baud (110/300)	110	110 Baud rate
P	Next Call Time	02: 05	Dials out at 2.05
P	Call Interval	06. 00	Dials out every SIX hours
P	Dump Number of Scans	16	Transmits Sixteen scans of data
P	Next Log Time	02:00	Data starts recording at 2:05
P	Log Interval	00:15	Records every fifteen minute thereafter
P	Tel # : Area Code	0-000	Local call (no need to dial area code)
P	Tel # : Local	555-1212	Dial telephone number 555-1212 (at 2: 05)
PO2	Pos Diff Limit	00.25	550A dials out when precipitation reaches or exceeds 0.25 inch in 15 minutes
P	Channel No.	01	Channel 1
PO1	Sensor Type	01	Sensor type 1 -- Stage (Encoder #1)
PO1	Value/Increment	00.01	Level recorder in 0.01 foot increments
PO1	**Current Value**	0.0	Initial water level is 0.0 feet • *
PO1	Voice Code	63	Voice Code 63, spoken vocabulary “Level”
PO1	High Limit	12.00	Stage limit set at 12.00 feet
PO1	Low Limit	No Limit	No limit set
PO1	Neg Diff Limit	No Limit	No limit set

Reference the Handar Programming Set Table (appendix B) to enter the **RUN** mode (Y command)

**Zero the initial level, the first value passed after LID (not LARC) is powered up will be full stage value

13.0 APPENDIX D

13.1 USGS Technical Representatives

Hydrologic Instrumentation Facility

ROY JOHNSON
rajohn@usgs.gov
USGS/HIF
Bldg. 2101
Stennis Space Center, MS 39529
(800) 382-0634
Hours: 8 a.m. to 4:30 p.m. Central Time

13.2 USGS State Representatives

Alabama

JESS D. WEAVER
jdweaver@usgs.gov
520 19th Ave.
Tuscalloosa, AL 35401
Telephone: 205) 752-8104
Fax: (205) 752-9086
Hours: 7:30 a.m. to 4 p.m. Central Time

Alaska

PAUL BROOKS
pbrooks@usgs.gov
4230 University Dr., Suite 201
Anchorage, AK 99508-4664
907) 786-7111
Fax: (907) 786-7150

Also: Alaska District Chief
Gordon L. Nelson
glnelson@usgs.gov
U.S. Geological Survey
4230 University Dr., Suite 201
Anchorage, AK 99508
Telephone: (907) 786-7110
Fax: 907-786-7150
Hours: 7 a.m. to 4:30 p.m.
Alaska-Hawaii Time Western Regional Hydrologist

Arizona

NICK B. MELCHER
nmelcher@usgs.gov
375 S. Euclid Ave.
Tucson. AZ 85719
Telephone: 602) 670-6671
Fax: (602) 670-5592
Hours: 7:30 a.m. to 4 p.m. Mountain Time

Arkansas

ROBERT A. LIDWIN
ralidwin@usgs.gov
401 Hardin Rd.
Little Rock, AR 72211
Telephone: (501) 228-3602
Fax: (501) 228-3601
Hours: 7:30 a.m. to 4 p.m. Central

California

MICHAEL V. SHULTERS
shulters@usgs.gov
Room W-2233. Federal Building
2800 Cottage Way
Sacramento, CA 95825
Telephone: 916) 979-2605
Fax: (916) 979-2669
Hours: 7:30 a.m. to 4 p.m. Pacific

Colorado

DAVID J. LYSTROM
dlystrom@usgs.gov
Bldg. 53, Denver Federal Center
Mail Stop 415, Box 25046
Lakewood, CO 80225
Telephone: (303) 236-4882 Ext. 258
Fax: (303) 236-4912
Hours: 8 a.m. to 4:30 p.m. Mountain

Connecticut

VIRGINIA DeLIMA
vdelima@usgs.gov
Abraham A. Ribicoff Federal Building
450 Main St., Rm 525
Hartford, CT 06103
Telephone: (203) 240-3063
Fax: (203) 240-3783
Hours: 7:45 a.m. to 4:15 p.m. Eastern

Delaware

JAMES M. GERHART
jgerhart@usgs.gov
208 Carroll Building
8600 LaSalle Rd.
Towson, MD 21286
Telephone: (410) 512-4801
Fax: (410) 512-4810
Hours: 8 a.m. to 4:30 p.m. Eastern Time

District of Columbia

See Maryland

Florida

JOHN VECCHIOLI
jvecchio@usgs.gov
227 N. Bronough St., Suite 3015
Tallahassee, FL 32301
904) 942-9500 x3011
Fax: (904) 942-9521
Hours: 7:45 a.m. to 4:30 p.m. Eastern Time

Georgia

TIMOTHY W. HALE
twhale@usgs.gov
Peachtree Business Center, Suite 130
3039 Amwiler Rd.
Atlanta, GA 30360-2824
770) 903-9100
Fax: (770) 903-9199
Hours: 8 a.m. to 4:30 p.m. Eastern Time

Guam

See Hawaii Also:
Greg N. Ikehara
gnikehara@usgs.gov
Hydrologist-in-Charge
Subdistrict Office
U.S. Navy Public Works Center, Bldg. 104
Agana, GU 96540-1000
Telephone: (011) 339-5293
Hours: 8 a.m. to 4:30 p.m. Kilo Time

Hawaii

WILLIAM MEYER
wmeyer@usgs.gov
677 Ala Moana Blvd., Suite 415
Honolulu, HI 96813
808) 522-8290
Fax: (808) 522-8298
Hours: 8 a.m. to 4:30 p.m.
Alaska-Hawaii Time

Idaho

DERRILL J. COWING
dcowing@usgs.gov
230 Collins Rd.
Boise, ID 83702-4520
(208) 387-1316
Fax: (208) 387-1372
Hours: 7:45 a.m. to 4:15 p.m. Mountain Time

Illinois

STEPHEN F. BLANCHARD
sfblanch@usgs.gov
102 E. Main St., 4th Floor
Urbana, IL 61801
(2 17) 344-0037
Fax: (217) 344-0082
Hours: 8 a.m. to 4:30 p.m. Central Time

Indiana

LINDSAY A. SWAIN
lswain@usgs.gov
5957 Lakeside Blvd.
Indianapolis, IN 46278-1996
1317) 290-3333. Ext. 175
Fax: (317) 290-3313
Hours: 7:30 a.m. to 4 p.m. Eastern Time

Iowa

ROBIN MIDDLEMIS-BROWN
rgbrown@usgs.gov
P.O. Box 1230
Iowa City, IA 52244
Telephone: (319) 358-3600
Fax: (319) 358-3606
Hours: 7:45 a.m to 4:30 p.m. Central Time

Kansas

WALTER R. AUCOTT
waucott@usgs.gov
4821 Quail Crest Place
Lawrence, KS 66049
Telephone: 913) 832-3505
Fax: (913) 832-3500
Hours: 8 a.m. to 4:30 p.m. Central Time

Kentucky

RANDOLPH B. SEE
rbsee@usgs.gov
2301 Bradley Ave.
Louisville, KY 40217
Telephone: (502) 635-8080
Fax: (502) 635-8009
Hours: 8 a.m. to 4:45 p.m. Eastern Time

Louisiana

EDWARD H. MARTIN
ehmartin@usgs.gov
3535 S. Sherwood Forest Blvd.
Suite 120
Baton Rouge, LA 70816
Telephone: (504) 389-0281, Ext. 3107
Fax: (504) 389-0706
Hours: 7:45 a.m. to 4:30 p.m. Central Time

Maine

DERRILL J. COWING
dcowing@usgs.gov
26 Ganneston Dr.
Augusta, ME 04330
Telephone: (207) 622-8201
Fax: (207) 622-8204
Hours: 7:30 a.m. to 4:15 p.m. Eastern Time

Maryland

JAMES M. GERHART
jgerhart@usgs.gov
208 Carroll Building
8600 LaSalle Rd.
Towson, MD 21286
Telephone: (410) 512-4801
Fax: (410) 512-4810
Hours: 6:30a.m. to 5:30 p.m. Eastern Time

Massachusetts

WAYNE SONNTAG
wsonntag@usgs.gov
28 Lord Rd., Suite 280
Marlborough, MA 01752
Telephone: (508) 490-5002
Fax: (508) 490-5068
Hours: 8 a.m. to 4:30 p.m. Eastern Time

Michigan

CYNTHIA BARTON
cbarton@usgs.gov
6520 Mercantile Way, Suite 5
Lansing, Ml 48911
Telephone: 517) 887-8903
Fax: (517) 377-1627
Hours: 7:45 a.m. to 4:15 p.m. Eastern Time

Minnesota

GEORGE GARKLAVS
garklavs@usgs.gov
280 Woodale Dr.
Mounds View. MN 55112
Telephone: 612) 783-3106
Fax: (612) 783-3103
Hours: 8a.m. to 4:30 p.m. Central Time

Mississippi

GERALD L. RYAN
glryan@usgs.gov
100 W. Capitol St., Suite 710
Jackson, MS 39269
Telephone: (601) 965-4600 Ext. 5595
Fax: (601) 965-5782
Hours: 8 a.m. to 4:30 p.m. Central Time

Missouri

JAMES R. BARKS
jbarks@usgs.gov
1400 Independence Rd., Mail Stop 200
Rolla, MO 65401
Telephone: (314) 341-0825
Fax: (314) 341-0805
Hours: 7:30 a.m to 4 p.m. Central Time

Montana

ROBERT E. DAVIS
rdavis@usgs.gov
Federal Building, Rm 428
301 South Park Ave.
Helena, MT 59626-0076
Telephone: (406) 441-1322
Fax - (406) 441-1329
Hours: 8 a.m. to 4:30 p.m. Mountain Time

Nebraska

LINDA S. WEISS
lsweiss@usgs.gov
Rm 406 Federal Building
Lincoln, NE 68508
Telephone: (402) 437-5082
Fax: (402) 437-5139
Hours: 7:45 a.m. to 4:30 p.m. Central Time

Nevada

JON 0. NOWLIN
jonowlin@usgs.gov
333 West Nye Lane, Rm 203
Carson City, NV 89706
Telephone: (702) 887-7600
Fax: (702) 887-7629, 7621
Hours: 8 a.m. to 4:30 p.m. Pacific Time

New Hampshire

BRIAN R. MRAZIK
bmrazik@usgs.gov
525 Clinton St.
Bow, NH 03304
Telephone: (603) 225-4681
Fax: (603) 224-8714
Hours: 7:45 a.m. to 4:15 p.m. Eastern Time

New Jersey

ERIC J. EVENSON
eevenson@usgs.gov
810 Bear Tavern Rd., Suite 206
West Trenton, NJ 08628
Telephone: 609) 771-3901
Fax: (609) 771-3915
Hours: 7:45 a.m. to 4:15 p.m. Eastern Time

New Mexico

RUSSELL K. LIVINGSTON
livingst@usgs.gov
450 Indian School Rd., N.E., Suite 200
Albuquerque, NM 87110-3929
Telephone: (505) 262-5301
Fax: (505) 262-5399
Hours: 7:30 a.m. to 4:30 p.m. Mountain Time

New York

L. GRADY MOORE
lgmoore@usgs.gov
425 Jordan Rd.
Troy. NY 12180
Telephone:-(51 8) 285-5602
Fax: (518) 285-5601
Hours: 7:30 a.m. to 4 p.m. Eastern Time

North Carolina

GERALD L. RYAN
glryan@usgs.gov
P.O. Box 30728
Raleigh, NC 27622
Telephone: 919) 571-4044
Fax: (919) 571-4041
Hours: 8 a.m. to 4:45 p.m. Eastern Time

North Dakota

WILLIAM F. HORAK
wfhorak@usgs.gov
821 E. Interstate Ave.
Bismark, ND 58501-1199
Telephone: 701) 250-4606
Fax: (701) 250-4252
Hours: 8 a.m. to 5 p.m. Central Time

Ohio

STEVEN M. HINDALL
shindall@usgs.gov
975 West Third Ave.
Columbus, OH 43212
Telephone: (614) 469-5553 Ext. 112
Fax: (614) 469-5626
Hours: 7:30 a.m. to 4:30 p.m. EasternTime

Oklahoma

KATHY D. PETER
kdpeter@usgs.gov
202 N.W. 66 St.. Building 7
Oklahoma City. OK 73116
Telephone: (405) 843-7570
Fax: (405) 843-7712
Hours 8 a m to 4:45 p.m. Central Time

Oregon

DENNIS D. LYNCH
ddlynch@usgs.gov
10615 S.E. Cherry Blossom Dr.
Portland, OR 97216
Telephone: 503) 251-3202
Fax: (503) 251-3470
Hours: 7:30 a.m. to 4:30 p.m. Pacific Time

Pennsylvania

GARY PAULACHOK
gnpaulac@usgs.gov
840 Market St.
Lemoyne, PA 17043-1586
Telephone: (717) 730-6910
Fax: (717) 730-6997
Hours: 7:30 a.m. to 4 p.m. EasternTime

Puerto Rico/U.S. Virgin Islands

RAFAEL W. RODRIGUEZ
rrodrigu@usgs.gov
P.O. Box 364424
San Juan, PR 00936-4424
Telephone: (809) 749-4433
Fax: (809) 749-4462
Hours: 7:45 a.m. to 4:30 p.m. Atlantic Time

Rhode Island

WAYNE SONNTAG
wsonntag@usgs.gov
28 Lord Rd. Suite 280
Marlborough, MA 01752
Telephone: (508)490-5002
Fax: (508) 490-5068
Hours: 8 a.m. to 4:30 p.m. Eastern Time

South Carolina

GLENN G. PATTERSON
gpatter@usgs.gov
320 Gracern Rd.
Stephenson Center, Suite 129
Columbia, SC 29210
Telephone: (803) 750-6107
Fax: (803) 750-6181
Hours: 7:45 a.m. to 4:30 p.m. Eastern Time

South Dakota

KENNETH L. LINDSKOV
kllindsk@usgs.gov
1608 Mt. View Rd.
Rapid City, SD 57702
Telephone: (605) 394-1780
Fax: (605) 394-5373
Hours: 6:30 a.m. to 4:30 p.m. Mountain Time

Tennessee

HAROLD C. MATTRAW, JR.
hmattraw@usgs.gov
810 Broadway, Suite 500
Nashville, TN 37203
Telephone: (615) 736-5424 Ext. 3123
Fax: (615) 736-2066
Hours: 7:45 a.m. to 4:45 p.m. Central Time

Texas

RICHARD 0. HAWKINSON
rohawkin@usgs.gov
8011 Cameron Rd., Building 1
Austin, TX 78754-3898
Telephone: 512) 873-3002
Fax: (512) 873-3090
Hours: 7:45 a.m. to 4:30 p.m. Central Time

Utah

KIMBALL E. GODDARD
kgoddard@usgs.gov
1745 West 1700 South
Rm 1016 Administrative Building
Salt Lake City, UT 84104
Telephone: 801) 975-3350
Fax: (801) 955-3424
Hours: 8 a.m. to 4:30 p.m. Mountain Time

Vermont

BRIAN R. MRAZIK
bmrazik@usgs.gov
525 Clinton St.
Bow. NH 03304
Telephone: (603) 225-4681
Fax: (603) 224-8714
Hours: 7:45 a.m. to 4:15 p.m. Eastern Time

Virginia

PIXIE HAMILTON
pahamilt@usgs.gov
3600 West Broad St., Rm 606
Richmond, VA 23230
Telephone: 804) 278-4750
Fax: (804) 358-0476
Hours: 8 a.m. to 4:45 p.m. Eastern Time

Washington

CARL R. GOODWIN
cgoodwin@usgs.gov
1201 Pacific Ave., Suite 600
Tacoma, WA 98402
Telephone: (206) 593-6510
Fax: (206) 593-6514
Hours: 7:45 a.m. to 4:30 p.m. Pacific Time

West Virginia

DAVID P. BROWN
dbrown@usgs.gov
11 Dunbar St.
Charleston, WV 25301
Telephone: (304) 347-5130
Fax: (304) 347-5133
Hours: 7:30 a.m. to 4 p.m. EasternTime

Wisconsin

WARREN A. GEBERT
wagebert@usgs.gov
6417 Normandy Lane
Madison, WI 53719-1133
Telephone: 608) 276-3801
Fax: (608) 276-3817
Hours: 8 a.m. to 4:30 p.m. Central Time

Wyoming

BARNEY D. LEWIS
bdlewis@usgs.gov
2617 E. Lincolnway, Suite B
Cheyenne, WY 82001
Telephone: 307) 778-2931, Ext. 2728
Fax: (307) 778-2764
Hours: 8 a.m. to 4:30 p.m. Mountain Time

PART 3 HYDROLOGIC EQUIPMENT (EHB-10)

3. Equipment Modification Notes. Modification notes are the only documents serving to authorize the installation of modifications to instrumental equipment and systems. They provide the step-by-step installation instructions to be followed by authorized personnel in altering circuit and mechanical configurations of equipment. The purpose of any modification is either to enhance safety, maintainability, reliability, or incorporate a change necessitated by an operational requirement not previously designed into the equipment. Most modifications are the result of monitoring field reports relating to equipment failures and operational effectiveness. Other inputs result from suggestions submitted by electronics technicians and regional headquarters staffs. State-of-the-art changes are incorporated through NWS Office of Systems Operations Engineering Division personnel efforts to extend the useful life of equipment and to overcome logistics problems.

Copies of all modification instructions are provided to each electronics technician, so he will have available the necessary information to perform the modification if equipment is encountered that has not previously been modified. The instructions are issued in numerical sequence by date and by equipment type. In this manner rapid verification by the technician will determine whether all modification notes have been received and incorporated into the equipment. Copies of missing modification notes should be requested through the NLSC.

MODIFICATION INDEX - HYDROLOGIC GAGING

Number	Date of Issue	Title
1	April 28, 1971	Updating of the Fischer & Porter Model 1548 Precipitation Gage
2	October 2, 1973	Updating of the Fischer & Porter 1558(A1) and 1559(A1) Precipitation Gages
4	November 22, 1976	Standardization of Fischer & Porter Precipitation Gage Wiring
	April 28, 1977	Revised Page 5 and Figure 3 for Modification 4
5	March 8, 1977	Conversion of AC Type Fischer & Porter Precipitation Gages to DC Operation
6	November 16, 1982	Conversion of DC Type Fischer and Porter Precipitation Gages to a Rechargeable Battery with Solar Cell
7	May 22, 1985	Installation of a 436A Handar Incremental Shaft Encoder to the Fischer and Porter (F&P) Precipitation Gage
8	October 31, 1988	Installation of a Shaft Encoder to the Precipitation Gauge
9	January 30, 1989	Update of the Encoder Bracket Assembly for Weighing Gauges

Item 3 deleted.

U.S. DEPARTMENT OF COMMERCE
National Oceanic & Atmospheric Administration
National Weather Service
SILVER SPRING, MD. 20910

April 28, 1971

IN REPLY REFER TOW 5 1 4

TO : All Regional Headquarters, Area Electronic Supervisors, Electronics Technicians, and Substation Network Specialists (SNS)

FROM : Chief, Engineering Division

SUBJECT: Transmittal Memorandum for Engineering Handbook No. 10, Issuance 71-3

1. Material Transmitted:

Engineering Handbook No. 10, Hydrologic Equipment, Section 3.1; Hydrologic Gaging Modification No. 1 Updating of the Fischer & Porter Model 1548 Precipitation Gage.

2. Summary:

Modification No. 1 provides instructions to perform modifications which will modernize the Fischer & Porter Model 1548 Precipitation Gage and make it the mechanical and electrical equivalent of the later model Fischer & Porter Model 1559 (A2) Gage.

3. Effect on Other Instructions:

The wiring diagram (Figure 7) of the Model 1548 Instruction Manual (F&P 35-1548) is replaced by one copy of Figure 1 attached. This applies only to instruction manuals directly related to a modified gage.

J.A. Cunningham

J.A. Cunningham

U.S. DEPARTMENT OF COMMERCE
National Oceanic & Atmospheric Administration
National Weather Service
SILVER SPRING, MD. 20910

IN REPLY REFER TO:

Engineering Division W514

HYDROLOGIC GAGING MODIFICATION NO. 1
(For Electronics Technicians and Substation Network Specialists)

SUBJECT : Updating of the Fischer & Porter Model 1548 Precipitation Gage

PURPOSE : To Improve the Performance of the Model 1548 Gage and to Make It the Mechanical and Electrical Equivalent of the Model 1559 (A2) Gage

EQUIPMENT AFFECTED: Fischer & Porter Model 1548 Precipitation Gage

PARTS PROVIDED :
1 ea. Lower Case Assembly, F&P #612A286UO1
1 ea. Base, F&P #624A502U01
1 ea. Bracket, Tape Supply, F&P #353B998U01
1 ea. Spool Assembly, Left, F&P #665A994X99
1 ea. Spool Assembly, Right, F&P #665A995X99
1 ea. Tray, Battery, F&P #354D239U01
4 ea. Flexure, Horizontal, F&P #424K047N41
4 ea. Flexure, Vertical, F&P #424K048N41
1 ea. Bracket, Drive Motor, F&P #353A267A50
1 ea.' Cam Assembly, Motor Switch, F&P #660A109X99
1 ea. Sprocket, F&P #422F006X60
2 ea. Retainer, Spring, F&P #323B086U01
1 ea. Switch Cover, F&P #6418022U01
1 ea. Punch Block, F&P #406B151U01
1 ea. Punch Holder & Die Assembly, F&P #625A401X99
1 ea. Pawl, Feed, Lower, F&P #400D038T12
1 ea. Identification Plate
3 ea. Metal Identification Tag Retaining Pins

TIME REQUIRED : 12 Man-hours

EHB-10
Issuance
71-3 4-28-71

GENERAL--The Fischer & Porter Model 1548 Precipitation Gages are the first of a series of well over twelve hundred binary-coded decimal (BCD) punched tape precipitation gages in use throughout the Weather Service. From experience gained with the Model 1548 gages many improvements were made to succeeding models, the 1558 and 1559 (A1) gages, and later, the 1559 (A2) gage.

Some of the difficulties experienced with the Model 1548 gage are:

1. The gage access door is too small, causing tape replacement and adjustment difficulties, especially for elderly, less-skilled volunteer observers. A large door lower case assembly and latch, together with a matching base, similar to the Model 1558 and 1559 components, are provided with this modification kit.

2. Tape sprocket fails, due to inferior quality of sprocket material and incor rect lower feed pawl adjustment. A new stainless steel sprocket and a redesigned lower feed pawl are provided with this modification kit.

3. The mechanical drive cables are prone to come out of their grooves in the gear and shaft assembly. This was overcome in most of the Model 1548 gages and all later gages by the use of pulley guide rings. Installation of the pulley guide is not covered in this modification.

4. Use of an identifying punch at the extreme left edge of the punched tape (called an “80 punch”) during manual (test) punchout greatly increased the chance of accidental bending of the punches. To minimize this possibility, it was necessary to add to the gage a rather complicated light and switch circuit, which tells the operator when to release the manual punch button. This identifying punch is no longer required, consequently the light and switch circuit, and related mechanical linkage, will be eliminated during this modification.

5. A narrow, sharp-edged metal motor switch cam assembly caused excessive wear to the punch motor switch (leaf switch), necessitating frequent critical switch adjustments. A new plastic cam and an improved motor mounting bracket, allowing wider switch adjustment range, are provided for replacement.

6. The tape supply assembly of the Model 1548 gage presents some problems, especially when the tape roll is low. The new tape supply bracket and spool assembly supplied with the kit are identical with those of the Model 1558 and 1559 gages, and represent an improvement in this area.

Other components in the kit are furnished for the purpose of replacing worn or damaged parts. For instance, the horizontal and vertical flexures need not be installed if the originals are not defective, that is, if they are not cracked or bent in the shape of a "V". They should be kept as spares. If the punch and die block has never been replaced, it is suggested that the replacement be made at this time. If the original block has been replaced recently and the present one is punching cleanly the new unit should be held as a spare. The battery tray, in most cases, should be replaced. All replaced components should be disposed of locally except for the sprocket. This component should be returned by mail to the following address:

NOAA-National Weather Service
Engineering Division, W514
8060 - 13 Street
Silver Spring, Md. 20910

An "ON-OFF" toggle switch with an adapter plate, to be installed in place of the removed indicator light, will be furnished separately. This item is not listed in the "Parts Provided". list.

When the modification is completed, the gage will be almost identical to the Model 1559 Design Sequence A2 Gage. Very few of the unique Model 1548 parts will be needed for replacement. For example, the punch motor leaf switch used with the Model 1548 (WS Stock No. D111-A151, with five leads and terminal lugs), should be ordered, when required, as WS Stock No. D550-A106, Switch Assembly, leaf, six leads, 10 inches long, paired with three terminal lugs. Also, the manual pushbutton switch should be ordered as WS Stock No, D111B-S170 or D550-S101 when required. This switch is a single pole, single throw unit. The old Model 1548 switch (D111-S140) is a double pole, single throw switch and is harder to operate.

This modification is an extensive one and requires disassembly and reassembly of components containing small parts which can easily be lost. It is recommended that, if possible, the gage be removed to the ELTEC's or SNS' shop for the work, and that the work bench or table be clean and well lighted.

One of the new Fischer & Porter precipitation gage repair modules, if available, may be used to advantage at this time. Refer to Hydrologic Gaging System Maintenance Note No. 37 (EHB-10 Issuance 70-3) for instructions and information on this unit. A close inspection of this module will reveal that all of the front plate improvements covered by this modification have been made to it. NOTE: The repair module has the F&P #406B151U01 punch block installed, resulting in a continuous "80 punch." Since it is no longer required, the punch in the extreme left of the punch holder and die assembly should be removed. Do not remove the punch block, F&P#406B151U01.

If it is not feasible to remove the Model 1548 gage to a shop or work bench, it is suggested that the repair module be taken to the gage site, and installed after the base, spool assembly, and flexures, if required, are exchanged. The new lower case assembly can then be installed and the old Model 1548 front plate returned to the shop for the completion of the modification. NOTE: Be sure that, before the Ergas timer is installed on the repair module, all electrical modifications, removal of the indicator lamp, installation of the toggle switch, etc., are performed as described in Procedure Step 5.

Fischer & Porter Instruction Bulletin 35-9009 (EHB10-206) Maintenance Bulletin for Series 35-1548, 35-1558, and 35-1559 Precipitation Gage Recorder is an extremely valuable source of information on this gage. It should be referred to constantly while the gage modification is being accomplished.

Other manuals and information which, if available, should be kept ready forreference are:

1. Fischer & Porter Instruction Bulletin 35-1548 - Instruction Bulletin for Model 1548 Precipitation Gage Recorder (EHB10-200).

2. Fischer & Porter Parts List 35-1548 Revision 1 - Parts List for Series 1548 Precipitation Gage-Recorder (EHB10-201).

3. Fischer & Porter Instruction Bulletin 35-1558-1 - Instruction Bulletin for Series 35-1558 and 35-1559 Precipitation Gage-Recorder, Design Sequence A2 (EHB10-204).

4. Fischer & Porter Parts List 35-1558-1 - Parts List for Series 35-1558 and 35-1559 Precipitation Gage-Recorder, Design Sequence A2 (EHB10-205).

PROCEDURE.--

1. Remove the hood, collector bucket, and lower case assembly from the Model 1548 gage. Remove the paper tape and chad tray.

2. Exchange the base castings using the following procedure:

   a. On the Model 1548 base, remove the telemetering terminal strip retaining screws and the cable clamp retaining screw. The terminal strip and cable should now be free from the base. If the gage does not have telemetering equipment, this step can be ignored.

   b. Remove the three 1/4”-20 hexagonal cap screws and lock washers which fasten the gage to the three support posts. The weighing mechanism and front plate assembly are now free.

c. Prepare a stable surface which can hold the mechanical assembly temporarily in an upright position. Two bricks or two 2 X 4's placed about six to eight inches apart on a flat surface should suffice. Carefully lift the assembly off the base and place it on the stable support surface with the dashpot between the supporting blocks. CAUTION: The front plate assembly is loose and may fall away if the mechanism is tilted.

d. Unscrew the three support posts from the old base and transfer them to the new base.

e. Carefully remove the instrument identification plate from the old base and install on the new base. The original pins must be pried off and probably will be destroyed. Use the three new pins supplied with the kit to reinstall the plate. The tag location on the new base is on the left front adjacent to the tape supply bracket (viewed from the front). If a blank tag is already on the new base, remove it.

f. Cut away the top half of the identification tag supplied with the kit, (the half containing the serial number) and discard. Fasten the lower half (containing the statement - Model 1548 converted to 1559 per SD35-1064) to the base directly in front of the tape supply spool location. The tag is self-adhering when the paper backing is removed; however, it may be necessary to use glue if it fails to stick.

g. The tape supply spool assembly should be already installed on the new base. If not, install it at this time. Refer to Fischer & Porter Parts List 35-1558-1, Page 3, for parts identification and location.

h. Carefully place the weighing mechanism and front plate assembly on the three support posts on the new base and secure with the screws and washers removed in Step b. Replace the telemetering terminal strip and cable clamp removed in Step a.

3. Replace the flexures in the weighing mechanism if they are cracked or bent out of shape. Most of the flexures (there are four vertical and four horizontal) can be replaced without difficulty by the use of an appropriate size screwdriver, depending on the location of the flexures. Refer to Parts List 35-1558-1, Page 7, for flexure details.

If a flexure is difficult to replace, it may be advisable to disassemble the weighing mechanism to obtain easier access to the retaining screws. The following procedure is recommended. Refer to Parts List 35-1558-1, Pages 5 and 7, for part locations.

a. Remove the dashpot stem and washer assembly from the weighing mechanism support arm. This can be done by inserting an Allen wrench into the hole of the stem and washer assembly, and twisting clockwise, viewed from above. When the stem is unscrewed, let it sink into the dashpot. It is not necessary to remove the dashpot.

b. Remove the upper and lower mechanical drive cable assemblies from the weighing mechanism. It is not necessary to remove the cables from the pulleys.

c. Turn the zero adjust knob counterclockwise (viewed from above) until the main spring can be removed. Remove the main spring.

d. Remove the four 1/4”-20 hexagonal bolts and lock washers which hold down the weighing mechanism. The mechanism is now free and can be removed.

e. Replace the flexures as required. Refer to Parts List 35-1558-1, Page 7, or Parts List 35-1548, Page 3, for flexure details.

f. Reinstall the weighing mechanism but tighten the four hexagonal bolts only finger tight.

g. Reinstall the dashpot stem and washer assembly. Tighten the stem with an Allen wrench through the hole in the stem.

h. Slowly raise and lower the weighing mechanism and listen for any scraping or binding in the dashpot. If there is binding shift the weighing mechanism frame until the dashpot is clear. Tighten the four hexagonal mounting bolts to secure the weighing mechanism. (Dashpot drag is a prime cause of gage insensitivity.)

i. Replace the main spring. Tighten the zero adjust knob a few turns to be sure the main spring hook is well engaged. Be sure that there is no twist in the spring. The ELTEC or SNS is advised to familiarize himself with the weighing mechanism principles and adjustments as presented on Pages 1 and 2 of the Fischer & Porter Maintenance Bulletin 35-9009 (EHB10-206). A gage calibration is recommended at the conclusion of this modification.

4. At this point it is suggested that, if available, the replacement repair module be substituted for the Model 1548 front plate assembly, which can then be modified at the ELTEC’s or SNS’ shop. Instructions for installing the repair module are

contained in Hydrologic Gaging System Maintenance Note No. 37, Fischer & Porter Precipitation Gage Repair Modules (EHB10 Issuance 70-3).

If a repair module is not available, the Model 1548 front plate assembly will be modified as indicated below.

5. Remove the timer assembly from the gage and modify the electrical circuits (including the punch motor leaf switch) in the following manner:

a. From the manual pushbutton switch (S3) cut out the 10-ohm resistor and the violet lead which connects to the indicator lamp. The switch should now have only a blue and a yellow lead connected to it.

b. Cut the gray lead from the back side of terminal board TB1-F. TB1-F should now be completely free.

c. Remove and discard the indicator lamp assembly.

d. From the top two terminals of the punch motor leaf switchcut off the gray and white/green leads. Remove these leads from the cable assembly by pulling on the spade lugs connected to them. The leaf switch cable assembly should now contain only three leads - orange, yellow, and blue.

e. Remove the white/green battery lead from TB1-(-) and connect it to TB1-F. It will be necessary to cut back about one inch on the black spaghetti tubing to provide more lead length. The red battery lead remains connected to TB1-(+).

f. Install' the "OFF-ON" toggle switch in the hole left by the removal of the indicator light. The switch is provided with a white and a black lead, and a front plate designated "POWER-ON-OFF". The switch should be mounted so that the toggle operates horizontally. Tighten the retainingnut enough to anchor the switch firmly but not enough to distort the front plate. Make a continuity check for correct switch orientation, that is, handle to the left for "ON", to the right for "OFF". The white switch lead is connected to TB1-F, the black lead to TB1-(-). These connections should not be made, however, until the timer assembly is reinstalled, either on the gage or the repair module.

6. Refer to Parts List 35-1548, Pages 5 and 6. Remove and discard the arm and pin assembly, key numbers 42, 43, and 70. Do not remove the block and shaft assembly, key number 44. This eliminates the manual "80 punch" feature, which is now outmoded, but still retains the translator hole punch which is

needed. NOTE: The knob assembly on the manual punch switch located on the timer panel be retained since its larger surface aids in operating the push button switch. If this switch is replaced in the future, a D111B-S170 switch should be ordered. This switch is much easier to operate, and the knob assembly may be discarded.

7. Replace the punch motor bracket and motor switch cam assembly, using the following procedure:

a. Remove the complete punch motor assembly from the gage.

b. Remove the metal motor switch cam assembly from the programming shaft and install the new plastic (Delrin) cam in its place. NOTE: The cam can go on the shaft two ways, one 180° out from the other. Be sure that its position is approximately the same as that of the punch arm actuating cam. Refer to Parts List No. 35-1558-1, Page 10. The motor switch cam is key number 86, the punch arm actuating cam is key number 27.

c. Remove the punch motor switch assembly (leaf switch) and the plate cable clamp from the bracket and discard the bracket.

d. Reassemble the punch motor, motor switch and cable clamp on the new bracket provided. Refer to Parts List 35-1558-1, Page 17. NOTE: When installing the switch, reverse the positions of the bar nut (key No. 1) and bar washer (key No. 3) from those shown on Page 17. The screw heads will then be on the switch side of the bracket instead of the motor side. One of the switch mounting holes in the bracket is elongated allowing the switch to have a wider range of adjustment. The old metal cam wore a groove or a slot in the bakelite tip of the switch which led to early failure. The new plastic cam cannot cut into the bakelite and requires no lubrication. If the switch is carefully adjusted for the new cam, its working life should be greatly extended.

e. Do not install the complete punch motor assembly on the gage at this time since it is advantageous to have the programming shaft free for hand rotation while checking and making adjustments after the new parts have been replaced.

8. Replace the punch die block (Telemetering Gage). NOTE: If the punch die block has been recently replaced and is punching cleanly, do not replace. Keep the new block as a spare.

Use the following procedure as a guide in exchanging the punch die block. Refer to Parts List 35-1558-1, Page 10, for part locations:

a. Remove the punch arm spring, long screw, and elastic nut, (key numbers 45, 46, and 47).

b. Insert a small piece of paper tape (about 3 inches) in the punch slot to prevent loss of punches.

c. Loosen the retractor plate (stripper plate) slightly and raise the plate to clear the punches (key No. 61).

d. Lower the punch arm assembly (key No. 35). The tape guide should be loosened to provide clearance.

e. Remove the three telemetering contact retaining screws to release the contact arm and contact arm retainer.

f. Remove the three flat head screws holding the printed circuit board to the punch block. Carefully move the board and its insulator out of the way. NOTE: In the 1548 models the printed circuit board acts as the punch pin retainer. The punches are now free to fall out.

g. Carefully remove the four screws securing the punch holder and die assembly (punch die block) and remove it from the punch arm assembly.

h. Remove the punch retainer plate from the new punch holder and die assembly and install it on the old holder to retain the punches. NOTE: Most Model 1548 telemetering circuit boards serve as a punch retainer. Newer boards, however, are designed differently, and a retainer plate is needed and should be present. If one is needed, however, use the one that is provided with the new punch holder and die assembly. A piece of masking tape on the old punch holder will retain the punches. Refer to Maintenance Bulletin 35-9009 (EHB10-206), Pages 11 through 14, for punch and circuit board information.

i. Carefully install the new punch holder and die assembly on the punch arm using the four mounting screws. (Insert a piece of data tape in the punch slot to help retain the punches.)

j. Install the circuit board and insulator on the punch arm assembly. With the old Model 1548 circuit board use the three top flat head screws to secure it loosely, then adjust the circuit board position so that it retains the punches properly, that is, free to move but unable to come out. Tighten the three screws. Parts List 35-1548, Page 13, shows this type of circuit board arrange-

ment. The newer type of circuit board arrangement is shown in Maintenance Bulletin 35-9009, Page 14. This type is retained only by a clamp at the top and three screws at the bottom.

k. Install the contact arm, retainer plate, and cable support using the three truss head screws. Tighten the screws only friction tight and adjust the contact arm as shown in Figure 18 of Maintenance Bulletin 35-9009. If a piece of data tape is in the punch slot, the punches will be kept in a raised position so that the contacts can be positioned underneath the punch tabs. Use a flat metal bar or a flat piece of wood about two inches long to simultaneously depressall the contact springs during the positioning procedure. The contact arm must be so adjusted that the contacts do not press against the punches and cause them to bind. A very slight gap is necessary. Refer to Figure 18 of Maintenance Bulletin 35-9009. Another method of adjustment, which requires considerable care, is to position the contact arm above the punch tabs, tighten the screws when the clearance is correct, and then with a small screwdriver, move each contact finger to the side and under its corresponding punch tab. This must be done carefully in order not to distort the springy fingers. NOTE: Do not reinstall and adjust the punch arm assembly until the sprocket is replaced as directed below.

9. Replace the punch die block (non-telemetering gage). Use the procedures in Step 8, Sections a, b, c, d, g, and i. Refer to Maintenance Bulletin 35-9009, Pages 11, 12, and 13 for punch information. NOTE: Do not reinstall and adjust the punch arm assembly until after the sprocket replacement.

10. Replace the sprocket. Remove the complete tape supply bracket and spool assembly from the base to provide working space. The following procedure is recommended. Refer to Parts List 35-1558-1, Page 10, for part locations:

a. Loosen the set screws on the two bearing block assemblies (key 48) and gently remove the two punch arm shafts (key 53). Careful y remove the punch arm assembly (keys 35/36) so that the two teflon washers (key59) are not damaged.

b. Remove the left (viewed from the front) bearing block assembly (key48) and the sprocket assembly. Retain the spring (key 57) and the two phenolic washers (key 58) for use with the new sprocket. (Return the old sprocket to the NWS Headquarters, Engineering Division, Attention W514.)

c. Assemble the sprocket components on the new stainless steel sprocket as shown on Page 10. The phenolic washers (key 58) and the spring (key57) are from the old sprocket; the white plastic retainers (key56) are new, furnished with the kit. The white retainers enclose the spring and will fit together in

the sprocket cavity when compressed. Smooth off any rough projections on the retainers which may interfere with the complete compression of the assembly into the cavity.

d. Position the spring and retainers in the sprocket cavity so that they will compress, add the phenolic washer, and insert the right end of the sprocket into the right-hand bearing block on the front plate assembly. It may be necessary to rotate the sprocket slightly backward and forward to get the two plastic retainers to interlock and compress. When in position and compressed, add the phenolic washer and left bearing block to the sprocket, and secure the bearing block to the front plate with its mounting screw.

e. Loosen slightly the mounting screws on both bearing blocks (key48) and squeeze them to take up all end play in the sprocket assembly. Tighten the bearing block mounting screws. This is done in order to provide maximum clearance for the installation of the punch arm assembly and its teflon washers. The left-hand bearing block has very little adjustment range while the right-hand block can be moved an appreciable distance. A trial fitting of the punch arm assembly on the bearing blocks (without the teflon washers) should show a slight end play of a few thousandths of an inch. If there is no end play repeat the loosening, squeezing, and tightening of the bearing blocks.

f. Remove and lay aside, temporarily, the two Allen set screws from the bearing blocks (key48). Fasten the two teflon washers (key 59) into position on the bearing blocks as follows:

(1) Insert the punch arm shafts (key 53) into the bearing blocks and place the teflon washers over the shafts against the bearing blocks.

(2) Fold the protruding portion of the teflon washers over the front surface of the bearing blocks and tape into place with masking tape or scotch tape. (Tape only the front surface of the blocks.) Remove the punch arm shafts.

g. Carefully install the punch arm assembly over the teflon washers (key59) on the bearing blocks, and insert the punch arm shafts (key53) with the flats to the front so that they can be locked by the bearing block Allen set screws. Remove the masking tape and replace the Allen set screws. This can be a simple and quick operation, or a tedious one, depending on how much clearance is available at the punch arm and bearing block pivots. This is dependent on how well Step e was performed. The teflon washers are very soft and easily cut by the edges of the punch arm assembly or the bearing block. Use care in assembling.

h. When the punch arm is installed, loosen the bearing block mounting screws and adjust for the best compromise of end play in the sprocket and clearance at the punch arm assembly pivots. The objective is to obtain easy punch arm movement and minimize drag on the sprocket. Remember, there will always be a drag because of the compressed spring. Refer to Maintenance Bulletin No. 35-9009, Pages 8 and 9, for sprocket information.

11. An alternate method of replacing the sprocket is as follows:

a. Loosen the set screws on the two bearing block assemblies (key48) and gently remove the two punch arm shafts (key53). Carefully remove the punch arm assembly (key35/36) so that the two teflon washers (key59) are not damaged. Remove the telemetering cable so that the punch arm is completely free.

b. Grasp the sprocket and bearing block assembly firmly, remove the bearing block mounting screws (key50) and remove the complete assembly from the front plate.

c. Disassemble the assembly. Retain the spring (key57) and the two phenolic washers (key58) for use with the new sprocket. (Return the old sprocket to the NWS Headquarters, Engineering Division, attention W514.)

d. Assemble the sprocket components, including the bearing blocks, on the new stainless steel sprocket as shown on Page 10 of Parts List 35-1558-1. The phenolic washers (key58) and the spring (key57) are from the old sprocket, the white plastic retainers (key56) are furnished with the kit. Be sure to smooth off any rough projections on the plastic retainers which may interfere with interlocking and spring compression in the sprocket cavity.

e. Compress the assembly with one hand, hold it vertically and place one side on the edge of the gage base so that the front of the bearing block extends about one inch over the edge. Keep the assembly firmly compressed.

f. Install the punch arm assembly with one teflon washer on the top pivot hole. Keep the sprocket assembly fully compressed and make certain that the punch arm is square with the sprocket to avoid damage to the teflon washer, When the punch arm pivot hole and teflon washer line up with the bearing block hole, insert the punch arm shaft (key53) with the flat to the front of the punch arm. Use care to avoid losing any punches.

g. Turn the punch arm and sprocket over so that the other pivot hole is on top and insert the other teflon washer while keeping the sprocket assembly fully compressed. When the pivot hole and washer line up, insert the other punch arm shaft as in Step f and tighten both Allen set screws on the bearing blocks.

h. Install the complete punch arm and sprocket assembly on the front plate, squeeze the sprocket assembly to get optimum clearance at the punch arm pivots for minimum sprocket drag, and tighten the mounting screws. Reinstall the telemetering cable.

12. Replace the tape bracket and spool assembly. Refer to Parts List 35-1558-1, Page 3.

13. Refer to Parts List 35-1558-1, Page 10. Remove and discard the lower feed pawl (key68). Install the new lower feed pawl furnished and adjust it according to the instructions in Maintenance Bulletin 35-9009, Pages 10 and 11.

14. Adjust the punching mechanism. Refer to Maintenance Bulletin 35-9009, Pages 11 and 12. Adjust the stripper plate as described on Page 12, Section (9). NOTE: On telemetering gages make certain that the telemetering cable is correctly dressed and free from moving parts.

15. Adjust the cam follower as described in Page 13, Section (12). In most cases this will probably be just a check since the cam follower was not disturbed.

16. Replace the long screw, elastic nut, and punch force spring. A preliminary adjustment should be made now with the final adjustment to be made according to Page 13, Section (14). Hand rotation of the programming shaft will enable one to make the preliminary adjustment.

17. Replace the mechanical drive cables as described in Section B, Pages 2 and 3 of Maintenance Bulletin 35-9009. Use trial hand rotation punches to verify zero position.

18. Install the punch motor bracket and new plastic cam according to Parts List 35-1558-1, Page 10.

19. Install the new leaf switch cover (key38, Page 10) on the punch motor bracket using the top motor mounting screw to secure it.

20. Install the modified timer assembly. Connect the timer leads to TB1 as shown in the attached Figure 1. The white and black leads from the new ON-OFF toggle switch can be fed through a hole in the front plate directly behind the timer and

then brought around the side to TB1.

21. Reconnect all the telemetering leads between TB1 and TB2; dress the cables and secure the cable clamps as they were before the modification. CAUTION: Be sure that the telemetering leads and cable from the punch contacts are clear of moving parts.

22. Install the collector bucket, connect the battery, and make a preliminary zero adjustment.

23. Perform a calibration check and adjust, if necessary, as directed in the Maintenance Schedule for Fischer & Porter Precipitation Gages.

24. Install the new lower case assembly and the hood and return the gage to normal operation.

25. Paste or staple one of the three copies of Figure 1 over the Model 1548 Wiring Diagram (Figure 7) in Instruction Bulletin 35-1548 and add the following on the front cover of the bulletin:

THIS GAGE HAS BEEN MODIFIED TO MAKE
IT THE MECHANICAL AND ELECTRICAL
EQUIVALENT OF THE MODEL 1559 (A2)
PRECIPITATION GAGE

NOTE: If a manual (test) punch is made while the Ergas timer microswitch lever is on the low portion of the timercam (up to seven or eight minutes after a timed punchout), it is only necessary to depress the manual punch button for two or three seconds. The punch cycle will be completed automatically. However, if the timer microswitch lever is on the high part of the cam (after recock), it is necessary to keep the manual punch button depressed for most of the punch cycle (85%). The gage will then continue automatically through recock (the remaining 15% of the cycle). This is true of all types of Fischer & Porter punched tape gages except those equipped with Fischer & Porter solid state timers.

Since the indicator light (which served as a guide) has been removed, it may be difficult for an inexperienced technician or observer to complete a manual punch operation when the timer switch is in the recock position. It is recommended that all manual punch operations be performed with the timer switch lever in the low position. The timer cam can be moved clockwise to reach this position. The tape and timer cam will have to be reset to the correct time when the gage is returned to service.

Attachments: (3) Copies of Figure 1.

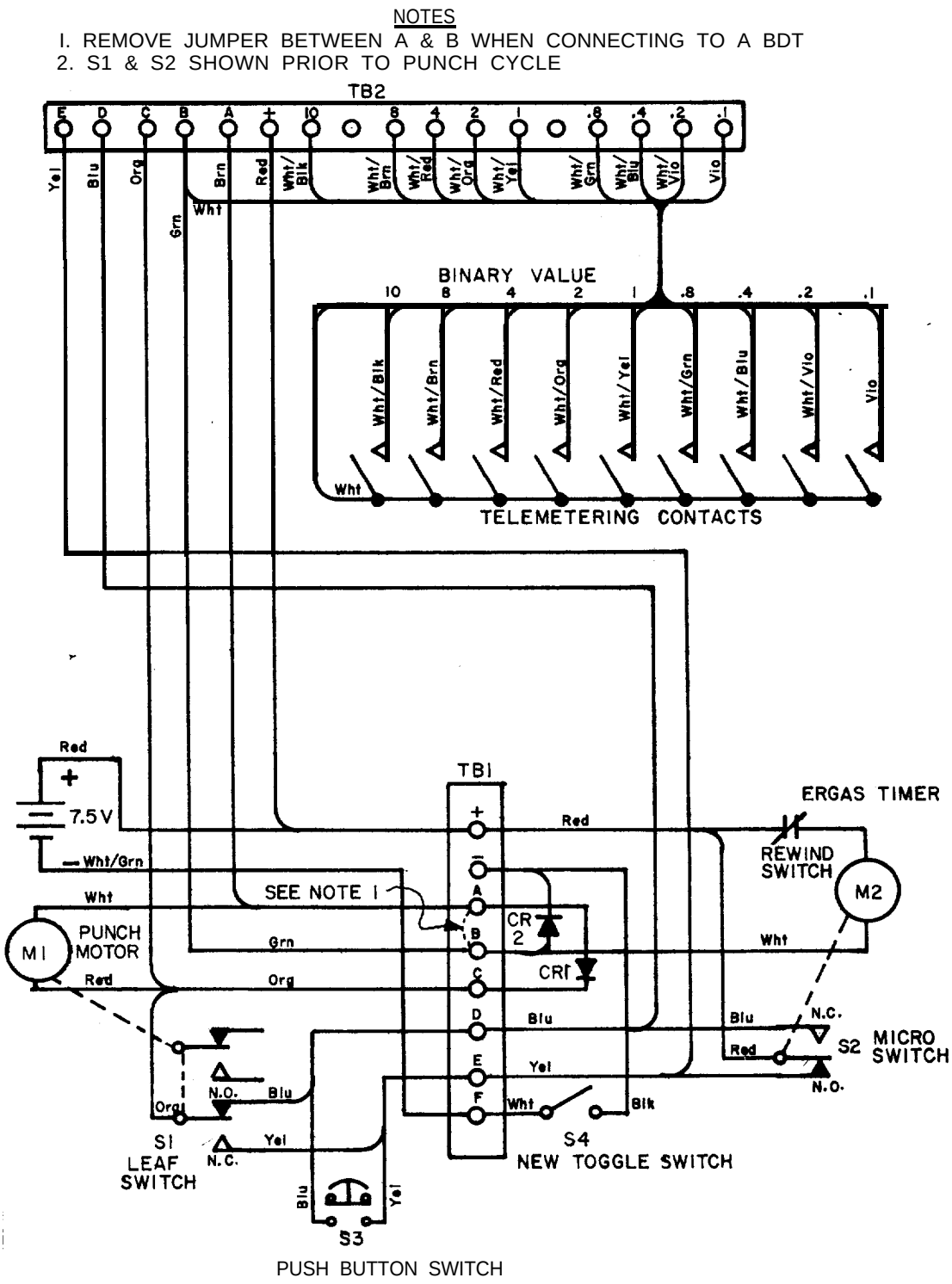

FIGURE 1

HYDROLOGIC GAGING MODIFICATION NO. 1

MODIFIED FISCHER 8 PORTER MODEL 1548 WIRING

NOTES

1. REMOVE JUMPER BETWEEN A & B WHEN CONNECTING TO A BDT.
2. S1 & S2 SHOWN PRIOR TO PUNCH CYCLE,

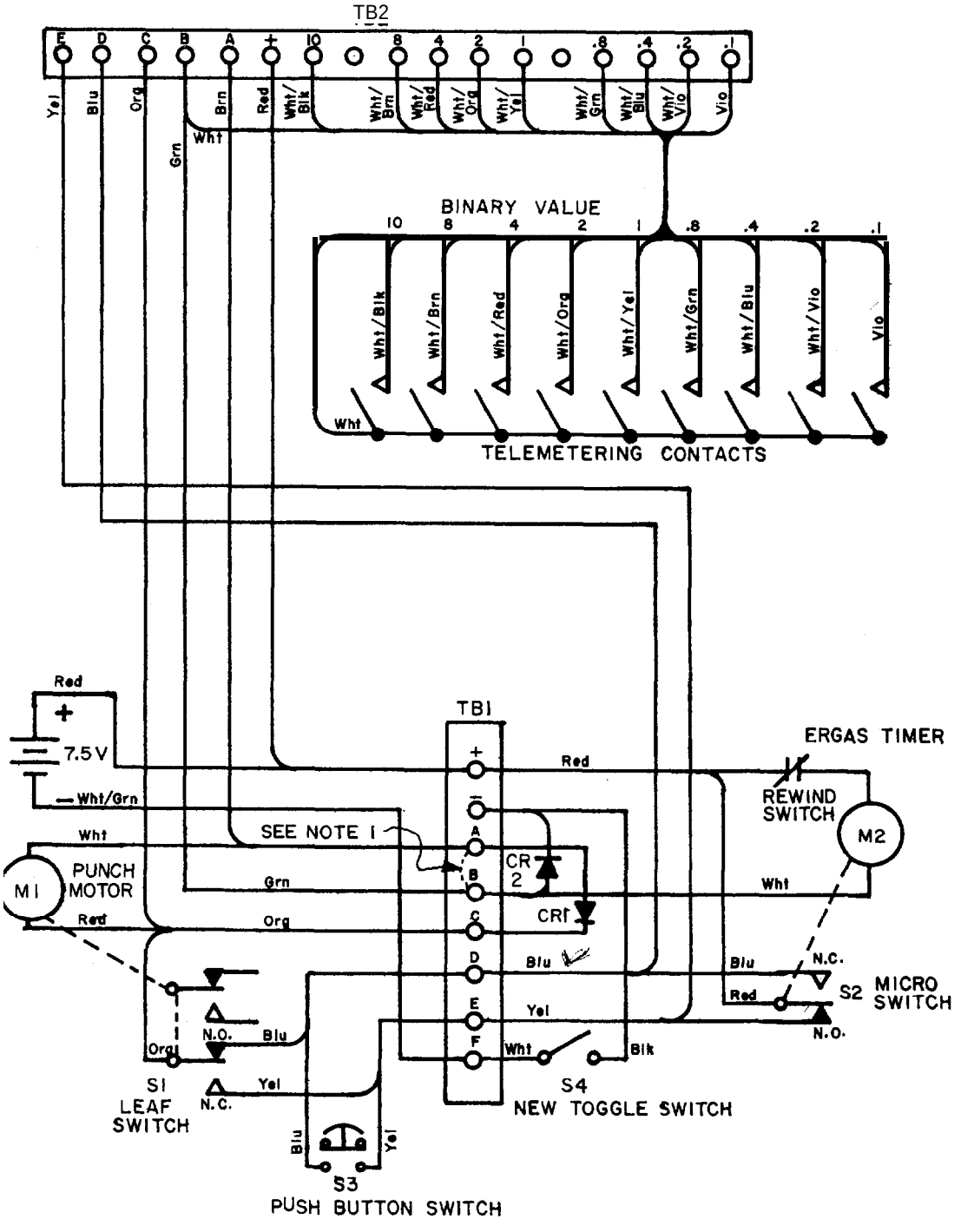

FIGURE 1

HYDROLOGIC GAGING MODIFICATION NO. I

MODIFIED FISCHER & PORTER MODEL 1548 WIRING

NOTES

I. REMOVE JUMPER BETWEEN A & B WHEN CONNECTING TO A BDT.

2. S1 & S2 SHOWN PRIOR TO PUNCH CYCLE,

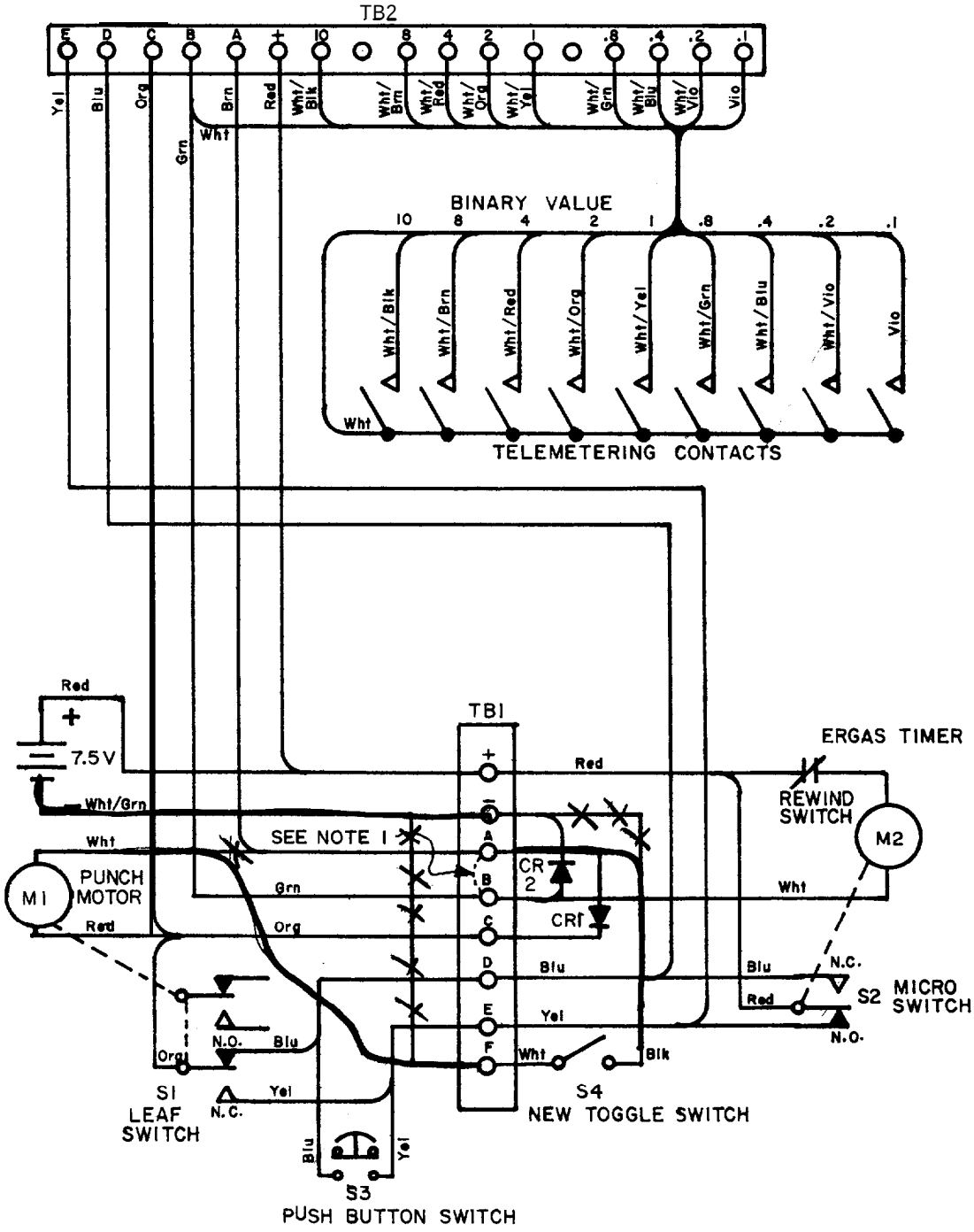

FIGURE 1

HYDROLOGIC GAGING MODIFICATION NO. I

MODIFIED FISCHER & PORTER MODEL 1548 WIRING

U.S. DEPARTMENT OF COMMERCE
National Oceanic and Atmospheric Administration
NATIONAL WEATHER SERVICE
Silver Spring, Md. 20910

Date: October 2, 1973

Reply to Attn of: W514

Subject: Transmittal Memorandum for Engineering Handbook No. 10, Issuance 73- 2

To: All Regional Headquarters, Area Electronic Supervisors, Electronics Technicians and Substation Network Specialists

1. Material Transmitted:

Engineering Handbook No. 10 - Hydrologic Equipment, Section 3.1; Hydrologic Gaging Modification No. 2, Updating of the Fischer & Porter Models 1558(A1) and 1559(A1) Precipitation Gages.

2. Summary:

Modification No. 2 provides instructions for performing modifications on the Fischer 8, Porter Models 1558(A1) and 1559(A1) Precipitation Gages which will make them the mechanical and electrical equivalents of the later Models 1558(A2) and 1559(A2) Gages.

3. Effect on Other Instructions:

Fischer & Porter Instruction Bulletin 35-1558 and Parts List -35-1558 associated with the unmodified gage should be discarded. Instruction Bulletin #35-1558-1 and Parts List #35B1558 provided with the parts kit should be used after the modification,

J. A. Cunningham
Chief, Engineering Division

HYDROLOGIC GAGING MODIFICATION NO. 2
(For Electronics Technicians and Substation Network Specialists)

SUBJECT : Updating of the Fischer & Porter Models 1558(A1) and 1559(A1) Precipitation Gages

PURPOSE : To make the Models 1558(A1) and 1559(A1) Gages Mechanical and Electrical Equivalents of the Models 1558(A2) and 1559(A2) Gages

EQUIPMENT AFFECTED : Fischer & Porter Models 1558(A1) and 1559(A1) Precipitation Gages

PARTS PROVIDED :
- 1 ea. Tape Guide, Fischer & Porter #661B006U01
- 2 ea. Screw, fillister head, #I0-32x3/8", F&P #004L006T10
- 2 ea. Lock washer, #10, F&P #085D010S31
- 1 ea. Snap Button Hole Plug for 3/4" hole
- 1 ea. Metal Jumper for Cinch #140 Terminal Strip
- 1 ea. Leaf Switch Cover, F&P #641B022U01
- 1 ea. Punch Motor Drive Cam (plastic) F&P #423A121U01
- 1 ea. Drive Motor Support Bracket, F&P #353A267
- 1 ea. Lower Pawl, F&P #400D038U01
- 1 ea. Instruction Bulletin, F&P #35-1558-1
- 1 ea. Parts List F&P #35B1558

This kit of parts for Hydrologic Gaging Modification No. 2, including the Instruction Bulletin #35-1558-1 and Parts List 3581558 is avai!able from the Central Logistics Supply Center as NSI. Order as follows:

Kit, Hydrologic Gaging Mod. No. 2 including F&P Instruction Bulletin 35-1558-1 and Parts List 35B1558.

TIME REQUIRED : 2 Man-hours

GENERAL--The Fischer & Porter Models 1558(A1) and 1559(A1) precipitation gages are the direct descendants of the Model 1548 precipitation gage and are the predecessors of the Models 1558(A2) and 1559(A2) gages. They possess some of the characteristics of the Model 1548 gage, but also have many of the improvements found in the A2 gages. For instance, the Al gages produce an "80" punch indication during a manual (test) punchout, and also have an indicator light which operates during this period, just as the Model 1548 gages have. The, tape supply spool assembly is also similar to that on the 1548 gages. On the other hand, the A1 gages have a large access door in the lower case assembly, which is identical with the large lower case door in the A2 gages. Also, the Model A1 terminal strip TB1 designations are almost identical with those on the corresponding A2 terminal strip.

The purpose of this modification is to eliminate the outdated Model 1548 characteristics and to bring the Al gages up to the level of the A2 gages electrically and mechanically. The modified Al gages will be equal to the Model 1558(A2), ac operated gage (Weather Service S/N D111A) or the Model 1559(A2), dc operated gage (Weather Service S/N D111B).

Updating of the Fischer & Porter Model 1548 precipitation gage (Hydrologic Gaging Modification No. 1) is intended to produce the same result for the 1548 gages. A limited number of kits for this modification will be available this fiscal year.

One of the goals of the gage modification program is to eliminate the stocking of obsolete replacement items,many of which are no longer being manufactured. The newer replacement parts are more efficient and improve the gage operation. Another goal is to simplify the electrical wiring so that the Fischer & Porter solid state timer can be easily substituted for the Ergas timer. This we hope to accomplish within the next two years.

The new 35B1559 precipitation gages, several hundred of which were purchased by the NWS last year, are mechanically and electrically similar to the A2 gages. The TB1 terminal board designations have been radically changed, however the internal wiring is the same. In these gages the "80" punch has been eliminated, and the tape guide spring (removed from the A2 gages in year 1968) has been reinstalled by the factory. These two features are part of this Al gage modification. Hydrologic Gaging Maintenance Notes 48 and 49 discuss these items. Except for the difference in TB1 terminal board markings the modified Al gages are the electrical and mechanical equivalents of the new B (3581559) gages.

This modification does not provide for replacing the tape feed sprocket assembly. If trouble is encountered with the sprocket, a replacement should be ordered from the Central Logistics Supply Center (WS S/N D550-A109), FSN 6660-936-8009, along

The four attached wiring diagrams supersede all Fischer & Porter precipitation gage wiring diagrams found in Hydrologic Gaging Mods. 1, 2, and 3, in the Hydrologic Gaging Maintenance Notes, and in all Fischer & Porter Instruction Manuals. An exception is for unconverted Ergas timer gages which still require their own appropriate diagrams and manuals.

Operating and servicing information is similar in all gage instruction manuals, however, in the near future only the A2 manual (Instruction Bulletin 35-1558-1) and the B and C type gage manual (Instruction Bulletin 35B1558) will be retained for issue at CLSC. The latest parts list (Parts List 35B1558) will be the only one available at CLSC.

The attached Modification Completion Report will be prepared and routed to the NWS Engineering Division (W511) as indicated on the report. If the el tech or SNS is to modify two or more gages, he will make enough copies of the report to provide one for each gage modified.

The attached "Standardized Gage Connections" is provided to aid the technician in performing the modification.

Attachments: 1 each of Standardized Gage Connections
1 each of Figure 1
Figure 2
Figure 3
Figure 4
2 each of Modification Completion Report

STANDARDIZED GAGE CONNECTIONS

1. Modified Model 1548 with Solid State Timer (Figure 1)

TB1-(+)	Red jumper to TB1-E, also one lead of S-3 (Manual Punch).
TB-(-)	Black lead to solid state timer (3) and battery (-), also green lead to TB2-B. BDT jumper between (-) and A transferred to TB2-B and A to reduce number of connections at TB1.
TB1-A	White punch motor lead, one lead of S-Z (Power), and anode lead of diode.
TB1-B	Red punch motor lead, yellow lead to solid state timer (#2), jumper from B to C, and other lead to S-3 (Manual Punch).
TB1-C	Orange lead to S1 (leaf or microswitch), orange lead to TB2-C, jumper to B, and cathode of diode.
TB1-D	Yellow lead to S1 (leaf or microswitch), and yellow lead to TB2-D.
TB1-E	Red jumper to TB1-(+), red lead to solid state timer (1) and battery (+), red lead to TB2-E, blue lead to S1 (leaf or microswitch).
TB1-F	Brown lead from TB2-A, and other lead from S-2 (Power).

2. A2 Gage and Modified Al Gage with Solid State Timer (Figure 2)

TB1-(+)	Red jumper to TB1-E, and one lead of S-3 (Manual Punch).
TB1-(-)	Black lead to solid state timer (3) and battery (-), also white/green lead to TB2-(-). BDT jumper between (-) and A transferred to TB2-(-) and TB2-A to reduce number of connections at TB1.
TB1-A	White punch motor lead, one lead of S-2 (Power), and anode lead of diode.
TB1-B	Red punch motor lead, yellow lead to solid state timer (#2), jumper from B to C, and other lead to S3 (Manual Punch).

TB1-C Orange lead to S1 (leaf or microswitch), orange lead to TB2-C, jumper to B, and cathode of diode.

TB1-D Yellow lead to S1 (leaf or microswitch), and yellow lead to TB2-D.

TB1-E Red jumper to TB1-(+), red lead to solid state timer (1) and battery (+), red lead to TB2-E, and blue lead to S1 (leaf or microswitch).

TB1-F White lead from TB2-A, and other lead from S-2 (Power).

3. F&P Type B and C Gage (35B1559) (Figure 3).

TB1-4 Nothing.

TB1-2 Yellow lead to solid state timer (2), one lead to S-3 (Manual Punch), jumper from 2 to (+), one lead to S-2 (Power).

TB1-R1 Yellow lead to TB29, yellow lead to S1 (leaf or microswitch).

TB1-5 Red motor lead, cathode of diode, other lead to S-2 (Power).

TB1-(+) Orange lead to TB2-8, orange lead to S-1 (leaf or microswitch) jumper from (+) to 2.

TB1-B Other lead of S-3 (Manual Punch), jumper from B to 1, and blue lead to S1 (leaf or microswitch).

TB1-1 Jumper from 1 to B, red lead to solid state timer (1) and battery (+), and red lead to TB2-10.

TB1-A White lead to TB2-7, white punch motor lead, and anode of diode.

TB1-3 Black or white/green lead to solid state timer (3) and battery (-). White/green lead to TB2-6. Note that BDT jumper between 3 and A is transferred to TB2-6 and 7 for purpose of standardization.

4. Series 1558 (AC) Gage (Figure 4)

TBI-(+) + Lead to printed circuit board, red lead to S2 (Timer Microswitch), one lead of S3 (Manual Punch), red lead to TB2-(+).

TB1-(-) - Lead to printed circuit board, white/green lead to TB2-(-).

TB1-A Anode lead of diode, white lead to punch motor, white lead to TB2-A. (Note jumper betweem TB-2-(-) and A).

TB1-B Other lead to S3 (Manual Punch), and jumper from B to C.

TB1-C Orange lead to S1 (leaf or microswitch), orange lead to TB2-C, red lead to punch motor, and cathode lead of diode.

TB1-D Yellow lead to S2 (timer microswitch), yellow lead to S1 (leaf or microswitch), and yellow lead to TB2-D.

TB1-E Blue lead to S2 (timer microswitch), blue lead to S1 (leaf or microswitch), and blue lead to TB2-E.

TB1-3 Hot AC lead (black) to printed circuit board, black lead to timer motor, black lead to fuse and power switch.

TB1-L2 Neutral (white) AC lead to printed circuit board, white lead to timer motor, white lead to AC plug.

TB1-L1 Hot (black) lead to power switch, black lead to AC plug.

Gnd Stud Green lead from AC plug (external ground).

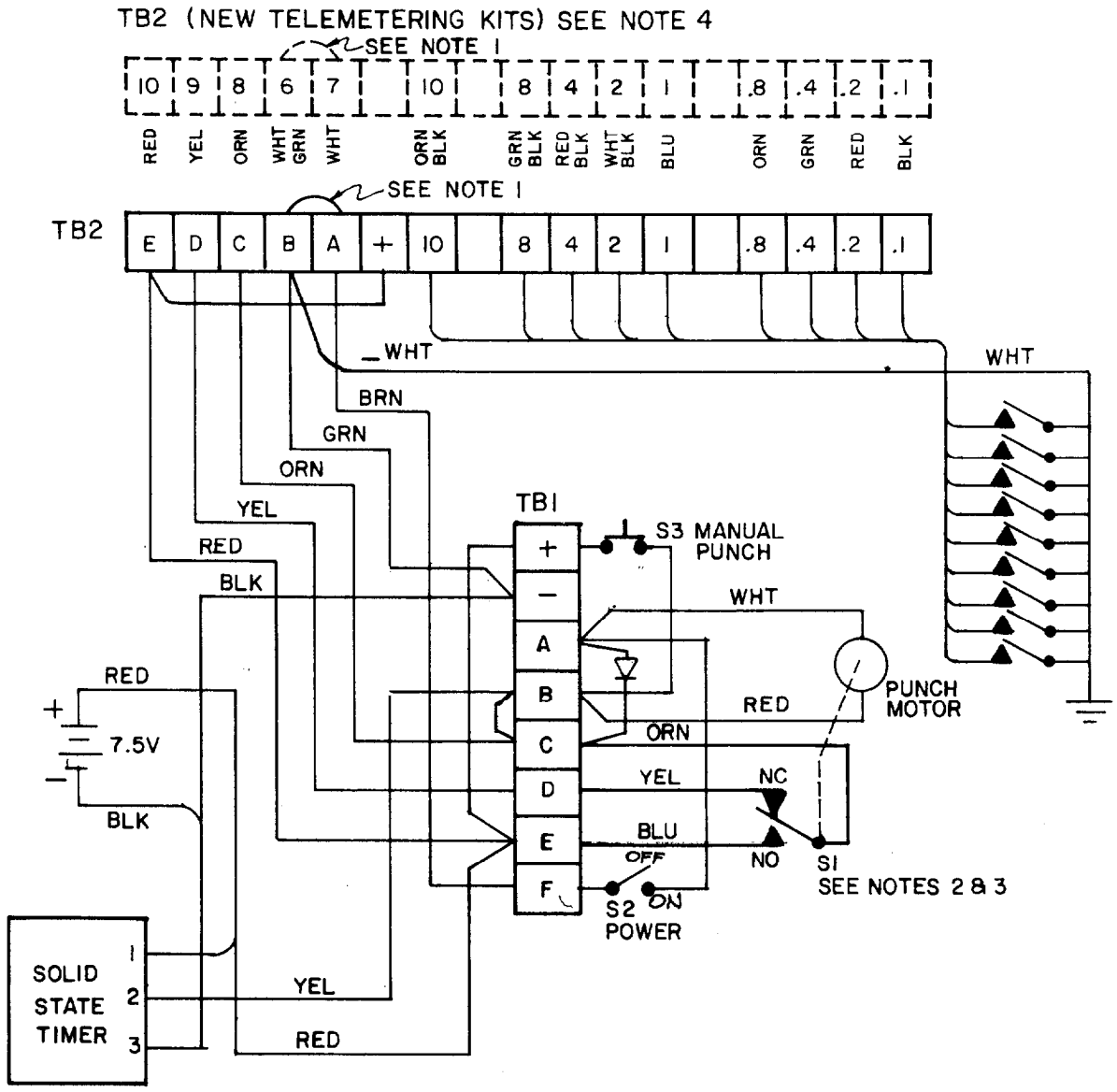

NOTES

1. REMOVE JUMPER WHEN BDT IS USED,
2. S1 SHOWN AT END OF PUNCH CYCLE.
3. S1 CAN BE EITHER OLD TYPE LEAF SWITCH (ONLY I SECTION USED) OR NEW D111-A151A MICROSWITCH AND BRACKET ASSEMBLY. COLOR CODE OF LEADS IS THE SAME.
4. IF NEW TELEMETERING KIT (D111-MS901) IS INSTALLED USE TB2 (DOTTED LINES) TB2 - 6&7 SHOWN REVERSED TO AGREE WITH OLD TB2-B&A.

FIGURE-1

MODIFIED F&P MODEL 1548 GAUGE WITH SOLID STATE TIMER

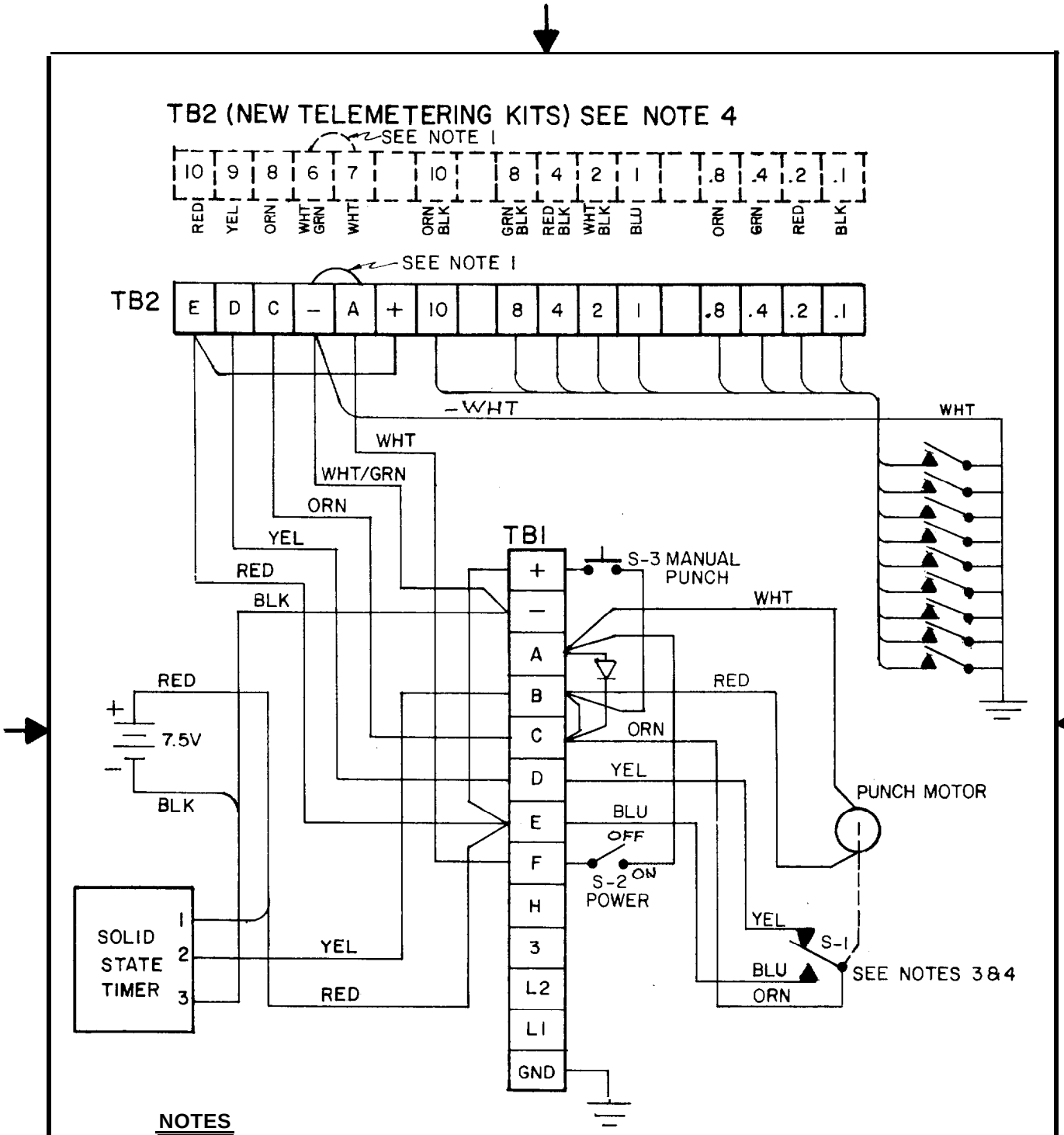

NOTES

1. REMOVE JUMPER WHEN BDT IS USED.
2. S1 SHOWN AT END OF PUNCH CYCLE.
3. St CAN BE EITHER OLD TYPE LEAF SWITCH (ONLY I SECTION USED) OR NEW D111-A151A MICROSWITCH AND BRACKET ASSEMBLY. COLOR COD E OF LEADS IS THE SAME.
4. IF NEW TELEMETERING KIT (D111-MS9OI) IS INSTALLED USE TB2 (DOTTED LINES TB2 - 6&7 SHOWN REVERSED TO AGREE WITH OLD TB2- (-) & A.

FIGURE-2

F & P A2 GAGE AND MODIFIED 1559 AI GAGE WITH S.S.TIMER

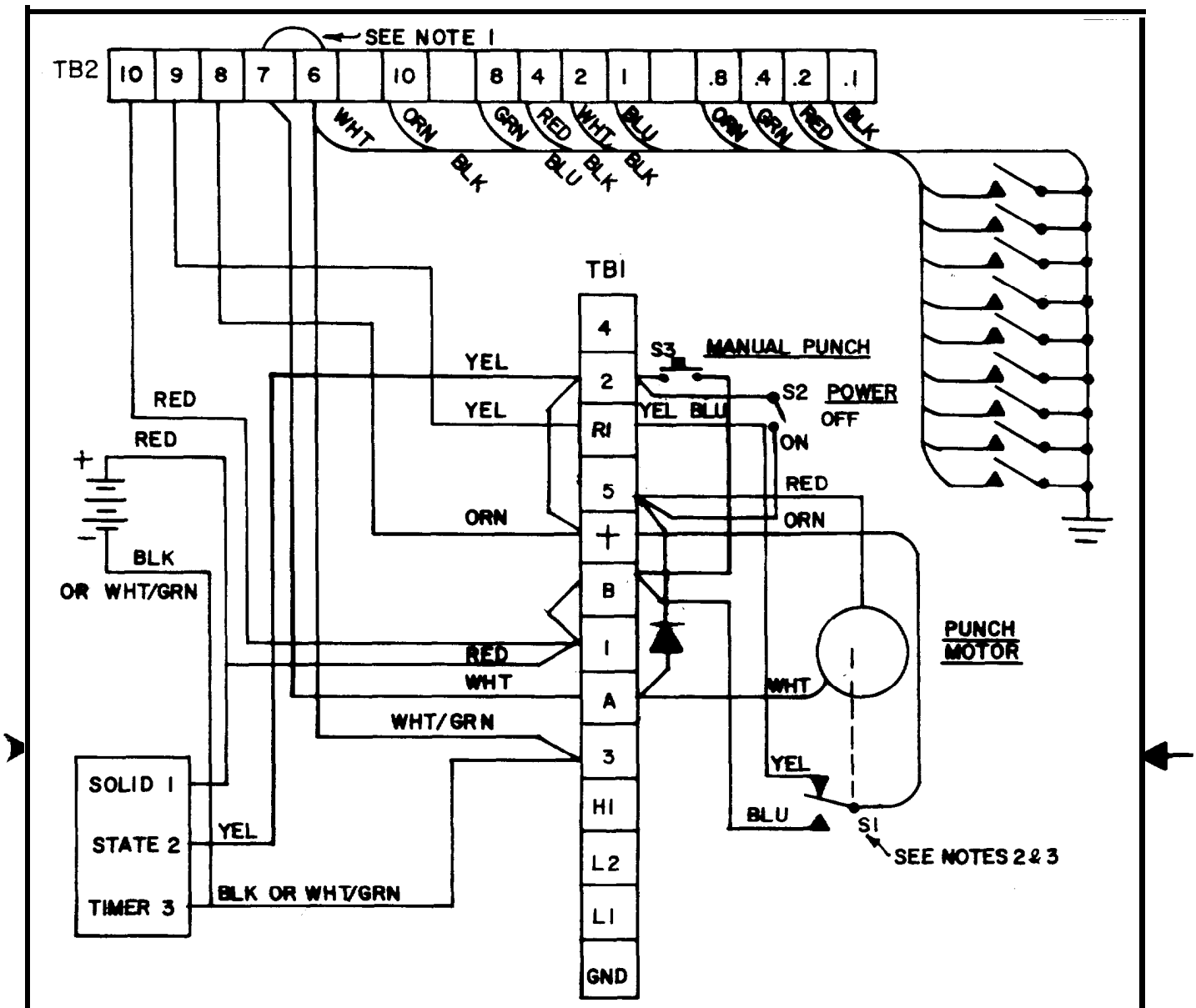

NOTES

1. REMOVE JUMPER WHEN BDT IS USED.
2. S1 SHOWN AT END Of PUNCH CYCLE.
3. S1 CAN BE EITHER OLD TYPE LEAF SWITCH (ONLY I SECTION USED) OR NEW D111-A151A MICROSWITCH AND BRACKET ASSEMBLY. COLOR CODE OF LEADS IS THE SAME

FIGURE - 3

F&P B TYPE GAGE (35BI559)

REVISED 3/25/77

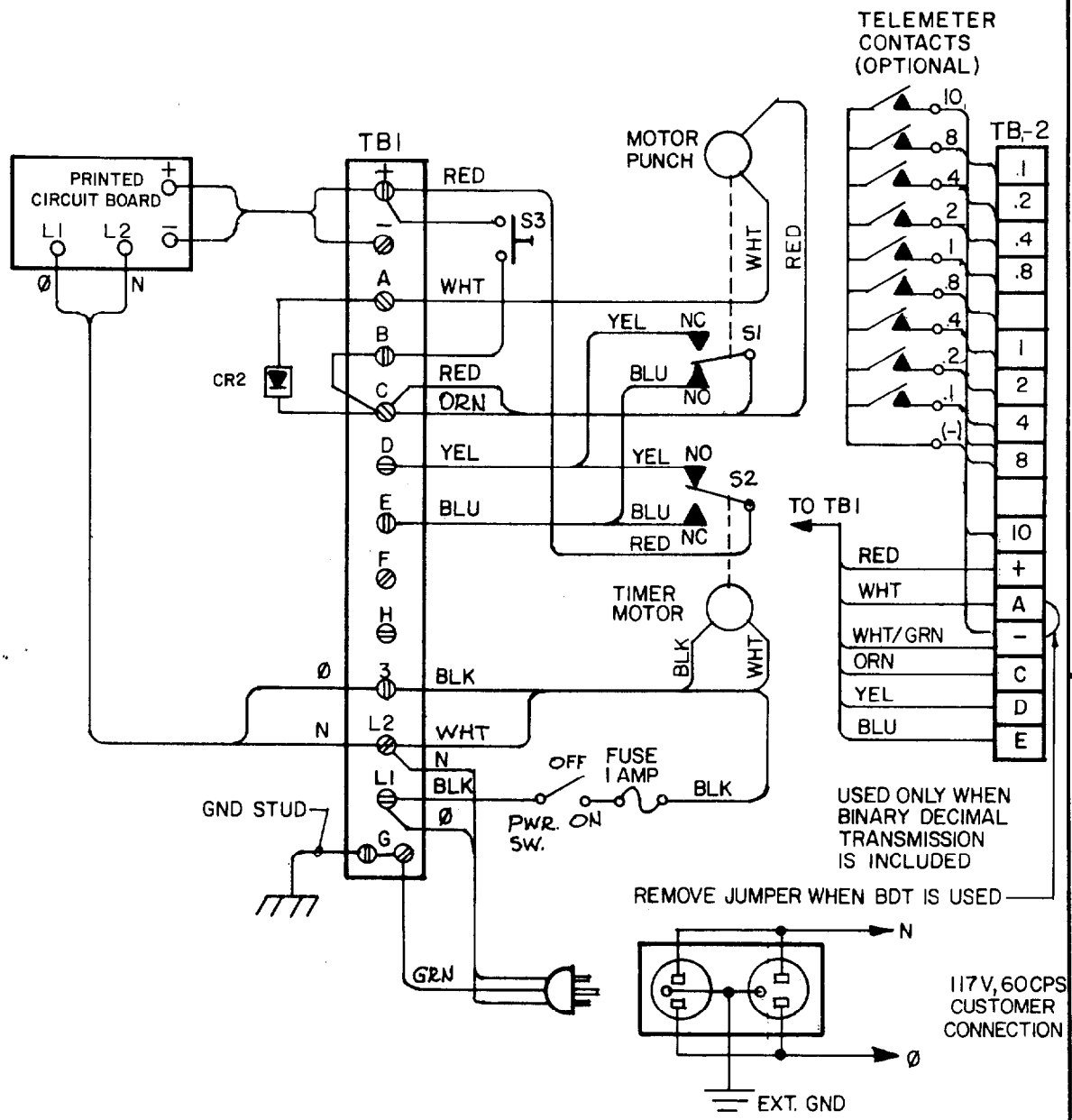

NOTES:

1. **S1 & S2 SHOWN PRIOR TO PUNCH CYCLE.**
2. **S2 OPERATED ON RAISED PORTION OF TIMER CAM.**
3. **DESIGNATIONS NO & NO REFER TO SHELF POSITION OF SWITCH.**

FIGURE 4 WIRING DIAGRAM; SERIES 1558 (AC)

U.S. DEPARTMENT OF COMMERCE
National Oceanic and Atmospheric Administration
NATIONAL WEATHER SERVICE
Silver Spring, Md. 20910

December 30, 1976

W514

TO: All Regional Headquarters, Electronic Program Officers, Electronics Technicians and Substation Network Specialists

FROM: J. M. St. Clair
Chief, Engineering Division

SUBJECT: Transmittal Memorandum for Engineering Handbook No, 10, Issuance 76- 8

1. Material Transmitted:

Engineering Handbook No. 10 - Hydrologic Equipment, Section 3.1; Hydrologic Gaging Modification No. 4, Standardization of Fischer & Porter Precipitation Gage Wiring.

2. Summary:

Modification No. 4 provides wiring diagrams and instructions which will enable all the older modified precipitation gages with solid state timers to be wired in a uniform manner. Discrepancies in on-off switch operation are also cleared by the modification.

3. Effect on Other Instructions:

Figures 1, 2, 3, and 4 of this modification supersede all other wiring diagrams of Fischer & Porter precipitation gages in Hydrologic Maintenance Notes, Modifications, and in Fischer & Porter precipitation instruction bulletins. Only the wiring diagrams are superseded; all other information remains in effect.

EHB-10
Issuance 76-8

HYDROLOGIC GAGING MODIFICATION NO. 4
(For Electronics Technicians and Substation Network Specialists)

SUBJECT : Standardization of Fischer & Porter Precipitation Gage Wiring

PURPOSE : Eliminate Gage Wiring Confusion

EQUIPMENT AFFECTED: All Fischer & Porter Precipitation Gages with Solid State Timers

PARTS REQUIRED : None.

TIME REQUIRED : 1 Man-hour

GENERAL .--Since Hydrologic Gaging Modification No. 3 (Mark IV Solid State Timer Installation) was issued, two problems concerning A1 & A2 gage electrical operation became evident. One problem, failure of the on-off switch to perform its function, was found to be due to bypassing of the battery negative return through the telemetering contacts and the grounded case of the solid state timer. A similar problem appears in the newer 35B1559 (B and C type) gages that have not been modified. The diagrams in the attached Figures 1, 2, and 3 show wiring changes which eliminate this trouble.

The other problem concerns routing of the negative return lead through telemetering equipment and back to the gage battery. The discrepancy is caused by negative lead color code changes in the different models of the older gages and changes in the wiring diagrams of the various Fischer & Porter gage instruction bulletins. An incorrectly wired negative lead causes no problems with the gage itself or with a DARDC responder; however, if a BDT is connected, an important interlock function may be lost.

Color coding of all the positive (+) leads has been standardized by Fischer & Porter on all gages. Telemetering color coding has in the past been variable but is now standardized on all B and C type gages, also on D111-MS901 telkits, and on D111-A161 printed circuit assemblies available from CLSC. This color coding appears on Figure 3. Earlier gages will become standardized in the course of normal maintenance as the telemetering printed circuits are replaced. Incidentally, it is more practical to replace old circuit boards if the contacts or their soldered connections become loose. Sometimes they can be repaired by resoldering but they will be likely to fail soon after, causing an emergency trip to be made.

This modification presents wiring diagrams and procedures which will bring all converted or updated Model 1548, 1559 (A1) and (A2) gages equipped with solid state timers into one standard electrical configuration. Gages equipped with Ergas timers are not included in this concept. It is hoped that in a short time sufficient electronic (solid state) timers will be available to eliminate all Ergas units.

All Model 35B1559 gages (B and C types) purchased during the last 5 or 6 years have solid state timers and do not require conversion. However, the problem of inadequate on-off switch control for our needs is still present. The Weather Service technician wants the power switch to be able to stop punch action immediately after punchout to check telemetering contacts. The existing wiring on the B and C type gages will control the gage at the start of punchout but 2 seconds later it has no effect and the gage will go through its full cycle. The wiring changes on Figure 3 will correct this deficiency.

Although the B and C type gages are the same as the updated 1548, 1559 (Al) and (AZ) gages mechanically and electrically, the Fischer & Porter Company saw fit to change the terminal board designations. Figure 3 shows the standardized electrical configuration for these gages. After this modification is performed, all DC gages with solid state timers should conform electrically to one of the three attached wiring diagrams.

Three different electronic timers are, or soon will be, available for use with Fischer & Porter precipitation gages. They are: (1) The Fischer & Porter Mark IV Solid State Timer, (2) the Fischer & Porter Mark III Solid State Timer, and (3) the Leupold & Stevens Solid State Timer. Although the timers are different in construction, their manner of operation and their wiring color coding are similar with respect to the gage.

Fischer & Porter AC gages of the Al and A2 types have the on-off power switch in the AC circuit and do not have the punch motor control problem. Do not change this wiring. However, for the purpose of standardization, the negative telemetering leads should be transposed; that is, the white/green lead should be on TB-1(-) and TB-2(-), and the white lead should be on TB1-A and TB2-A. Since the on-off switch is not in this circuit, there is no need to run the white lead to TB1-F, as shown in Figure 2. AC gage wiring is shown on Figure 4.

There is no special procedure required for this modification since only wiring changes are involved. If a lead is found to be too short, it is suggested that it be cut, and an additional length of hookup wire of the same color spliced in. The splices should be neatly soldered and taped. Be very careful and add all jumpers as required to make the gage look like the appropriate drawing. The jumpers are very small and can be easily overlooked in the terminal lead pile-up.

with two sprocket spring retainers (WS S/N D550-MP119, FSN 5340-470-1219.) Two flat teflon washers should also be ordered (WS S/N D550-H1O1, FSN 5330-900-1577.)

The replacement sprocket is made of stainless steel, and will eliminate problems caused by chipping of the teeth.Detailed instructions for installing the sprocket are found in Steps 10 and 11 of Hydrologic Gaging Modification No. 1, Updating of the Fischer & Porter Model 1548 Precipitation Gage, dated April 28, 1971.

The attached "Modification Completion Report" will be prepared and routed to the NWS Engineering Division (W511) as indicated on the report. If the technician is to modify two or more gages he will make enough copies of the report to provide one for each gage modified.

The following Fischer & Porter manuals should be on hand for reference during the modification:

IB35-1558	Instruction Bulletin for Series 1558 & 1559 Precipitation Gage-Recorder (A1 Recorder)
Parts List 35-l558	Parts List for Series 1558 & 1559 Precipitation Gage-Recorder (A1 Recorder)
Instruction Bulletin 35-9009	Maintenance Bulletin for Series 35-l548, 35-l558 and 35-1559 Precipitation Gage Recorders
Instruction Bulletin 35-1558-1 and Parts List 3581558	For the 1558 and 1559 Design Sequence A2 Recorder can also be used for reference. AFTER the 'modification is completed these manuals apply to the gage. NOTE: The 35B1558 Parts List applies to both A2 and B type gages.

PROCEDURE. -- (Applies to both 1558 and 1559 Gages.)

1 . Remove the hood, collector bucket, and lower case assembly. Remove the paper tape and chad tray.

2. Disconnect the battery or power supply.

3. Disconnect the external wiring from terminal board TB1 and remove the timer bracket assembly, key #31, Page 7, Parts List 35-l558.

4. Remove and discard the punch support assembly, key #32, #33, and #34,Page 7, Parts List 35-1558. This eliminates the "80" punch feature. Do not remove key #41 block assembly which punches the translator feed hole. NOTE: The knob assembly on the manual punch switch on the timer panel should be retained since its larger surface aids in operating the pushbutton switch. If this switch is to be replaced in the future,order the D111B-S170 (D550-S1O1) switch, This switch is much easier to operate and the knob assembly can be discarded at that time.

5. Remove and discard diode CR3 (Page 8 -Instruction Bulletin 35-l 558) from the rear of terminals B and C of TB1 by clipping the leads.

6. Remove and discard resistor R3 from the rear of TB1-B and -H. In Figure X (DC drawing) this resistor is R1.

7. Remove the gray and red indicator lamp leads from the rear of TB1-F and -H. These leads are laced together with other leads and may be difficult to remove completely.. It is suggested that they be cut back as far as possible at terminals F and H, and again cut off and taped at the top of the cable where they branch off to the indicator lamp assembly DS1.

8. Remove and discard the indicator lamp assembly DS1 and cover the hole with the 3/4" snap button provided. It may be necessary to carefully spread the fingers of the button so that it will fit properly.

9. Connect the metal jumper provided between TB1 terminals B and C.

10. Remove the gray lead and the white/green lead from the upper section of the punch motor leaf switch assembly and from TB1-F and -A. Clip these leads at the switch terminals and pull them through the spaghetti tubing of the cable assembly. The only leads left in the cable assembly should be the orange, yellow, and blue leads connected to TB1-C, -D, and -E, respectively. This completes the electrical portion of this modification. The gage wiring should now be as in Figures 1 or 2 (attached) depending on the type of gage. These figures are identical to Figures 9 and 10 in the Fischer & Porter Instruction Bulletin 35-l 558-l for the 1558 and 1559 Design Sequence A2, except for a transposition of terminals TB1-1 and -3 with terminals TB1-3 and -L1. This does not affect gage operation. S1 and S2 armature positions are changed from those in IB-1558-1 to indicate their correct positions after recock, or before punchout. These positions ore shown incorrectly in the Fischer & Porter instruction.

U.S. DEPARTMENT OF COMMERCE
National Oceanic and Atmospheric Administration
NATIONAL WEATHER SERVICE

April 28, 1977

W514

TO: All Regional Headquarters, Electronic Program Officers, Electronics Technicians, and Station Network Specialists

FROM: J.M.St.Clair
for Chief Engineering Division

SUBJECT: Transmittal Memorandum for Revised Pages of Engineering Handbook No. 10, issuance 76-8, dated 12-30-76.

1. Material Transmitted:

Revised copy of Page 5, Page 6, and revised Figure 3 of EHB-I0, Issuance 76-8, Hydrologic Gaging Modification No. 4, Standardization of Fischer & Porter Precipitation Gage Wiring, dated 12-30-76.

2. Summary:

Page 5 and its related Figure 3 contain an error which results in continuous precipitation gage punch operation. The revised Page 5 and Figure 3 provide the correct wiring for normal operation.

3. Effect on Other Instructions:

Substitute the attached revised Page 5, Page 6, and revised Figure 3 for their original counterparts in Hydrologic Gaging Modification No. 4, and destroy the originals. No other instructions are affected.

Revised pages inserted. TWO

11. Remove the complete punch motor assembly, key #49, Page 7 of Parts List 35-1558, from the gage,

12. Remove the metal motor switch cam assembly, key #19, Page 11 of Parts List 35-1558, from the programming shaft and replace it with the plastic cam provided. The cam can go on the shaft two ways, one 180° out from the other. Be sure that its position is approximately the same as that of the punch arm actuating cam (key #7) on the programming shaft.

13. Remove the punch motor, leaf switch, and cable clamp from the punch motor bracket, and replace the bracket with the one provided. Discard the old bracket and the cam assembly replaced in Step 12.

14. Reassemble the punch motor, motor switch, and cable clamp on the new bracket and reinstall the assembly on the gage. (Refer to Page 11 of Parts List 35-l558). When installing the switch on the bracket, reverse the positions of the bar nut (key #20) and the bar washer (key #23) from those shown on Page 11. This will facilitate adjustment of the switch. Refer to Maintenance Bulletin 35-9009 (EHB10-206) Page 20, Section J, for motor switch adjustment hints. NOTE: In Section J, Step 5a, shut off power after switch falls into the cam valley. Reapply power in Step 5b.

15. Remove and discard the lower feed pawl, key #10, Page 11 of Parts List 35-1558, and replace it with the new pawl provided. Adjust it according to the instructions in Maintenance Bulletin 35-9009, Pages 10 and 11.

16. Install the new leaf switch cover provided on the punch motor bracket. Use the top motor mounting screw to secure it.

17. Remove and discard the upper section of the tape bracket, key #3, Page 3, Parts List 35-l558, and also the spring (key #4). The lower section of the bracket (key #7) can be squeezed slightly to grip the tape spool (key #2) so that it will not easily come off the lower bracket. The paper tape will turn freely on the spool. Note the relative position of the paper tape (key #1) on the spool. This arrangement provides the same features as the A2 gage spool assembly discussed in Hydrologic Gaging Maintenance Note #48.

18, The tape guide spring provided is fastened to the mounting plate (front plate) using two existing holes located adjacent to the punch arm bearing block mounting holes. (See Page 13 of Parts List 35-l 558.) Each hole is one inch away to the outside from its adjacent bearing block hole. Tap the holes with a #10-32

tap and use the 10-32 x 3/8" screws and lock washers provided to secure the tape guide. The holes do not require additional drilling before tapping. On telemetering models the right hole (viewed from the front) may be used to secure a cable harness clamp. Remove the clamp, tap the hole, then secure the tape guide and the cable harness with the 10-32 x 3/8" screws and lock washers. The Parts List for the B Gage (Fischer & Porter Parts List 3581558) on Page 10 shows the tape guide (key #37) in its proper position with reference to the other gage parts. Figure 3 is a drawing showing the correct method for threading the paper tape through the tape guide in A2 gages. The same method applies to the modified A1 gages.

This completes the modification of the A1 type precipitation gage to make it the equivalent of the type A2 gage. Installation and operation instructions are about the same except for the manual (TEST) readout. Since there is now no indicator light, the manual switch button must be held down until the punchout is started. Another method is to slowly rotate the Ergas timer cam clockwise past the recock cycle until punchout occurs. This method involves resetting the timer cam, however, when the gage is returned to service. Fischer & Porter Instruction Bulletin 35-1558-1 (EHB10-204), and Parts List 3581558 (EHB10-205) should be used when servicing the modified A1 gage. The Instruction Bulletin 35-1558, and Parts List 35-1558 are no longer applicable and should be discarded.

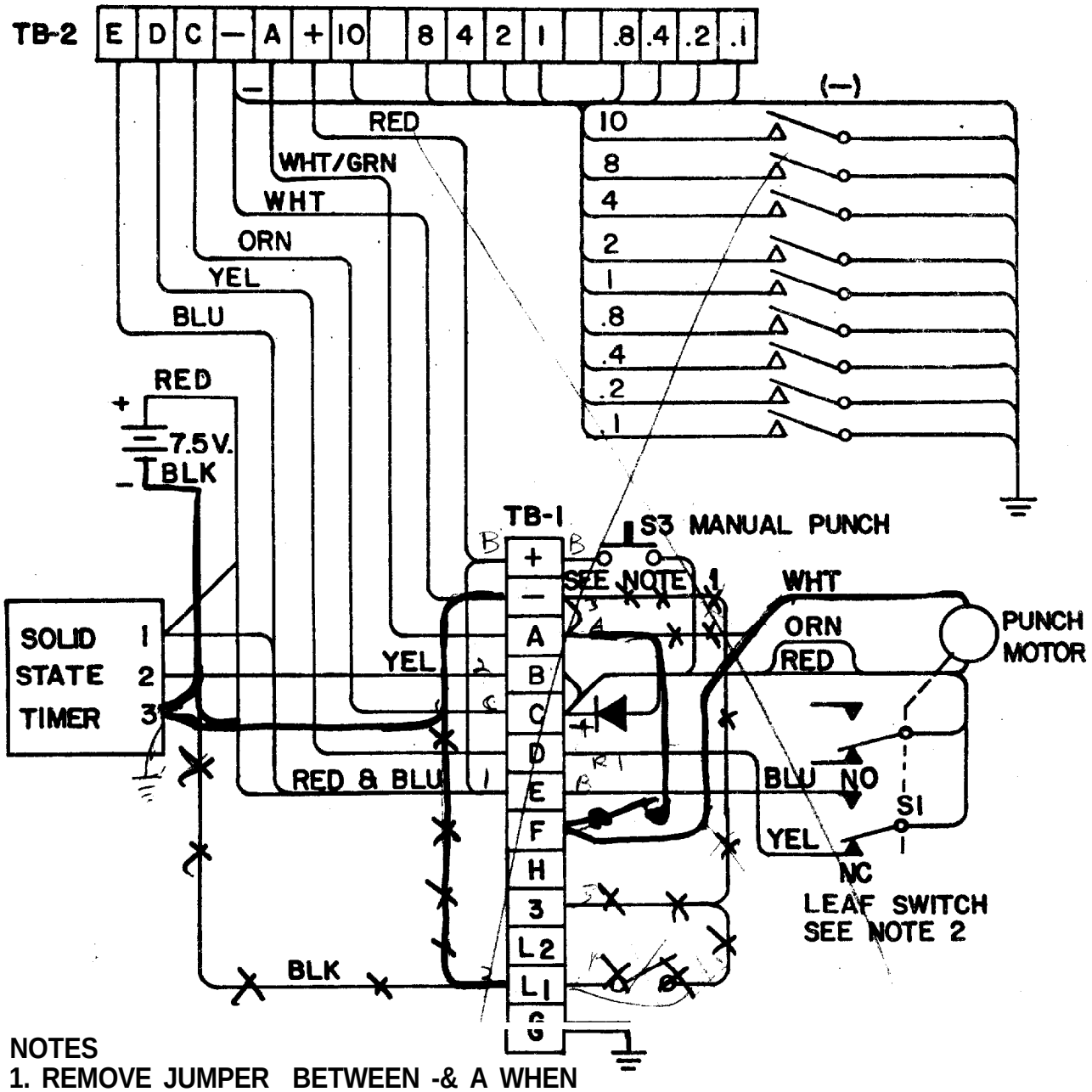

NOTES
1. REMOVE JUMPER BETWEEN -& A WHEN BDT IS USED.
2. S1 SHOWN AT END OF PUNCH CYCLE.

UPDATED F & P MODEL 1559(A1) GAGE WITH SOLID STATE TIMER

FIGURE 3

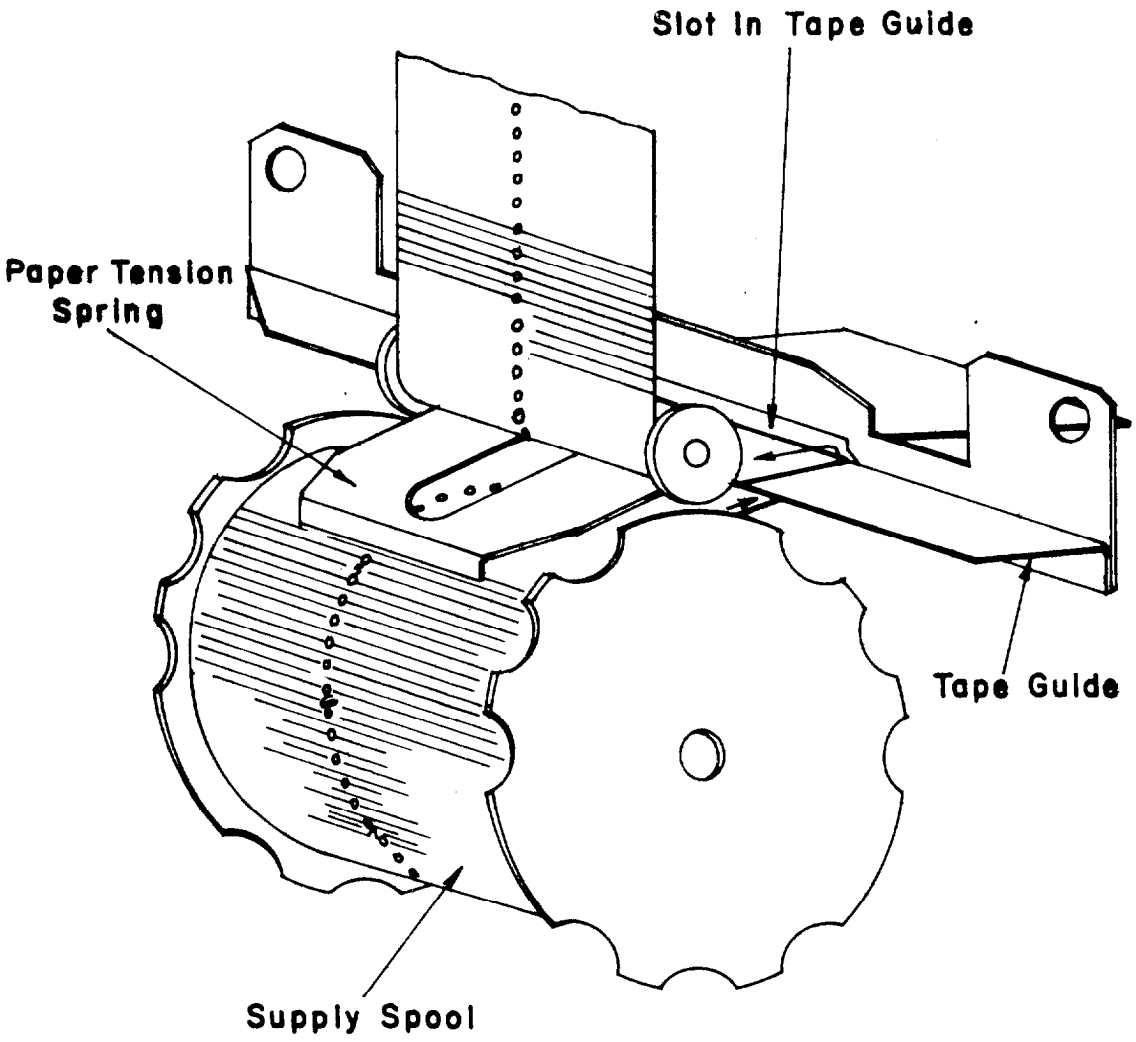

FIGURE-3

Fischer-Porter Models 1558 & 1559 Design Sequence A2 Tape Feeding Diagram.

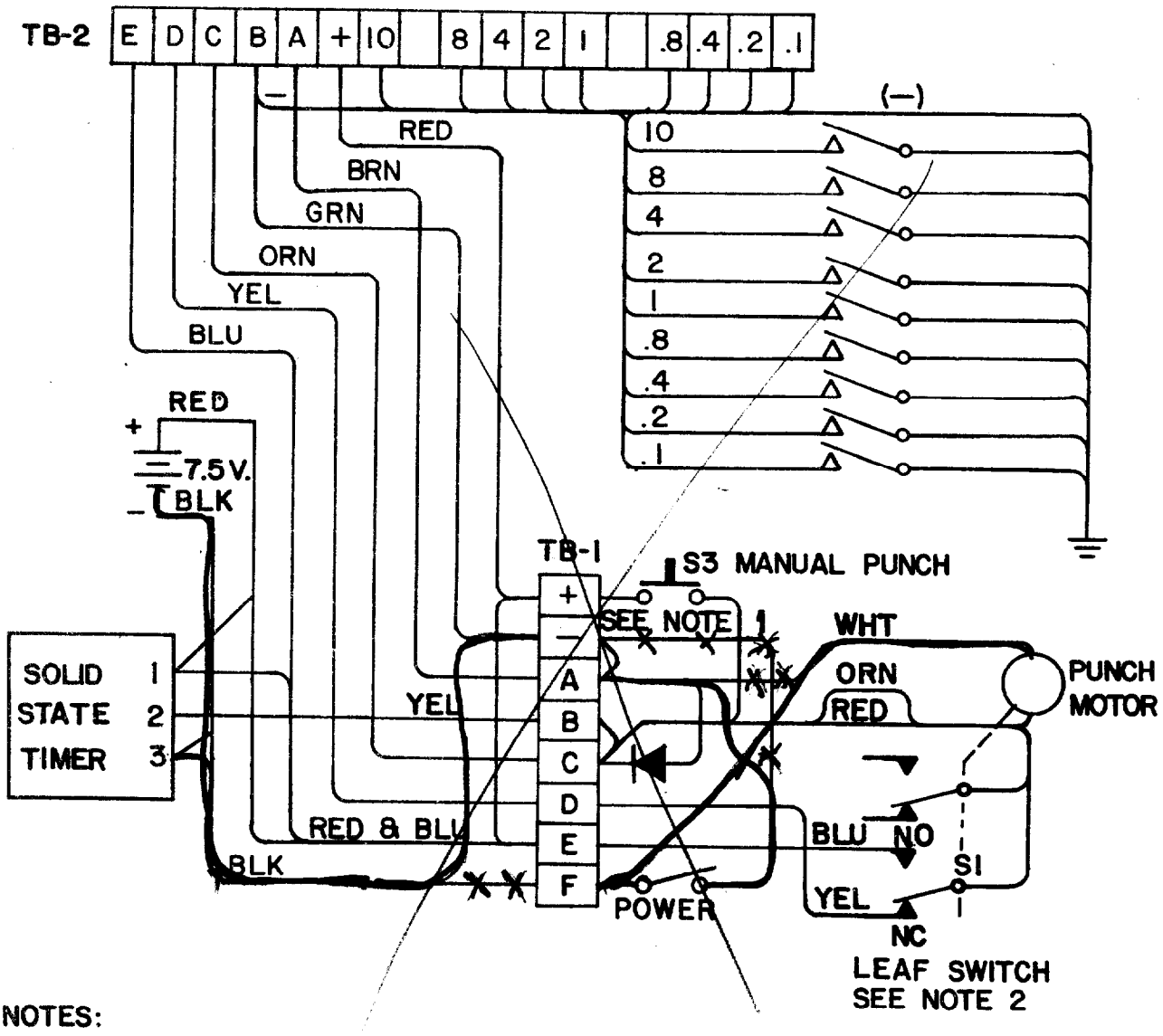

NOTES:

1. REMOVE JUMPER BETWEEN — & A WHEN BDT IS USED.
2. S1 SHOWN AT END OF PUNCH CYCLE.

MODIFIED F & P MODEL 1548 GAGE WITH SOLID STATE TIMER

FIGURE 2

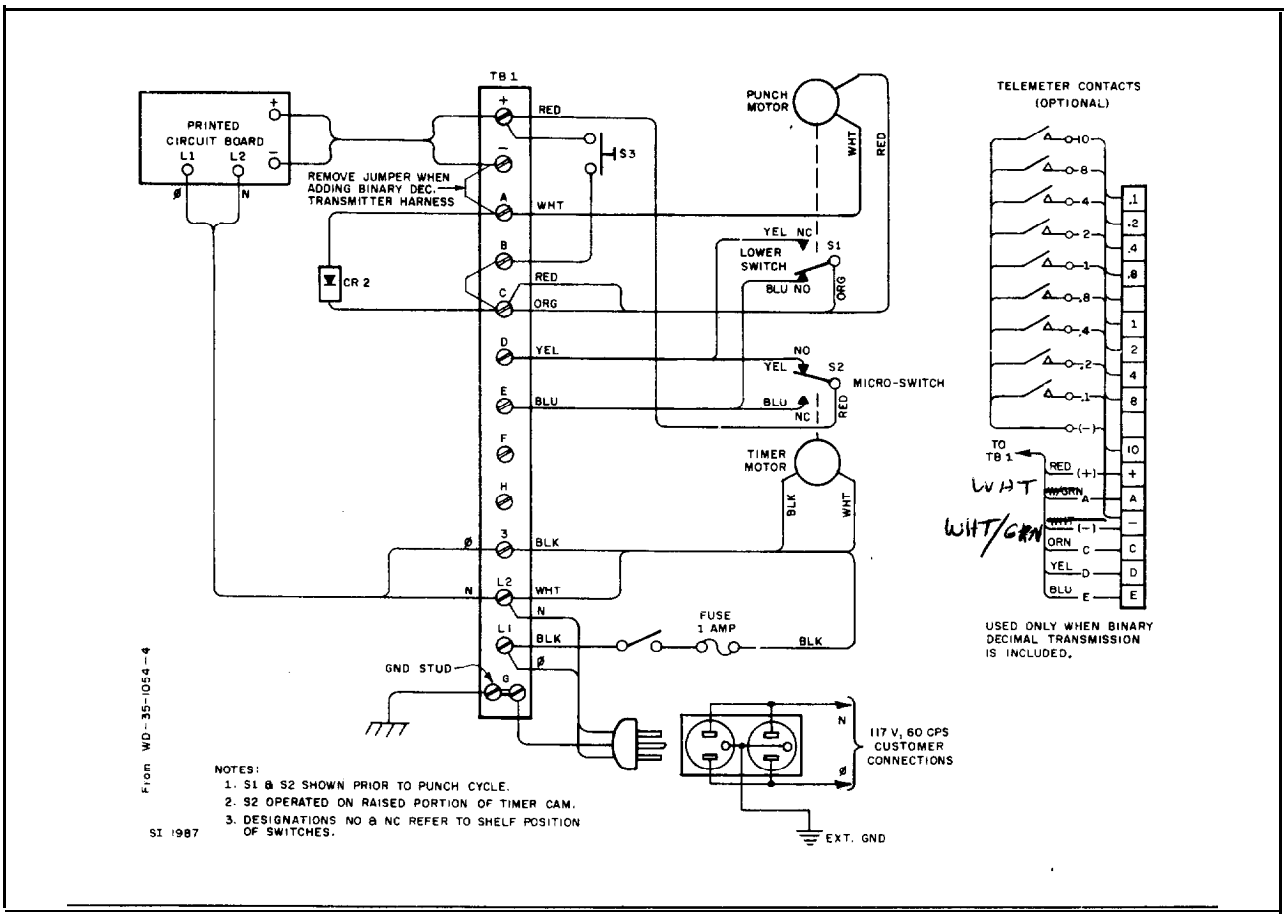

FIGURE 1 WIRING DIAGRAM; SERIES 1558 (AC)

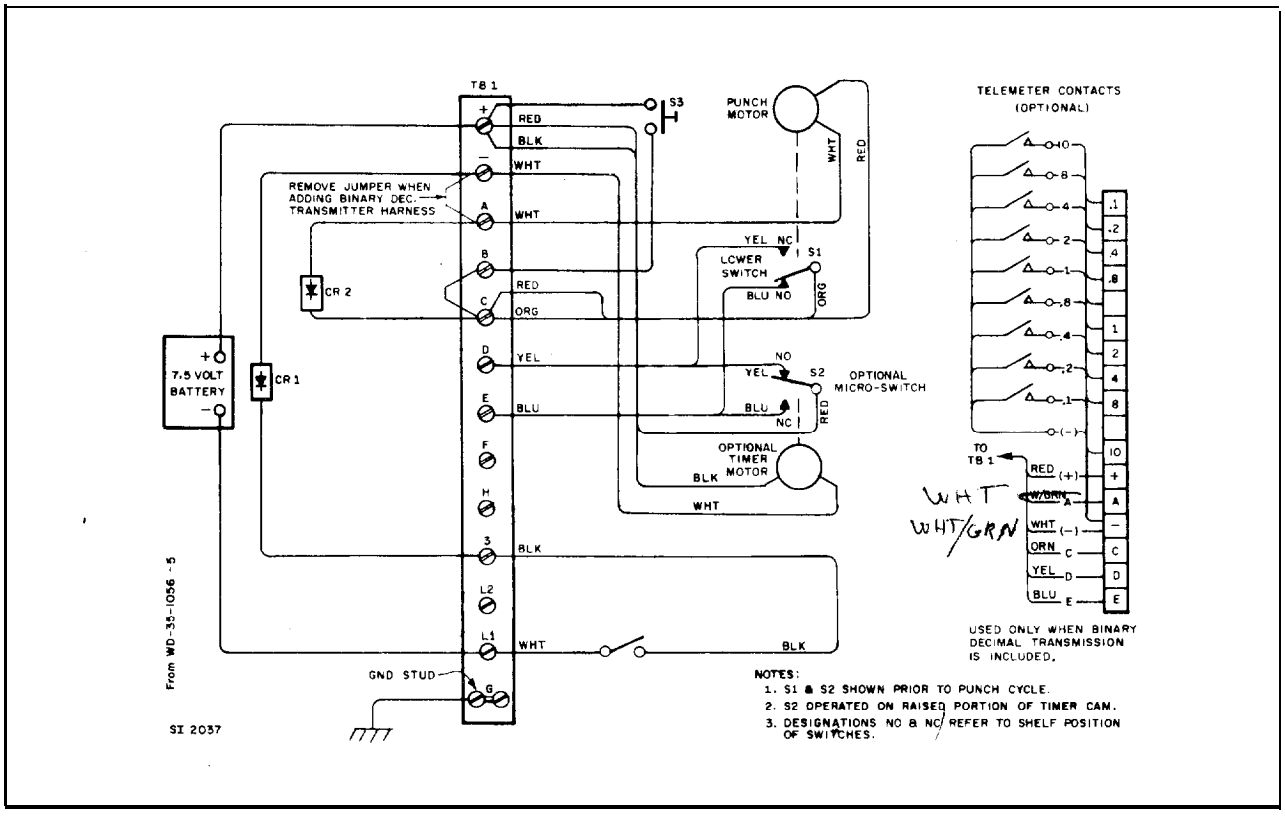

FIGURE 2 WIRING DIAGRAM: SERIES 1559 (DC) WITH MECHANICAL TIMER

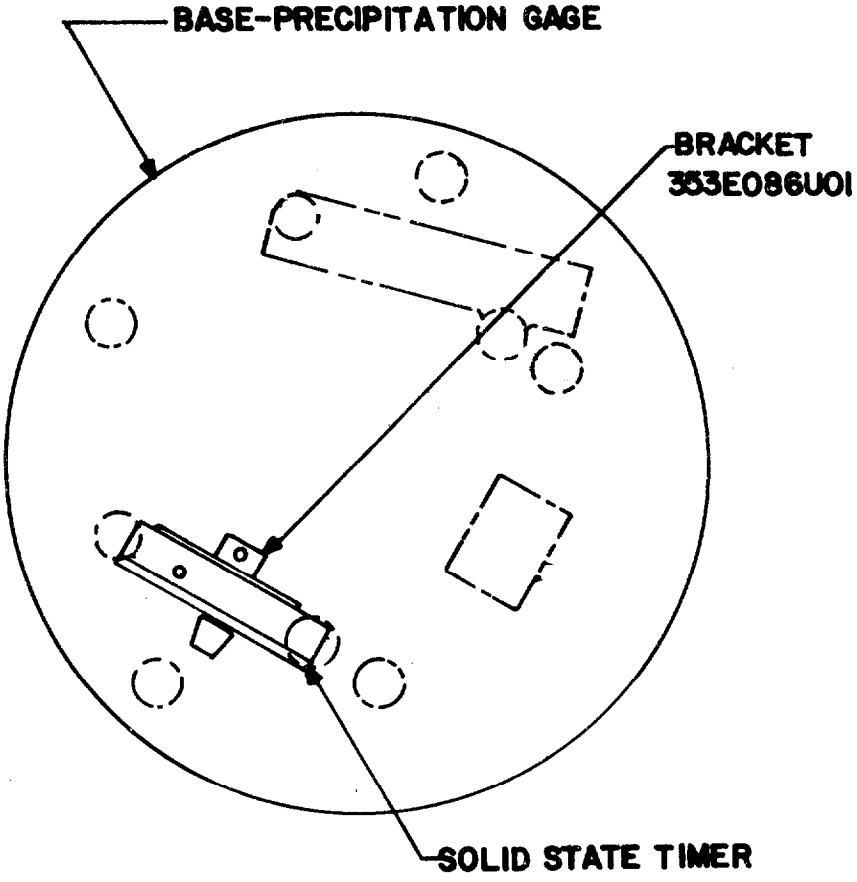

MOUNTING HARDWARE REQUIRED	F&P PART NO.
2 EA. SCREW, HEX. HD. 10-32	025L008T10
2 EA. WASHER, FLAT NO. 10	085A010T10
2 EA. WASHER,LOCK NO. 10	085D010S31
1 EA. SCREW, PAN HD. 6-32	006H006T10
1 EA. WASHER, LOCK NO.6	085D006S31
1 EA. HEX, NUT 6-32	080H202T10

INSTALLATION SOLID STATE TIMER PRECIPITATION GAGE

FIGURE 1

MODIFICATION COMPLETION REPORT

MODIFICATION TITLE Updating of E&P Models 1558(A1) and 1559(A1) Precipitation Gages

MODIFICATION NO. 2 EQUIPMENT CODE D111B SERIAL NO. _____

STATION NAME _____ STATION NO. _____ REG. _____ AREA _____

DATE COMPLETED (YYMMDD) _____ TIME TO COMPLETE (WHOLE HOURS) _____

TECHNICIAN PERFORMING MODIFICATION:

_____
(Signature)

ROUTING:

	INITIALS	DATE
1. AES		
2. REGIONAL ENGINEERING		
3. NWS ENGINEERING DIVISION (W511)		

REMARKS (PROBLEMS ENCOUNTERED OR OTHER PERTINENT INFORMATION):

U.S. DEPARTMENT OF COMMERCE
National Oceanic and Atmospheric Administration
NATIONAL WEATHER SERVICE
Silver Spring, Md. 20910

Date: December 19, 1973

Reply to Attn of: W514

Subject: Transmittal Memorandum for Engineering Handbook No, 10, Issuance 73-5

To: All Regional Headquarters, Area Electronic Supervisors, Electronics Technicians and Substation Network Specialists

1. Material Transmitted:

Engineering Handbook No. 10 - Hydrologic Equipment, Section 3.1; Hydrologic Gaging Modification No. 3, Installation of the Fischer & Porter Mark IV Solid State Timer on Fischer & Porter Precipitation Gages.

2. Summary:

Modification No. 3 provides instructions for installation of the Fischer & Porter Solid State Timer on updated Fischer & Porter Models 1548 and 1559(A1) Precipitation Gages.

3. Effect on Other Instructions:

None.

J. A. Cunningham
Chief, Engineering Division

HYDROLOGIC GAGING MODIFICATION NO. 3

(For Electronics Techniciansand Substation Network Specialists)

SUBJECT : Installation of the Fischer & Porter Mark IV Solid State Timer on Fischer & Porter Precipitation Gages

PURPOSE : To Replace the Ergas Mechanical Timer

EQUIPMENT AFFECTED : Fischer & Porter Converted (Updated) Model 1548 and Updated Model 1559(A1) Precipitation Gages

PARTS REQUIRED : Fischer & Porter Mark IV Solid State Timer with Mounting Hardware and Cable Harness. Note: A 4-volt (red or gold cap) punch motor (WSS/ND550-B1001) should be on hand. Obtain from CLSC

TIME REQUIRED : 1 Man-hour

General .--A number of Fischer & Porter Mark IV solid state timers have been purchased and forwarded to various field locations for installation in gages in need of them. Since there are not enough timers in this purchase to cover all requirements, it is hoped that they will be installed on gages with the highest priority of need. When more money becomes available additional timers will be purchased. These timers are not replacements for defective units.

These instructions are designed for the converted Models 1548 (Hydrologic Gaging Mod. #1) and 1559(A1) (Hydrologic Gaging Mod. #2) gages whose electrical circuits have been streamlined and made compatible with the wiring of the Model 1559(A2) which was the first gage with an electronic or solid state timer. The Model 35B1559 gage, the latest and most modern of the Fischer & Porter precipitation series, was not considered as a target or goal for updating the older gages because it is mechanically and electrically identical to the A2 gage but with radically different TB1 terminal board markings. To try to identify the B-type gage wiring with that of the A2 or Al gage would result in much confusion.

PROCEDURE: -- (Converted 1548 Gage or Modified 1559(A1) Gage.)

1. Remove the hood, collector bucket, and lower case assembly.

2. Disconnect the battery and place it on the other side of the gage on the three raised bosses on the baseplate.

3. Disconnect the Ergas timer leads from TB1 (+) and (-).

4. Remove the timer bracket assembly from the gage front plate.

5. Remove the Ergas Timer. Keep this unit as a spare for other gages or, if not needed, return to the NWS Reconditioning Center at Joliet, Illinois.

6. Remove all the wire leads from the rear connections of TB1. Clip them short to prevent any possibility of short circuits. Pull the telemetering cable leads back through the hole in the front plate for future rerouting.

7. Remove the diode at the rear of TB1 which, in the converted 1548 is connected to TB1-(-) and B. In the 1559(A1) it is connected to TB1-(-) and 3. The back side of TB1 should now be clear except for the diode connected between TB1A and C. This diode should remain connected.

8. Remove and discard the cam follower microswitch assembly. The only components remaining on the timer bracket are the manual punch switch with its two leads clipped from the rear of TB1, and the ON-OFF switch with two leads equipped with spade lugs.

9. Attach #6 spade lugs to the manual punch switch leads. Connect one lead to TB1-B and the other lead to TB1-(+).

10. Connect the white lead of the ON-OFF switch to TB1-F, and the black lead to TB1-(-), for the converted 1548. For the modified 1559(A1), connect the white lead to TB1-L1 and the black lead to TB1-3. Tie the four leads together neatly and replace the timer bracket on the gage front plate.

11. Remove all jumpers from TB1 and TB2 (telemetering terminal board) and reinstall them as follows:

    (a) install a jumper between TB1-(-) and A. This is to be removed when a Binary Decimal Transmitter (BDT) is installed.

    (b) Install a jumper between TB1-B and C. The solid state timer hardware kit contains a jumper if one is needed.

    (c) Attach #6 spade lugs to a piece of red insulated wire 3-l/2 inches long and install this as a jumper between TB1-(+) and TB1-E.

    (d) For converted 1559(A1) only - attach #6 spade lugs to a piece of black insulated wire 4 inches long and connect it as a jumper from TB1-(-) to TB1-3.

    (e) Inspect TB2 (telemetering strip) to make sure that no jumpers remain. Note: The original Model 1548 BDT jumpers were installed on this strip.

12. Attach #6 spade lugs to the ends of the six telemetering cable leads clipped from the back of TB1 in Step #6. Connect these leads to the front of TB1 as follows:

    (a) Red lead to TB1-(+).

    (b) Green (or white) to TB1-(-).

    (c) Brown (or w/grn) to TB1-A.

    (d) Orange to TB1-C.

    (e) Yellow to TB1-D. (On converted 1548 gage, change TB2-D to yellow.)

    (f) Blue to TB1-E. (On converted 1548 gage, change TB2-E to blue.)

13. install the Mark IV Solid State Timer in accordance with the diagram shown in Figure 1. Mounting hardware is supplied with the timer.

14. Replace the 6-volt (plain) punch motor with a 4-volt (red or gold cap) punch motor. This can be obtained from CLSC under WS S/N D550-B101 (FSN6660-916-1274).

15. Connect the power cable supplied with the timer in the following manner:

    (a) The three spade lugs marked 1, 2, and 3 to the corresponding connections on the timer,

    (b) The three spade lugs marked B, E, and L1 to the corresponding terminals on TB1. (L1 to F on 1548 gage.)

    (c) The red(+) lead and elongated black(-) lead to the battery which is now placed on the right side of the gage.

When the timer installation is completed, the gage wiring will look like Figure 2 (converted 1548 gage), or Figure 3 (updated 1559(A1)). The wiring on both types of gages is identical except for the difference in the number of TB1 terminals. TB2 telemetering terminal strips are identical on both gages. Note that on the converted. 1548 gages the blue and yellow leads are interchanged on TB1-D and E and TB2-D and E. This change must be carried through to the BDT in order to prevent loss of memory.

When the battery is connected, the timer will be placed in operation and can only be turned off by disconnecting the battery. It may be possible to hear a faint tone coming from the timer indicating that it is operating. The ON-OFF switch on the gage controls only the punch operation.

TIMER OPERATION PROCEDURE:

(1) Set the selector switch in the 15-minute position and place the toggle switch in TEST position.

(2) Wait at least one minute. If the gage punches out, something is wrong. Check the gage wiring and the timer. If the gage does not punch out the timer is normal.

(3) Two seconds before the desired punchout time, place the toggle switch in the OPERATE position. Within two seconds the gage will punch and will continue to punch at 15-minute intervals. If this does not occur, the timer is defective and should be returned to the Engineering Division, attention W514, 8060-13 Street, Silver Spring, MD. 20910.

The attached "Modification Completion Report" will be prepared and routed to the NWS Engineering Division (W511) as indicated on the report. If the ELTEC is to modify two or more gages, he will make enough copies of the report to provide one for each gagemodified.

Attachments: 1 Each of: Figure 1
Figure 2
Figure 3

1 Each of Modification Completion Report

U.S. DEPARTMENT OF COMMERCE
National Oceanic and Atmospheric Administration.
NATIONAL WEATHER SERVICE

April 4, 1977

W514

TO: All Regional Headquarters, Electronic Program Officers, Electronics Technicians, and Station Network Specialists

FROM: J. M. St. Clair
Chief, Engineering Division

SUBJECT: Transmittal Memorandum for Engineering Handbook No. 10 Issuance 77- 1

1. Material Transmitted:

Engineering Handbook No. 10 - Hydrologic Equipment, Section 3.1; Hydrologic Gaging Modification No. 5, Conversion of AC Type Fischer & Forter Precipitation Gages to DC Operation.

2. Summary:

Modification No. 5 provides instructions and a wiring diagram which will enable a technician to convert an AC type Fischer & Porter precipitation gage to DC operation. A Fischer & Porter, or a Leupold & Stevens solid state timer must be used with this modification.

3. Effect on Other Instructions:

None.

HYDROLOGIC GAGING MODIFICATION NO. 5
(For Electronics Technicians and Substation Network Specialists)

SUBJECT : Conversion of AC Type Fischer & Porter Precipitation Gages to DC Operation

PURPOSE : Improve Gage Reliability

EQUIPMENT AFFECTED : AC Type Fischer & Porter Precipitation Gages

PARTS REQUIRED :
1) AC/DC Conversion Kit for Fischer & Porter Precipitation Gage Consisting of one DC Timer Panel Assembly
2) Solid State Timer, Fischer & Porter Mark Ill or IV, or Leupold & Stevens
3) Eveready #1562 Battery (WS S/N 017-B-2-11)

TIME REQUIRED : 1 Man-hour

GENERAL.-- In some areas where Fischer & Porter ac type precipitation gages. are operating, frequent power failures result in poor records. Where these problems persist, it may be feasible to convert the gage to dc operation.

The AC/DC Conversion Kit, listed above, consists of a complete timer panel assembly which can be directly substituted for the existing ac timer assembly on the gage. It can be used with either the Fischer & Porter Mark Ill or Mark IV timers, or the new Leupold & Stevens solid state timer. An Ergas mechanical timer cannot be used. This kit may be ordered as a nonstock item from the Central Logistics Supply Center in Kansas City, Missouri, as follows:

NSI AC/DC Conversion Kit for Fischer & Porter Precipitation Gage, (Reference Hydrologic Gaging Modification #5.)

The quantity on hand is limited since it is anticipated that not all ac gages will require conversion.

The attached wiring diagram (extracted from Hydrologic Gaging Modification #4, is to be used for wiring the converted gage. After the solid state timer and the timer panel assembly are installed, the gage should be wired to agree with this diagram. If a lead is found

to be too short, it is suggested that it be cut, and an additional length of hookup wire of the same color spliced in. The splices should be neatly soldered and taped.

PROCEDURE:-

1. Shut off the ac power to the, gage and remove the ac line from the power source at the breaker box.

2, Remove and discard the ac line and the power outlet from the base of the gage.Use a 1/2" NPT pipe plug to close the ac line access hole. If it is not available, seal the hole with a nonhardening sealant such as plumber's putty.

3. Disconnect the telemetering leads and the punch motor leads from terminal strip TB1 and remove the ac timer panel assembly. Discard this locally.

4. Install the solid state timer on the left side of the gage (viewed from the front). Fischer & Porter Mark Ill and Mark IV timers use both tapped holes (#l0-32) on the base. Figure 1 of Hydrologic Gaging Modification #3 shows how they are mounted. The Leupold & Stevens timer uses only one, the hole nearest the outside of the base.

5. Install the timer panel assembly, which is the AC/DC Conversion Kit, on the gage front plate.

6. Connect the telemetering leads, the timer, and the punch motor leads to the new TB1 according to the attached wiring diagram.Note that a jumper is required on telemetering terminal strip TB2. This jumper can be obtained from the discarded timer panel assembly.

7. Install the 7-1/2 volt battery on the right side of the gage directly over TB2. The Fischer & Porter Mark Ill and Mark IV timers, except for those obtained from CLSC stock, are furnished with a combined battery-timer cable assembly which will connect the timer and battery to terminal strip TB1. Mark Ill and Mark IV timers in CLSC stock are used primarily as replacements and do not have the mounting hardware or timer-battery cable assembly. Hydrologic Gaging Modification#3, Figure 1, contains a list of hardware parts required for mounting the timer. These parts can be easily procured locally For a cable, use #22 stranded plastic covered wire (red and black) and #6 spade lugs. Wiring should be in accordance with the attached diagram.

The Leupold & Stevens timer can be mounted to the base using only the outside tapped hole. A connector and cable are furnished to connect it to TB1. Battery connections to TB1 should be fabricated locally as indicated above.

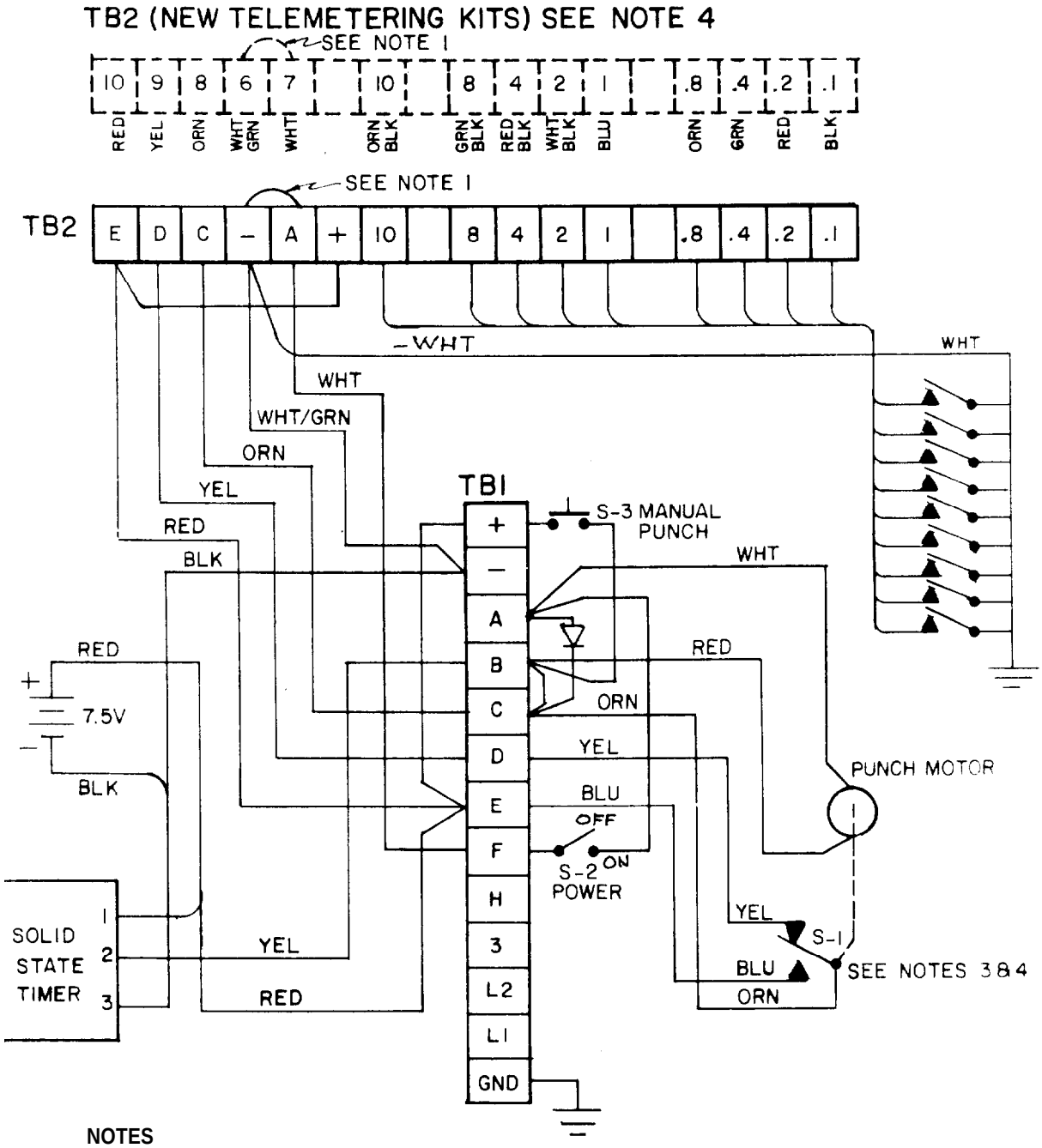

NOTES

1. REMOVE JUMPER WHEN BDT IS USED.
2. S1 SHOWN AT END OF PUNCH CYCLE.
3. S1 CAN BE EITHER OLD TYPE LEAF SWITCH (ONLY I SECTION USED) OR NEW D111-A151A MICROSWITCH AND BRACKET ASSEMBLY. COLOR CODE OF LEADS IS THE SAME.
4. IF NEW TELEMETERING KIT (D111-MS901) IS INSTALLED USE TB2 (DOTTED LINES) TB2-6&7 SHOWN REVERSED TO AGREE WITH OLD TB2-(-)&A.

F&P A2 GAGE AND MODIFIED 1559 A1 GAGE WITH S.S. TIMER

UNITED STATES DEPARTMENT OF COMMERCE
National Oceanic and Atmosphereic Administration
NATIONAL WEATHER SERVICE
Silver Spring, Md. 20910

OA/W5141-CM

November 16, 1982

TO: All NWS Regional Headquarters, Area Electronics Supervisors, Electronics Technicians and Cooperative Program Managers (EHB-10 Distribution)

FROM: OA/W51 - J. Michael St.Clair

SUBJECT: Transmittal Memorandum for Engineering Handbook No. 10, Issuance 82-5

1. Material Transmitted:

Engineering Handbook No. 10 - Hydrologic Equipment; Section 3.1, Hydrologic Gaging; Modification Note No. 6: Conversion of DC Type Fischer & Porter Precipitation Gages to a Rechargeable Battery with Solar Cell.

2. Summary:

Modification Note No. 6 provides instructions for converting a Fischer & Porter Precipitation Gage powered by a 7.5-volt carbon battery to a rechargeable battery with solar cell.

3. Effect on Other Instructions:

A pen-and-ink change and addendum to June 4, 1976 Maintenance Schedule plus addendums to the Hydrologic Equipment Manual.

4. Reporting Equipment Modifications:

Target date for reporting completion of this modification is September 30, 1984. This modification is to be performed by Cooperative Program Managers. The modification should be reported in accordance with the National Weather Service Operations Manual, Chapter B17. The statement "Modification Note No. 6 has been completed" should be added in the Remarks section of Weather Service Form B-44. Use Attachment No. 1 as an example.

5. Certification Statement:

This modification has been tested for operational integrity by the Test and Evaluation Division and at selected regional sites.

HYDROLOGIC GAGING MODIFICATION NOTE NO. 6

(For Cooperative Program Managers and Electronics Technicians)

SUBJECT : Conversion of DC Powered Fischer & Porter Precipitation Gages to Rechargeable Battery with Solar Cell

PURPOSE : Replace the 7.5V Carbon Battery

EQUIPMENT AFFECTED : DC Type Fischer & Porter Precipitation Gages

PARTS REQUIRED : A Modification Kit (see Parts List)

MOD PROCUREMENT : The Modification Kits will be distributed by Data Systems Division, W52

TOOLS REQUIRED : Standard Complement
Small Pipe Wrench

TIME REQUIRED : 1 Man hour

General: -- A Rechargeable Lead/Acid Battery will replace the Hot Shot carbon battery and will be charged by a solar cell. This modification is to be performed by the cooperative program managers.

CAUTION : The maximum current produced by Lead/Acid batteries is very high. Any accidental short circuits or battery reversals. could be dangerous.

PRELIMINARY:

1. The rechargeable battery should be fully charged prior to this modification. (See Attachment No. 2.)

2. Read the modification carefully before proceeding.

3. Check the modification kit with the Parts List, Attachment No. 4.

PROCEDURE:

1. Turn Power Switch OFF.

2. Remove the Hot Shot battery after noting the color code and other polarity markings of the connecting wires.

3. Before the solar cell is attached, it may be necessary to reorientate the equipment. In the base of the F&P gage there are two threaded holes for 1/2 inch pipe. One of these will be used to mount the Solar Cell. It must be positioned so that the solar cell is on the South side in full sun. The access door should not be obstructed.

4. Insert the 6" pipe (Item 11) into the hole selected in Step 3 and secure it with a pipe wrench.

5. Attach the remaining hardware per Figure 1.

6. The solar cell should be orientated facing the sun at Noon,

7. If the wiring that was used to connect the Hot Shot Battery is in poor condition, it should be repaired or replaced before installing the new battery.

8. Install the Lead/Acid Rechargeable Battery.

9. Connect the battery to the solar cell and F&P gage. The red wire from the solar cell (Item 12) should be attached to the positive battery post. The F&P gage should be connected as noted in Step 2.

10. Inspect all work and check the gage for normal operation.

MANUAL CHANGES:

Make the following pen-and-ink addition to the "annual" section of the Maintenance Schedule:

3. See AHOS Modification Note No. 6, Attachment No. 2, for Technical Notes on Rechargeable Batteries.

Insert a copy of Attachment No. 2 into the Maintenance Schedule following Page 6.

Add a copy of Attachments-2, 3, 4, and 5 to the Instruction Manual.

Attachments:

1. (Sample) WS Form B-44 - 1 each
2. Technical Notes - 3 each
3. Drawing, Figure 1 - 3 each
4. Parts List - 2 each
5. Battery Charger Operating Instructions - 2 each

WS FORM B--44
(Duplicator)
(9-75)

U. S. DEPARTMENT OF COMMERCE
NATIONAL OCEANIC AND ATMOSPHERIC ADMINISTRATION
NATIONAL WEATHER SERVICE

SAMPLE

Complete rendition No. ____
Supplement letter b
To complete No. 6
Network ab (a, ab, b, c, x)

REPORT ON SUBSTATION

Substation Bishopville 3W County Lee State SC

Station number 38-0736-6 (Punch card code to 7 digits) Latitude 34 ° 14 ′ Longitude 80 ° 18 ′ No change (Dist. & dir. from previous locations)

Section ____ Township ____ Range ____ Elevation 290 (Feet, m.s.l.), USGS Topo (How determined)

Equipment is located at ____ (Street address, bldg. name, highway No., etc.) which is ____ (Within or outside) city or town limits

Location is ____ (Airline miles to tenths or feet and direction) of Post Office at ____

National Weather Service services (records and/or reports) (Paid) ____ (River, evaporation, temperature and/or precipitation, rainfall (river), etc., for S&E substations and evapo-

(Non-Paid) ____ ration, recording, reporting (river/rainfall) etc., followed by working fund symbol (FC-1, FC-3, IRPN-1, etc.) for stations operated with transferred funds)

Wage Rate ____ (Indicate Funds) Authorization ____ (Date and reference letter authorizing establishment and/or payment)

Instrumental equipment Max & Min; CRS: SRG: all supports F&P Model 1559EA11B
(List equipment; indicate ownership if not National Weather Service. Indicate if precipitation gage is shielded)

Serial numbers of weighing rain gage ____ (WS No.) 6407A1608M30 (Manufacturer's No.)

Time of observation ____ (Precipitation) ____ (Temperature) Time zone ____ (Pacific, Central, etc.) Drainage ____ (Name and No. as listed in CD)

For reporting services only

Reports (other than forms) transmitted by ____ (Telegraph, phone, radio, etc.) Sent to ____

Data reported ____ (Temperature, precipitation, river stage, etc.) Reporting criteria ____ (Daily, weekly, .01 inch precip., etc.)

Charts No. ____ ____ (Mailed to) Record forms No. ____ ____ (Mailed to)

Record published Daily Monthly temp & Precip; SC CD: Hrly Pcpn, SC HPD
(Indicate data published and in which publication)

Observer Mr. George C. Farmer Phone: Home 803-428-3830 Office ____

Address: Mail Rt. #1 Box 32 Bishopville, SC, 29010 (ZIP Code) Freight same

OCCASION FOR THIS REPORT ☐ 1. Establishment ☐ 2. Relocation of equipment ☐ 3. Discontinuance

☐ 4. Publication of record ☐ 5. Change of observer ☐ 6. Change of station name; station formerly

known as ____ ☒ 7. Mod #6 made to RRG.
(Change in operating conditions, equipment, fees to observer, etc.)

Remarks: conversion to solar panel and rechargeable battery.
(Pertinent information such as reason for discontinuance, substitute observer, serial numbers of river gage, etc.)

July 1, 1983 (Effective date) Earl L. Rampery, SNS, WSFO/CAE (Name of person submitting form) July 1, 1983 (Date prepared)

Original to Regional Headquarters WFE4x4; W521x4;NCC(3);WFE2;WSFO/CAE;RFC/ATL;SC/S
(Indicate all offices receiving copy of form) SNS/CAE

(OVER)

INSTRUCTIONS FOR USE OF WS FORM B-44

A report on WS Form B-44 should be prepared for the establishment, discontinuance, or any change in o substation within the hydroclimatic network. (This form is required in addition to WS Forms E-19 and E-23.)

A complete COPY will be made the first time this form is prepared and whenever any piece of equipment is moved in any respect. It will be designated as "Complete rendition No. 1," other spaces remaining blank. Later minor changes (where no equipment is moved) con be shown by filling in pertinent blanks only (e.g., "Supplememt letter A," "To complete No. 1," the second Supplement will be "B" to "Complete No. 1," etc., complete rendition space remaining blank). When the next move of any instrument or other major change is made, o complete rendition is necessary and should be designated as No. 2, etc. A supplemental rendition, if used, should completely describe the minor change. This report should be prepared by the Substation Network Specialist or other National Weather Service employee at the time the action is effected. In case the equipment is relocated by the observer, he should be requested to furnish sufficient information for o complete report. The employee effecting the action will submit draft copy WS Form B-44 to RSMS in whose region the station is located, for typing and distribution. The original copy will be forwarded to Regional Headquarters with copies to NWS Headquarters, NCC, all other interested offices, and one for the Substation Network Specialist's file. NOTE: In completing "OCCASION FOR REPORT," "Relocation of Equipment" should not be checked if relocation breaks record. In this case, check "Establishment" and "Discontinuance" with separate forms.

SKETCH OF INSTRUMENT LOCATION: To begin sketch, attach WS Form B-44 to clip board and place on top of rain gage with top of form towards north using the rain gage as the center of sketch area. Step off distance of each obstruction from gage. Using a scale of 1 inch to 100 feet, sketch the obstructions in their respective locations, with regard to direction and distance from the gage. Place a clinometer level on top of clip board and sight the angle of each obstruction from top of gage to top of obstruction. Indicate the angle of obstruction on a straight line drawn from the gage toward the object. Make detail sketch of location of instrumental equipment in lower left-hand corner of sketch area. A new diagram is required whenever the old sketch does not accurately represent the exposure of the instruments.

STATION NAME:

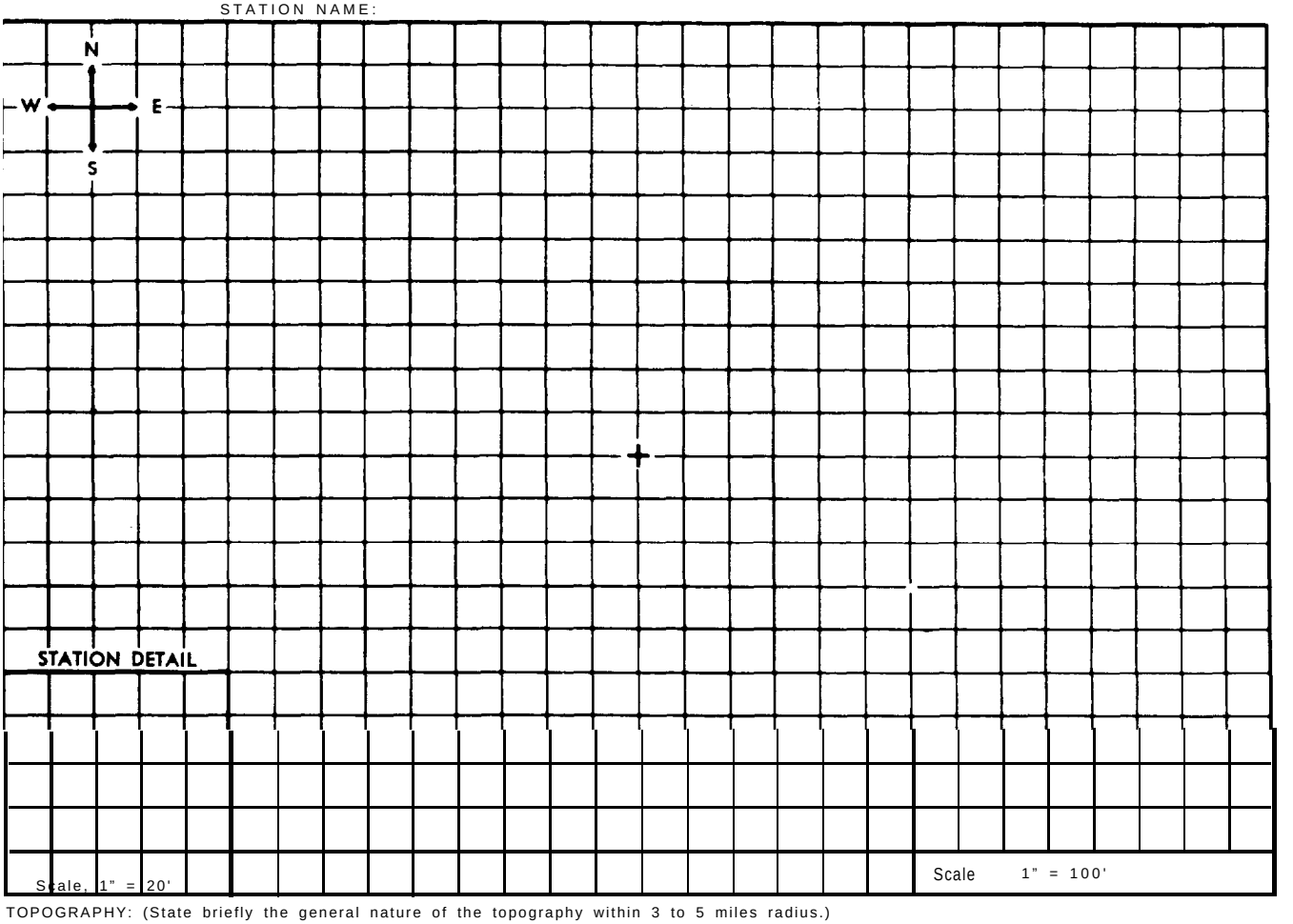

TOPOGRAPHY: (State briefly the general nature of the topography within 3 to 5 miles radius.)

DIRECTIONS FOR REACHING STATION: Give instructions in detail. If outside town or city, give direction and distance, highway number or name, and any other pertinent information which will enable the inspector to drive directly to the station without previous knowledge of its location.

Attachment No. 2 to Modification Note No. 6

LEAD/ACID RECHARGEABLE BATTERY TECHNICAL NOTES

CAUTION: The cells used in Lead/Acid Rechargeable Batteries have a low internal impedance and are capable of delivering high currents if externally shorted. The resulting heat can cause severe burns and is a potential fire hazard. Particular caution should be used when the person working on the equipment is wearing metal rings or watchbands.

All battery systems have extremely variable service life depending upon the type of cycle, environment, and charge to which the cell is subjected during its life. Geographic location will affect all of these.

Field tests have indicated some things we can anticipate. In periods of cold weather with little sunlight, such as during winter in northern states, the no load voltage of the battery packs will drop below 8 volts. This is not a problem because they will return to normal with a change in season. In some cases, the solar cell will not recharge a battery that has been partially discharged, therefore, all batteries should be charged with charger D111-A152-A5 or equivalent before installation.

The batteries have good storage characteristics. When fully charged they can be stored at room temperature for over 2 years. If the voltage of any individual cell drops below 1.8 volts during storage, that cell is usually defective.

If the condition of a battery is in question, it should be fully charged with battery charger D111-A152-A5 or equivalent and stored at room temperature for 5 days. After 5 days, if the open circuit voltage of the battery pack at room temperature is below 8.5 volts, it should be discarded. I-f the individual cells can be tested, the minimum voltage for each cell is 2.1 volts.

Replacement of individual cells could be hazardous and should not be attempted.

Attachment No. 4 to Modification Note No. 6

PARTS LIST

ITEM NO.	PART NUMBER	DESCRIPTION
1	D111-A152A1	Solar Panel, Solarex Corp., Type 804H
2	D111-A152SP1	Mounting Bracket, see drawing
3	D111-A152TB1	Terminal Block, Cinch No. 3-140
4	D111-A152CR1	Diode, IN4004
5	D111-A152SP2	Waterproof Strain Relief, T&B #2520
6	D111-A152SP3	Coupling, 1/2 inch Ridged Conduit
7	D111-A152SP4	U-Bolt for 7/8 inch OD Pipe, 1/4--20 thread, 1-3/4 inch long (2 each)
8	D111-A152SP5	Clamp Plate, U-Bolt (2 each) see drawing
9	D111-A152SP6	One-half inch Galvanized Pipe, 18 inches long
10	D111-A152SP7	Entrance "L" for 1/2 inch Conduit
11	D111-A152SP8	One-half inch Galvanized Pipe, 6 inches long tube
12	D111-A152W1	Cable, 2-conductor, Alpha 1172, 5 ft.6 inches long
13	D111-A152MS1	Grommet, Smith No. 2145
14	D111-A152MS2	Grommet, Smith No. 2172
15	D111-A152MS3	Gasket, Neoprene, 1/4 inch wide, 1/32 inch thick
16	D111-A152SP9	Cover, Zero No. Z32-32B, 1 inch high, see drawing
17	D111-A152SP10	Screw, 6-32 x 1-1/4 inch, stainless steel (4 each)
18	D111-A152SP11	Lockwasher, No. 6 Internal Star, stainless steel (4 each)
19	D111-A152SP12	Screw, 6-32 x 3/8 inch, stainless steel (4 each)
20	D111-A152SP13	Screw, 1/4-20 x 5/8 inch, stainless steel (2 each)
21	D111-A152SP14	Flat Washer, 1/4 inch, stainless steel (4 each)
22	D111-A152SP15	Lockwasher, split 1/4 inch, stainless steel (2 each)
23	D111-A152SP16	Nut, 1/4-20, Hex stainless steel (2 each)
24	D111-A152SP17	Lug, spade #6 for #22 wire, VACO #13206 (8 each)
25	D111-A152BT1	Battery, lead/acid, rechargeable, 8 volt, 5 amp./Hr., with threaded #6-32 stud connectors and hand twist nut. Gates In., P/N 0800-0027C

Attachment No. 5 to Modification Note No. 5

CAUTION: The cells used in Lead/Acid Rechargeable Batteries have a low internal impedance and are capable of delivering high currents if externally shorted.

Read Attachment No. 2, Lead/Acid Rechargeable Battery Technical Notes before attempting to operate this battery charger.

In normal operation, the battery charger may be left connected to AC power. It is internally protected against short circuits. The power indicator shows that AC power is applied to the unit.

Connect the red battery charger lead to the positive battery post and the black battery charger lead to the negative battery post.

The charging indicator, when fully on, indicates the battery is less than 90% recharged.

When the charging indicator flashes on and off, it indicates the battery is 90 to 99% recharged.

Finally, when the charging indicator goes out, the battery is fully charged.

NOTE: The indicator will also be out if not properly connected to the battery.

REVISIONS					
Zone	Ltr.	Description	Date	Rev By	App'd
	A	ADDED BATTERY	11/2/81	RSD.	
	B	CHANGED BATTERY	10/29/82	RSD.	
	C	ADDED TERMINAL EXPLODED VIEW			
	D	ADDED NOTE 4	12/6/82	RB	

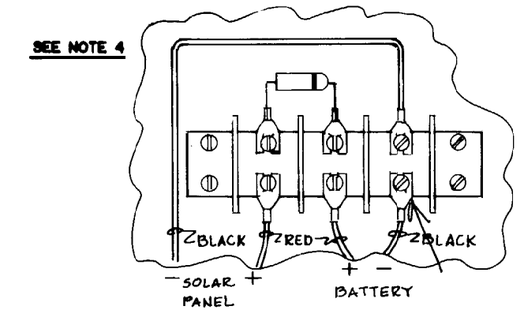

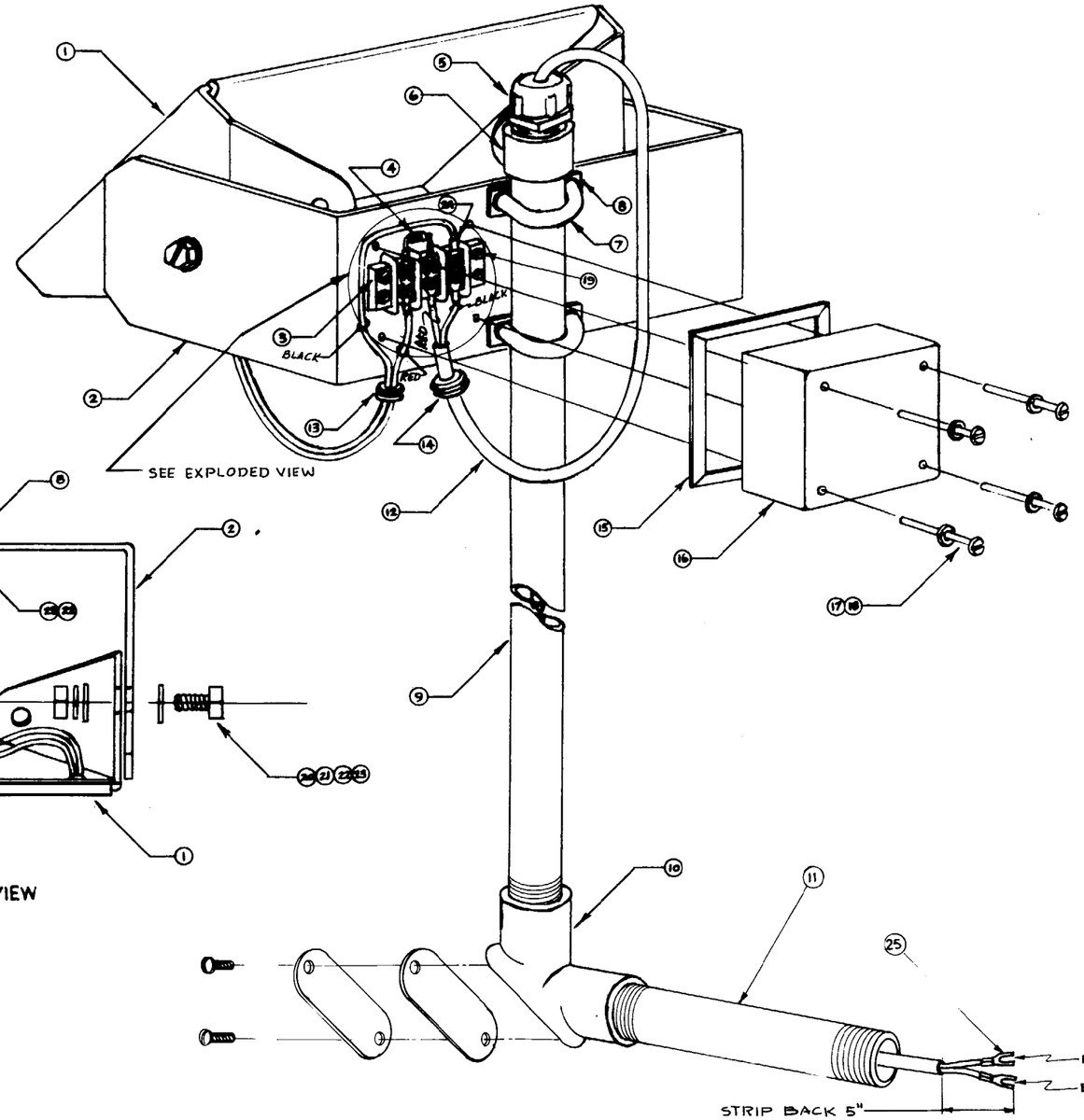

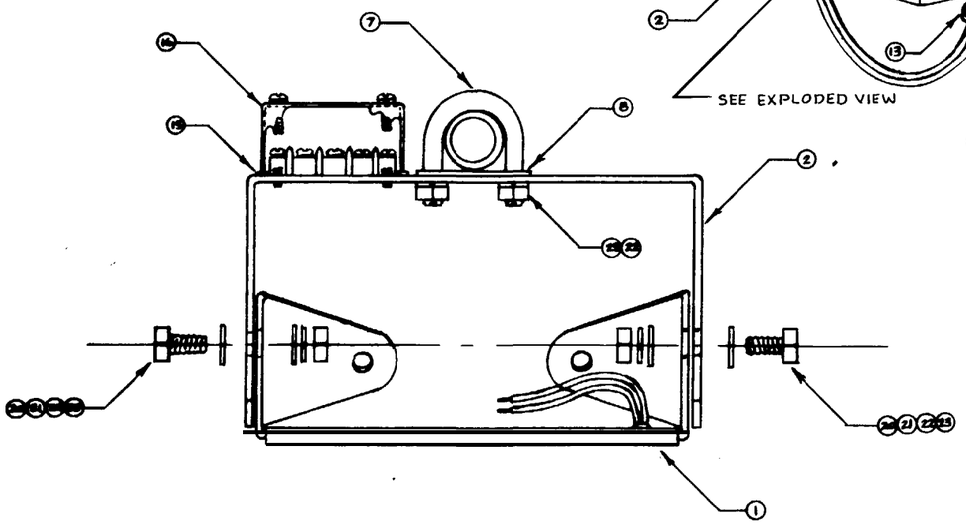

PARTIAL BOTTOM VIEW

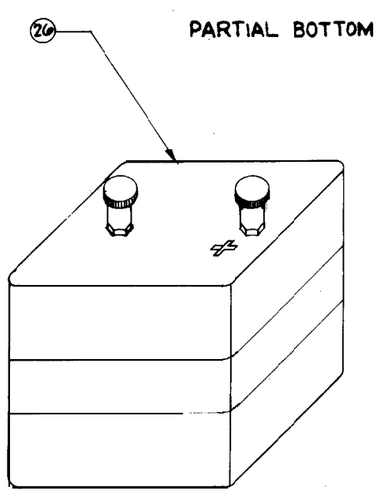

PARTS LIST

1. SOLAR PANEL, SOLAREX CORP. TYPE 804H.
2. MOUNTING BRACKET, SEE DWG.
3. TERMINAL BLOCK, CINCH #3-140
4. DIODE, IN4004
5. WATERPROOF STRAIN RELIEF, T&B #2520.
6. COUPLING, ½ RIDGED CONDUIT
7. U BOLT, FOR ⅜" O.D. PIPE, ¼"-20 THREAD, 1¾" LONG (2 EA.)
8. CLAMP PLATE, U BOLT, SEE DWG. (2 EA.)
9. GALVANIZED PIPE, ½" D. 18" LONG
10. ENTRANCE "L", FOR ½" CONDUIT
11. GALVANIZED PIPE, ½" D. 6" LONG TBE.
12. CABLE, 2 CONDUCTOR, ALPHA 1172, 5'-6" LONG
13. GROMMET, SMITH #2145
14. GROMMET, SMITH #2172
15. GASKET, NEOPRENE, 1/4" WIDE 1/32" THICK. ATLANTIC INDIA RUBBER, CO. P/N X-142.
16. COVER, SEE DWG. ,ZERO #Z32-32B,1H.
17. SCREW, 6-32 × 1¼", SS, PH. (4 EA.)
18. LOCKWASHER, #6 INTERNAL STAR, SS (4 EA.)
19. SCREW, 6-32 × ⅜", SS, PH. (4 EA.)
20. SCREW, ¼"-20 × ⅝", SS, HEX SLOTTED (2 EA.)
21. FLAT WASHER, ¼" SS (4 EA.)
22. LOCKWASHER, SPLIT ¼" SS (4 EA.)
23. NUT, ¼"-20, HEX SS (4 EA.)
24. LUG, SPADE #6 FOR #22 WIRE, VACO #13206 (6 EA.)
25. LUG, SPADE #8 FOR #22 WIRE, VACO #13208 (2 EA.)
26. BATTERY GENERAL ELECTRIC P.N. 47B050DC06001 8 VOLT 5 AMP HR., WITH THREADED #8-32 STUD CONNECTORS AND HAND TWISTED NUT.

NOTE 1. RUN BATTERY CABLE THROUGH ENTRANCE "L" AFTER PIPE IS ASSEMBLED TO GAGE.

NOTE 2. WIRES FROM SOLAR PANEL & CABLE FEED THROUGH GROMMETS IN COVER BEFORE AFFIXING TO TERMINAL BLOCK. HOLES IN BOTTOM OF COVER MAY BE TRANSPOSED IN SOME UNIT.

NOTE 3. FASTEN GASKET (FIND No. 15) TO BRACKET WITH CONTACT CEMENT.

NOTE 4. DUE TO MANUFACTURING INCONSISTENCIES, THE DIODE POLARITY AND ASSOCIATED WIRING MAY DIFFER FROM THIS DIAGRAM. IF YOUR UNIT IS WIRED DIFFERENTLY REWIRE AS SHOWN.

FIND NO.	ELEC REF DES	NOMENCLATURE OR DESCRIPTION	QTY REQD	PART OR IDENTIFYING NO.	DWG SIZE	CODE IDENT	SPECIFICATION OR MATERIAL

LIST OF MATERIAL

UNLESS OTHERWISE SPECIFIED:
DIMENSIONS ARE IN INCHES
TOLERANCES: ANGLES ± .5°
3 PLACE DECIMALS ± .005
2 PLACE DECIMALS ± .02

ENGINEERING DIVISION
SILVER SPRING, MD. 20910

PREPARED	R. I. Dec.	3/4/81
CHECKED		
DESIGN		
APPROVED BY		
APPROVED BY		

U.S. DEPARTMENT OF COMMERCE
NATIONAL OCEANIC & ATMOSPHERIC ADMINISTRATION
NATIONAL WEATHER SERVICE

HYDROLOGIC GAGING
MOD. KIT #6
MAIN ASSEMBLY

SIZE D | DATE 12/06/82 | DRAWING NO. D111-A152-1/D
SCALE | SHEET | REV

U.S. DEPARTMENT OF COMMERCE
National Oceanic and Atmospheric Administration
NATIONAL WEATHER SERVICE
Silver Spring, Md. 20910

May 22, 1985 W/OTS141 - BGM

TO: All NWS Regional Headquarters, Area Electronics Supervisors, and Electronics Technicians (EHB-10 Distribution)

FROM: W/OTS1 - J. Michael St. Clair

SUBJECT: Transmittal Memorandum for Engineering Handbook No. 10, Issuance 85-1

1. Material Transmitted:

Engineering Handbook No. 10, Hydrologic Equipment, Section 3.1, Modification Note 7: Installation of a 436A Handar incremental shaft encoder to the Fischer and Porter (F&P) precipitation gage.

2. Summary:

Modification Note 7 provides instructions for installing the 436A Handar incremental encoder to the Fischer and Porter precipitation gage. This modification applies only to those Satellite Data Collection Platform Handar (DCPH) systems with F&P precipitation gage(s).

3. Effect on Other Instructions:

None.

4. Certification Statement:

This modification has been successfully tested for operational integrity by NWS Test and Evaluation Division at Sterling, Virginia, and WSFO Denver, Colorado and WSFO Portland, Maine.

5. Reporting Modification to WSH Engineering Division:

Target date for completion of this modification is August 30, 1985. Each completed equipment modification shall be reported on the WS Form H-28, Engineering Progress Report, EHB-4, Part 2 (see attached exhibit).

HYDROLOGIC GAGING MODIFICATION NO. 7
(For Electronics Technicians)

SUBJECT : Installation of a 436A Handar incremental shaft encoder to the Fischer and Porter (F&P) precipitation gage.

PURPOSE : To adapt a Handar incremental shaft encoder to the Fischer and Porter precipitation gage to enhance the reliability and quality of telemetered data.

EQUIPMENT AFFECTED : Fischer and Porter precipitation gage(s) located at DCPH satellite sites.

PARTS PROVIDED :
- 1 ea. - Spur Gear #422A261 (modified)
- 1 ea. - Roll Pin, 3/32 x 3/4
- 1 ea. - Set Screw, 6-32 x 1/8
- 1 ea. - Hubless 35-tooth Chain Sprocket
- 1 ea. - Hubbed 35-tooth Chain Sprocket
- 1 ea. - Drive Chain 3CCF-100-E (Berg)
- 1 ea. - Incremental Encoder 436A
- 1 ea. - NWS Adapter Bracket and Cable
- 4 ea. - 1/4-20 Stainless Steel Hardware, 1" Bolts, Nuts, Flat/Lock Washers
- 1 ea. - Incremental Encoder Card (P/N 540-7014)
- 1 ea. - Drive Pin Punch, 3/32"

MOD PROCUREMENT : All parts required to complete each Fischer and Porter (F&P) precipitation gage modification will be shipped directly to the station.

SPECIAL TOOLS REQUIRED : Drive Pin Punch, 3/32"

TEST EQUIPMENT REQUIRED : 545A Programming Set (D900-2)

TIME REQUIRED : 2 Hours

General:

The incremental shaft encoder, that is used where NWS telemeters river gages via GOES, has been adapted to fit the F&P precipitation gage.

This modification incorporates a 436A Handar incremental shaft encoder to replace telemetry contacts now used by the DCPH system to read the F&P precipitation gage.

This modification consists of two parts. Part I provides station locations that require this modification, and the installation procedure to be followed in completing the modification. Part II provides the procedure to be followed for system initialization after completion of installation.

I. Handar Incremental Shaft Encoder (436A)

A. Locations: Stations maintaining satellite DCPH systems with F&P precipitation gage(s) that requires this modification are as follows:

1.	Boise, ID	5.	Medford, OR
2.	Denver, CO	6.	Portland, ME
3.	Great Falls, MT	7.	Phoenix, AZ
4.	Fairbanks, AK	8.	Seattle, WA

B. Procedure: Steps 1 through 13 should be accomplished in completing Part I of the modification.

1. Power off the DCPH system.

2. Open the DCPH system and disconnect the ribbon cable coming from J1 to the ADR card (P/N 540-7008). Remove the ADR card and install the incremental encoder card (P/N 540-7014) provided in its place. Connect the ribbon cable (J1) to the incremental encoder card. Return removed ADR and spare ADR cards to Bob McCormick, NWS, 8060 13th St., Rm. 326, Silver Spring, MD 20910.

3. Remove the hood, collector and lower case from the F&P precipitation gage. Disconnect the battery leads.

NOTE 1

When removing or installing the roll pin, be careful not to apply excessive force which may result in a bent shaft.

4. Refer to Figure 1 to locate the spur gear. Turn code disc until roll pin is in a position to be punched out. Tape code disc and drive gear shaft assembly in this

position. (Refer to instruction bulletin 35-9009, Page 5.) Do not allow either of these to move as the spur gear is replaced.

5. Use the drive pin punch (3/32") provided and drive the roll pin from the spur gear and shaft. Loosen the spur gear set screw and remove gear.

6. Install the spur gear that has a chain sprocket mounted to it. Align the holes in the spur gear with the holes in the shaft and tighten the set screw. Drive the roll pin through the holes in the spur gear and shaft. Remove tape from the code disc and gear assembly. Rotate the spur gear making sure that there is no binding.

NOTE 2

To remove and install the 1/4-20 bolts from the support bracket, a 12" extension and 7/16" socket are needed.

7. Remove the 1/4-20 3/4" bolts (refer to Figure 1) from the scale support.

8. Install the incremental encoder and bracket with the shaft toward the code disc. Use the 1/4-20 1" bolts provided and bolt the bracket to the support scale.

9. Install the 35-tooth hubbed chain sprocket onto the incremental shaft encoder. Align the set screw to the flat of the shaft and tighten.

10. Loosen the 4 hex head bolts holding the incremental shaft encoder to the bracket. Install the drive chain (3CCF-100-E) onto the chain sprockets. Adjust the drive chain for proper tension by moving the incremental shaft encoder up or down. The drive chain should be reasonably tight. After proper tension is obtained, tighten the four hex head bolts,

11. Disconnect and remove the wires on the DPDT switch that switches in the DCPH system or the timer. There are three models of F&P precipitation gages. Determine your model and use the following table to wire the timer (D111-M200) to TB1 (refer to Figure 3).

	Timer (D111-M200)	To
Model - 1559-A1	WHT	TB1-C
	RED	TB1-E
Model - 1559A2	WHT	TB1-C
	RED	TB1-E
Model - 1559B1	WHT	TB1-+
	RED	TB1-1

12. Remove the wires from TB2 of the F&P precipitation gage that are coming from the interface enclosure. Connect the following wires that were removed from TB2 to TB1 of the incremental encoder (refer to Figure 2). Remove telekit and use for a station spare.

From - TB2	To - Incremental Encoder
TB2 .1 Black	TB1 - 5
TB2 .2 Red	TB1 - 4
TB2 .4 Green	TB1 - 3
TB2 .8 Orange	TB1 - 6

13. Restore power to the F&P precipitation gage. Check that the code disc drive is tracking and punching correctly. This concludes installation of Modification Note 7. Refer to the test procedure for evaluation and testing of this modification.

II. System Initialization

NOTE 3

At this point, the DCPH system should have the incremental encoder card and all cables connected. The incremental shaft encoder should be mechanically connected to the F&P precipitation gage by the drive chain sprocket assembly.

A. System Start-Up

1. Connect the programming set to the DCPH system.

2. Turn the DCPH and the 545A programming set on.

3. The DCPH system is now ready to accept the configuration program.

B. Programming

1. The following program can now be entered into the 545A programming set.

```
R    HANDAR 540A DCP - REV 3.1
R    ID                        FEEDBACO
R    STATION TIME              18:41:24
R    YEAR (XX)                       84
R    DCP JULIAN DATE                136
R    GOES PRI XMT MODE               02
R    1ST GOES XMT TIME         18:50:00
R    PRI XMT INTERVAL          06:00:00
R    GOES SEC XMT MODE               20    Note:  This until we
R    TEL   AREA CODE              0-000      find software fix!
R    TEL   LOCAL               000-0000
R    MODEM XMT FORMAT                00
R    1ST DIAL TIME             00:00:00
R    DIAL INTERVAL             00:00:00
R    TEL EMG XMIT 1=0N               00
R    AUTO DUMP? 1=Y 0=N              00
R    1ST LOG TIME              00:00:00
R    LOG INTERVAL              00:00:00
R    DRIVE MODE                      00
R    LOG MODE                        00
R    CHANNEL NO.                     01    Precip
R01  SENSOR TYPE                     11
R01  CARD SLOT                       03
R01  0=CW+   1=CCW+                  01    Note:  Check for
R01   VALUE'/ INCREMENT          00.10      correct direction!
R01  CURRENT VALUE               10.l0
R01  MEAS INTERVAL            00:15:00
R01  START OF MEAS            18:45:00
R01  LEVEL 1 MEAS TYPE              001
R01  XMIT 2 OR 3 BYTES?              03
R01  HIGH LIMIT               NO LIMIT
R01  LOW LIMIT                NO LIMIT
R01  HIGH DIFF LIMIT             00.20
R01  LOW DIFF LIMIT           NO LIMIT
R    CHANNEL NO.                     02    Battery
R02  SENSOR TYPE                     12
R02  MEAS INTERVAL            06:00:00
R02  LEVEL 1 MEAS TYPE              001
R02  XMIT 2 OR 3 BYTES?              03
R02  HIGH LIMIT               NO LIMIT
R02  LOW LIMIT                NO LIMIT
R02  HIGH DIFF LIMIT          NO LIMIT
R02  LOW DIFF LIMIT           NO LIMIT
```

2. To check operational integrity, place a known calibration weight or weights into the collector bucket and read the current value from the 545A programming set.

3. After system operation is verified and working, replace the lower case, collector, and hood assembly on the F&P precipitation gage. This completes the modification.

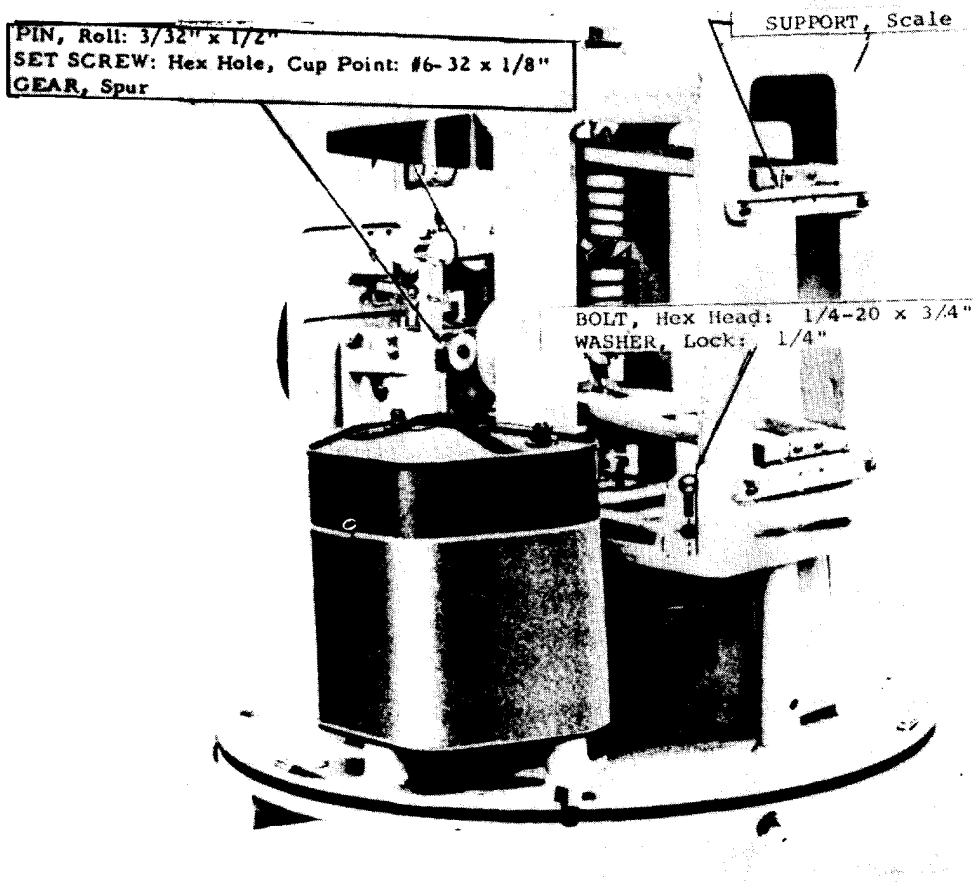

FIGURE 1

PRECIPITATION GAGE-RECORDER, REAR VIEW

INCREMENTAL ENCODER WIRING DIAGRAM

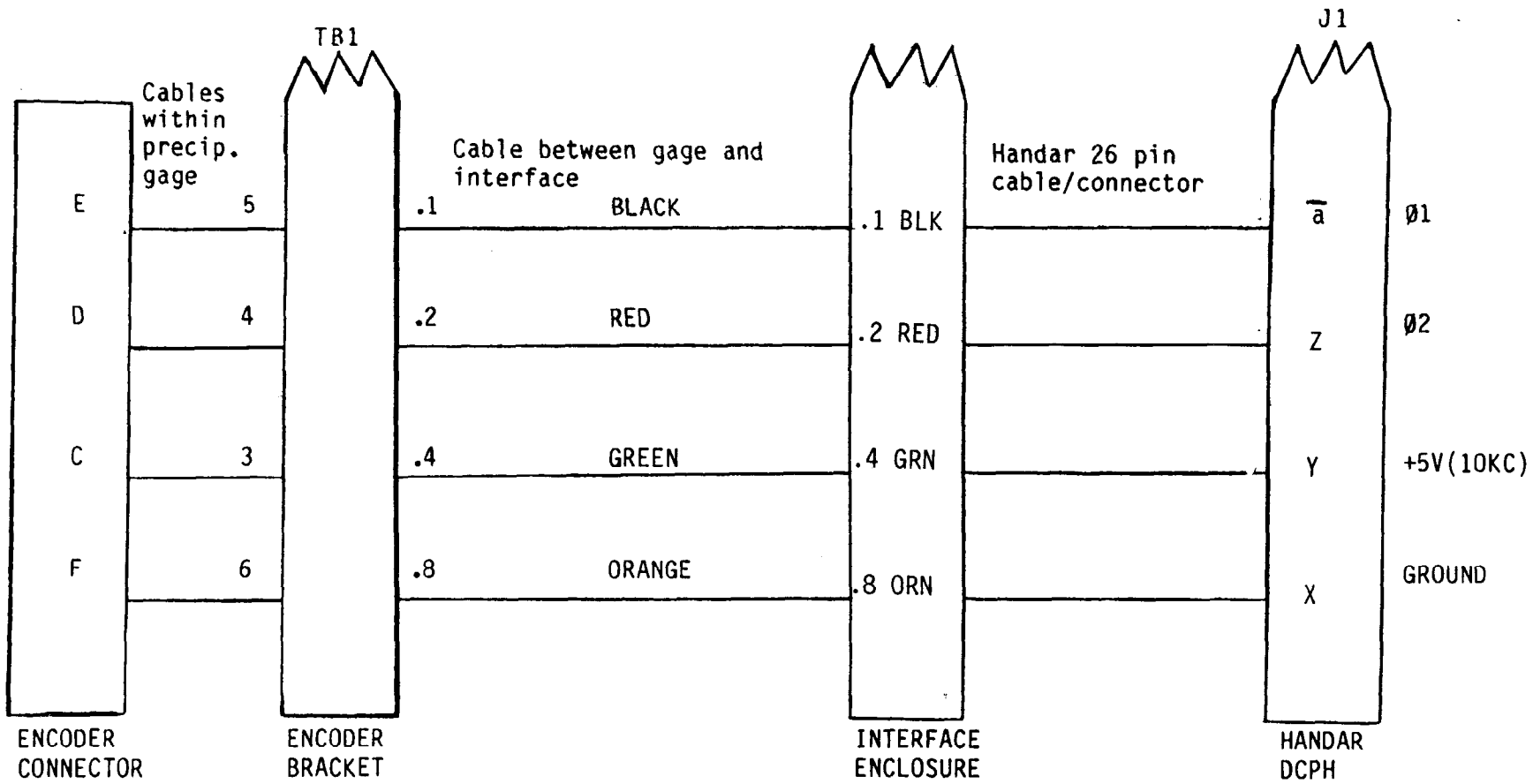

FIGURE 2

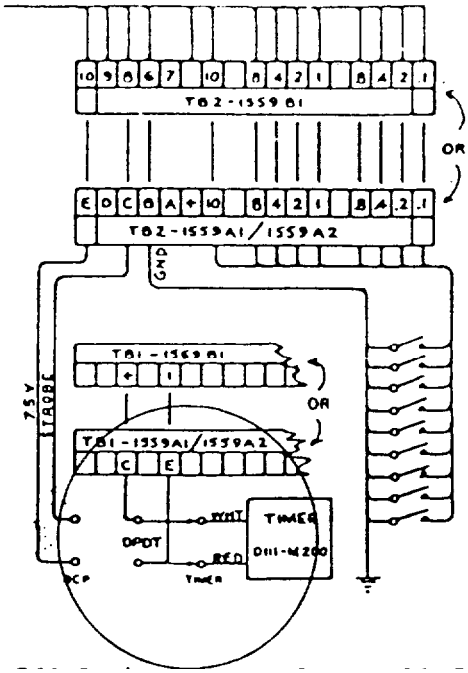

FISHER & PORTER PRECIP GAGE 3 MODELS

1559A1
1559A2
155981

BEFORE

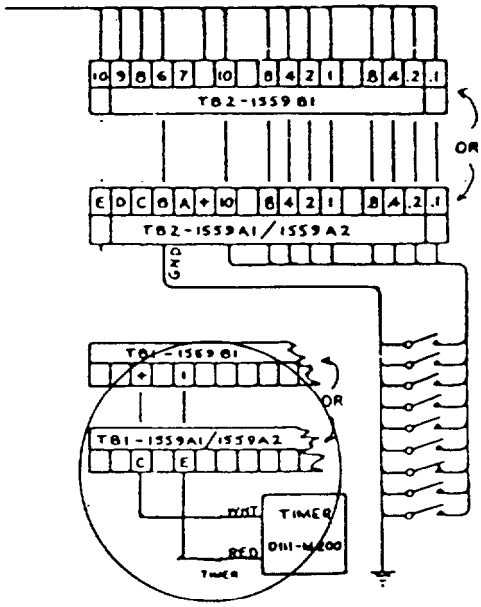

FISCHER & PORTER PRECIP CAGE 3 MODELS

1559A1
1559A2
1559B1

AFTER

DPDT SWITCH WIRING

FIGURE 3

REVISIONS					
Zone	Ltr.	Description	Date	By	App'd

NOTES:

1. HOT STAMP "D105-1W2" IN ACCORDANCE WITH MIL-M-60903, AFTER INSTALLATION OF SLEEVING.
2. APPLY ADHESIVE SEALANT, FIND NO. 8, TO POT REAR OF CONNECTOR, FIND NO. 1.
3. SOLDER, FIND NO. 6 TO FIND NO. 1, IN ACCORDANCE WITH MIL-STD-454, REQUIREMENT 5, USING FIND NO. 11.
4. CRIMP TERMINAL LUGS, FIND NO. 7, IN ACCORDANCE WITH MIL-STD-454, REQUIREMENT 19
5. EQUIVALENT INTERCHANGEABLE COMMERCIAL OR MS ITEMS MAY BE USED.

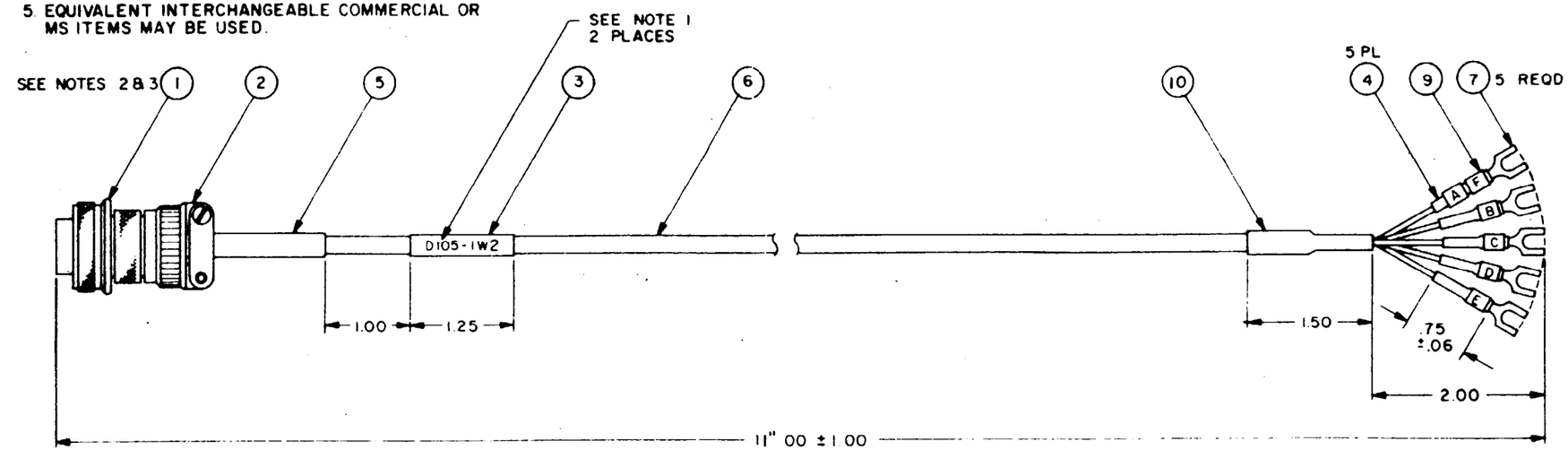

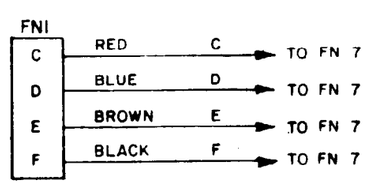

WIRING DIAGRAM
FOR
GRAY-CABLE

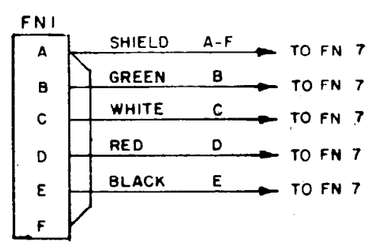

WIRING DIAGRAM
FOR
RED - CABLE

FIND NO	ELEC REF DES	NOMENCLATURE OR DESCRIPTION	QTY REQD	PART OR IDENTIFYING NO	DWG SIZE	CODE IDENT	SPECIFICATION OR MATERIAL
11		SOLDER	AR	Sn60WRAP3			QQ-S-571
10		INSUL SLVG, HT SHRINKABLE, BLK	1	M23053/5-106-0			MIL-I-23053/5
9		WIRE MARKER, A-Z	1	WCAZAJS		59730	T & B
8		ADHESIVE	AR	RTV 102		01139	GE
7		TERM LUG, 22-18 AWG, NO 8 STUD	5	A114		59730	T & B
6		CABLE, 4 CONDUCTOR, 22 AWG	1	83396		16428	BELDEN
5		BUSHING	1	MS3420-6			
4		INSUL SLVG, HT SHRINKABLE, BLK	5	M23053/5-105-0			MIL-I-23053/5
3		INSUL SLVG, HT SHRINKABLE, BLK	2	M23053/5-106-0			MIL-I-23053/5
2		CABLE CLAMP	1	97-3057-1007		02660	AMPHENOL
1		CONNECTOR, PLUG	1	MS3106A14S-6S			

LIST OF MATERIAL

UNLESS OTHERWISE SPECIFIED
DIMENSIONS ARE IN INCHES
TOLERANCES ANGLES ± 5°
3 PLACE DECIMALS ± .005
2 PLACE DECIMALS ± .12

ENGINEERING DIVISION
SILVER SPRING, MD. 20910

U.S. DEPARTMENT OF COMMERCE
NATIONAL OCEANIC & ATMOSPHERIC ADMINISTRATION
NATIONAL WEATHER SERVICE

PREPARED	R.E.B.	1/11/85
CHECKED	R.E.R.	1/12/85
DESIGN		
APPROVED BY	Harry Jones	
APPROVED BY		

FN = FIND NUMBER

CABLE ASSEMBLY, HANDAR 436 INCREMENTAL ENCODER F&P PRECIP. GAGE

SIZE	DATE	DRAWING NO.
C	1/11/85	D105-1W2-SD001
SCALE 1/1		SHEET 1 OF 1

WS FORM H-28 (7-77)

U.S. DEPARTMENT OF COMMERCE
NOAA
NATIONAL WEATHER SERVICE

ENGINEERING PROCESS REPORT

1. ORG	2. PAY PERIOD (Last day) YEAR	MONTH	DAY	3. STATION	REG.	4. AREA SECTOR	5. INITIALS	6. HOURLY SALARY	7. REPORTED BY:	8. GENERAL PURPOSE

SEQ	9. STATION	REG.	10. AREA SECT	11. CATEGORY PROGRAM	12. WORK TYPE	13. TOTAL – TIME (Hours) a RT	b NT	c TT	d MT	e OT	14. TRAVEL MILES	15. PER DIEM (Travel wh.$	16. COST CODE	17. COST (Dollars)	18. ORDER NUMBER	19 NOTES
1A				F & P	MOD											MOD # 7 F&P SERIAL #
1B																Date Modification completed
1C																
1D																
1E																
1F																
1G																
1H																
1I																
1J																
1K																
1L																
1M																
N				ADMIN.												FOR LEAVE ENTER WORK TYPE: LVA = Annual Leave; LVC = Compensatory Leave; LVH = Holiday; LVS = Sick; LVM = Military or Other
O				LEAVE												

COST CODES:
C = CONTRACTS
T = TRANSPORTATION OF THINGS
P = PURCHASED LOCALLY
G = GOVERNMENT FURNISHED
N = NONCAPITALIZED PROPERTY
M = CAPITALIZED PROPERTY

20. REMARKS

Blocks 1 through 10 must also be filled out.

Enter time required to complete Mod in Col. 13d (MT).

This Mod must be reported into the EMRS System before 30 days following completion of modification

WS FORM H-28 (7-77) SUPERSEDES WS FORMS H-12 AND H-15 WHICH ARE OBSOLETE AND EXISTING STOCKS SHOULD BE DESTROYED.

HYDROLOGIC GAGING MODIFICATION NOTE 8
(For Electronics Technicians)

SUBJECT	:	Installation of a Shaft Encoder to the Precipitation Gauge.
PURPOSE	:	To allow the LARC and ARC equipment to telemeter the F&P/Belfort precipitation gauge values.
EQUIPMENT AFFECTED	:	All F&P/Belfort telemetered precipitation gauges except Modification 7.
PARTS REQUIRED	:	One 436A incremental shaft encoder with bracket assembly kit,
MOD PROCUREMENT	:	All parts required to complete each modification will be shipped directly to the stations as an assembled kit.
SPECIAL TOOLS REQUIRED	:	None
TEST EQUIPMENT REQUIRED	:	.A Texas Instruments model 707 data terminal or a Handar 545A programming test set.
TIME REQUIRED	:	3.5 hours on site
EFFECT ON OTHER INSTRUCTIONS	:	None
CERTIFICATION	:	This modification was successfully tested for operational integrity at selected sites in the Eastern, Southern, and Western Regions.

General

This modification incorporates a direct gear drive coupling and bracket assembly between the 436A incremental shaft encoder and the gear drive of the precipitation gauge.

The precipitation gauge calibration procedures are not affected by this modification. Follow the maintenance schedule procedure in EHB-10, Section 4.2 when calibrating this gauge.

This modification does not affect the sites with Modification 7 installed.

Procedure

Familiarize yourself with the bracket construction, the part designation, and the bracket assembly installation, as shown in figures 1 and 2, before proceeding.

1. Bracket Mounting Procedure

   a. Remove the hood, collector, and lower case assembly from gauge and disconnect the battery leads.

   b. The shaft encoder bracket assembly comes preassembled and partially adjusted. The right angle bracket and the upper mounting clamp must first be removed from the encoder bracket assembly and attached separately to the gauge. The encoder bracket assembly is then mounted to the right angle bracket and upper mounting clamp and adjusted to mate with the gauge's gear drive using the following procedure. Remove the two 1/4-20 bolts from the bottom right-hand side of the weighing mechanism support scale (see figure 1). Install the right angle bracket, previously removed from the encoder bracket assembly, to the support scale using these same two bolts.

   C. Install the upper mounting clamp as follows:

      1) Remove the upper mounting clamp from the baseplate by removing only the outermost nut and washer from each of the two 2 1/2-inch capscrews.

      2) Remove the capscrew from the middle of the upper mounting clamp and loosen the double nuts enough to spread the clamps apart, approximately the width of the support scale rib. Install the upper mounting clamp in the opening at the top of the support scale rib, with one clamp on the inside and one on the outside of the rib. Finger-tighten the nuts holding the clamps to the rib, and replace the capscrew in the middle of the clamps.

   d. Install the encoder bracket assembly as follows:

      1) Before installing the encoder bracket assembly to the lower bracket and upper clamp, check that the encoder plate is centered and secure on the baseplate. Also check that the idler gear bracket is mounted flush against the front side of the encoder and that the two gears line up making a fairly loose, non-binding coupling. This is essential for proper gear alignment. Should the idler bracket and encoder clamp need adjustment, remove the encoder plate from the baseplate and slightly loosen the three flat head screws on the backside of the encoder plate. Then the encoder, idler bracket, and gears may be adjusted as required. Retighten the flat head

screws and remount the encoder plate, centering it on the baseplate.

2) Mount the encoder bracket assembly loosely to the lower bracket and upper clamp assembly as shown in figure 2.

3) Align the idler gear with the gauge spur gear by moving the encoder bracket assembly left or right as required.

4) Engage the idler gear with the gauge spur gear by adjusting the nuts holding the encoder bracket assembly to the upper clamp assembly. This gear engagement must be fairly loose, so as to make the lightest load possible on the gauge. If this adjustment fails to engage the idler gear with the gauge spur gear properly, fully loosen the upper clamp nuts to the end of the cap screws. Then loosen the encoder plate retaining screws and adjust the encoder plate up or down on the baseplate enough to allow the gear engagement. Final gear engagement must be made with the upper clamp bolts.

5) Tighten the upper clamp nuts and lower bracket socket head screws, located on the right angle bracket, and then recheck all gear alignments. Readjust as necessary to make the lightest load possible on the gauge.

e. When a site requirement is for a two-sensor configuration, use the figure 3 diagram to connect. If a sensor cable needs to be extended to complete the installation between the precipitation gauge and the LARC system, cut the cable provided with the LARC system and install the eight metal oxide varistors (MOV) provided with the kit (reference figure 4). Use figure 5 wiring table for the ARC system installation.

Ground the LARC system chassis directly to the earth electrode by using l/2-inch braided or copper strap.

f. Restore power to the precipitation gauge. Run a calibration check on the gauge and ensure that it is tracking correctly. This concludes installation of the 436A incremental shaft encoder and direct gear drive to the precipitation gauge. The precipitation gauge can now be reassembled.

2. Encoder Initialization

At this point, the precipitation gauge incremental shaft encoder has been connected to the LARC or ARC system. The system is now ready to accept a program. The LARC system can be programmed at the site or remotely, using a TI-707 KSR terminal. The ARC satellite can only be programmed at the site using a 545A programming test set. Refer to the Handar (reference page 3-37)

"Operating & Service Manual" for programming. The sensor tag is type 11 for an incremental shaft encoder.

a. Terminal hookup for a field site using a TI-707 KSR data terminal is as follows:

   1) Connect the modem cable provided with the LARC system between the connector labeled "Telephone" on the front of the LARC system and the jack in the rear, the TI-707 KSR data terminal, labeled "WALL."

   2) Open the LARC system and turn the power on. The LARC is now ready to accept the configuration program.

b. Program the precipitation gauge using the TI-707 KSR data terminal.

   1) Turn the TI-707 KSR data terminal power on and press the "CMD" key. Next, press the letter "D" on the keyboard. The word "DIAL" will be printed. Enter the telephone number of the LARC system. A simulated ring-in is required before the system will accept a program. This is done by pressing the switch labeled RING, located on the voice/modem board inside the LARC system. The prompt “I.D.” will then be printed. Enter the site identification code and press the "RTN" key. The system is now ready to be programmed.

   2) The 550A Hydrologger Manual should be referred to for in-depth programming information.

      Use attachments 1 and 2 as guidelines in programming the LARC system. The MIC or HIC should be consulted for their input as to what parameters to enter into the program.

   3) Check the operational integrity by placing a known calibration weight into the collector of the precipitation gauge. Then interrogate the gauge by calling and checking the current value logged by the program. The current value should be the same as the punched paper tape and the reading displayed on the code wheel of the gauge.

This completes the modification.

Reporting Modification to WSH Engineering Division

Target date for completing and reporting this modification is 30 days after receipt of the modification kit.

All completed equipment modifications shall be reported on the WS Form H-28 using equipment code LARC or ARC, as appropriate.

J. Michael St. Clair
Chief, Engineering Division

Attachments
Typical NWS LARC Programming Examples
Figures 1 through 5

P	ID	0000ABC1	Station I.D. numbcr
P	Station Time	01:21:53	Set clock to current time
P	Ca11 Mode	11	Modem mode, to or from 550A (provides CADAS format)
P	CADAS Baud (110/300)	110	110 Baud rate
P	Ncxt Call Time	On Limits	Dials out on limit
P	Call Interval	On Limits	Dials out on limit
P	Dump Numbcr of Scans	02	Transmits 2 scans of data
P	Ncxt Log Time	01:30	Data starts recording at 1:30
P	Log Interval	01:00	Records every hour thereafter
P	Tel #:Arca Code	O-001	Long distance call
P	Tel #:Local	555-1212	Dial telephone number 555-1212 (on limit)
P	Channel No.	01	Channel 1
PO1	Sensor Type	01	Sensor type 1 -- Precipitation, F & P Weighing Gauge (Encoder #l)
PO1	Value/Incrcmcnt	00.10	Level recorder in 0.10 inch increments
PO1	Current Value	05.20	Initial rain is 5.2 inches
PO1	Voice Code	66	Voice code 66, spoken vocabulary "T0TAL RAIN"
PO1	High Limit	No Limit	No limit set
PO1	Low Limit	No Limit	No limit set
PO1	Pos Diff Limit	01.00	550A dials out when precip reaches or exceeds 1 inch/hour
PO1	Neg Diff Limit	No Limit	No limit set
P	Channel No.	02	Channel 2
PO2	Sensor Type	02	Sensor type 2 -- Stage (Encoder #2 set at Limit #l)
PO2	Value/Increment	00.01	Level recorder in 0.01 foot increments
PO2	Current Value	07.55	Initial water level is 7.55 feet
PO2	Voice Code	63	Voice code 63, spoken vocabulary "LEVEL"
PO2	High Limit	10.00	550A dials out when Stage limit reaches or exceeds 10.00 feet
PO2	Low Limit	No Limit	No limit set
PO2	Pos Diff Limit	No Limit	No limit set
PO2	Neg Diff Limit	No Limit	No limit set
P	Channel No.	03	Channel 3
PO3	Sensor Type	02	Sensor type 2 -- Stage (Encoder #2 set at Limit #2)
PO3	Value/Incrcmcnt	00.01	Precipitation recorded in 0.01 inch increments
PO3	Current Value	07.55	Initial water level is 7.55 feet
PO3	Voice Code	63	Voice code 63, spoken vocabulary "LEVEL"
PO3	High Limit	20.00	550A dials out when Stage limit reaches or exceeds 20.00 feet
PO3	Low Limit	No Limit	No limit set
PO3	Pos Diff Limit	No Limit	No Limit set
PO3	Neg Diff Limit	No Limit	No limit set

Typical NWS LARC Programming Example

P	ID	1234ABCD	Station I.D. number
P	Station Time	01:45:42	Set clock to current time
P	Ca11 Mode	11	Modem mode, to or f corn 550A (provides CADAS format)
P	CADAS Baud (110/300)	110	110 Baud rate
P	Ncxt Cal1 Time	02:05	Dials out at 2:05
P	Call Interval	06:00	Dials out every six hours
P	Dump Numbcr of Scans	16	Transmits sixteen scans of data
P	Ncxt Log Time	02:00	Data starts recording at 2:05
P	Log Interval	00:15	Records every fifteen minutes thereaftcr
P	Tel #:Arca Code	0-000	Local call (no need to dial area code)
P	Tel #:Local	555-1212	Dial telephonc number 555-1212 (at 2:05)
P	Channel No.	01	Channel 1
PO1	Sensor Type	03	Sensor type 3 -- precipitation, accumulation
PO1	Valuc/Increment	00.01	Level recordcr in 00.01 inch increments
PO1	Current Value	27.37	Initial rain level is 27.32 inches
PO1	Voice Code	66	Voice code 66, spoken vocabulary “TOTAL RAIN”
PO1	High Limit	No Limit	No limit set
PO1	Low Limit	No Limit	No limit set
PO1	Pos Diff Limit	00.25	550A dials out when precip reaches or exceeds .25 inch/l5 minutes
PO1	Neg Diff Limit	No Limit	No limit set
P	Channel No.	02	Channel 2
PO2	Sensor Type	02	Sensor type 1 -- Stage (Encoder #l)
PO2	Value/Increment	00.01	Level recorder in 00.01 foot increments
PO2	Current Value	03.76	Initial water level is 3.76 feet
PO2	Voice Code	63	Voice code 63, spoken vocabulary “LEVEL”
PO2	High Limit	12.00	Stage limit set at 12.00 feet
PO2	Low Limit	No Limit	No limit set
PO2	Pos Diff Limit	00.25	550A dials out when level reaches or exceeds .25 feet/l5 minutes
PO2	Ncg Diff Limit	No Limit	No limit set
P	Channel No.	03	Channel 3
PO3	Sensor Type	04	Sensor Type 4 -- Differential precipitat ion
PO3	Value/Increment	00.01	Precipitation recorded in 00.01 foot increments
PO3	Current Value	00.00	Initial water level is 0,00 inches (no rain)
PO3	Voice Code	50	Voice code 50, spoken vocabulary “RAIN”
PO3	High Limit	00.50	550A dials out when precip exceeds .50 inch
PO3	Low Limit	No Limit	No limit set
PO3	Pos Diff Limit	No Limit	No limit set
PO3	Neg Diff Limit	No Limit	No limit set

Typical NWS LARC Programming Example

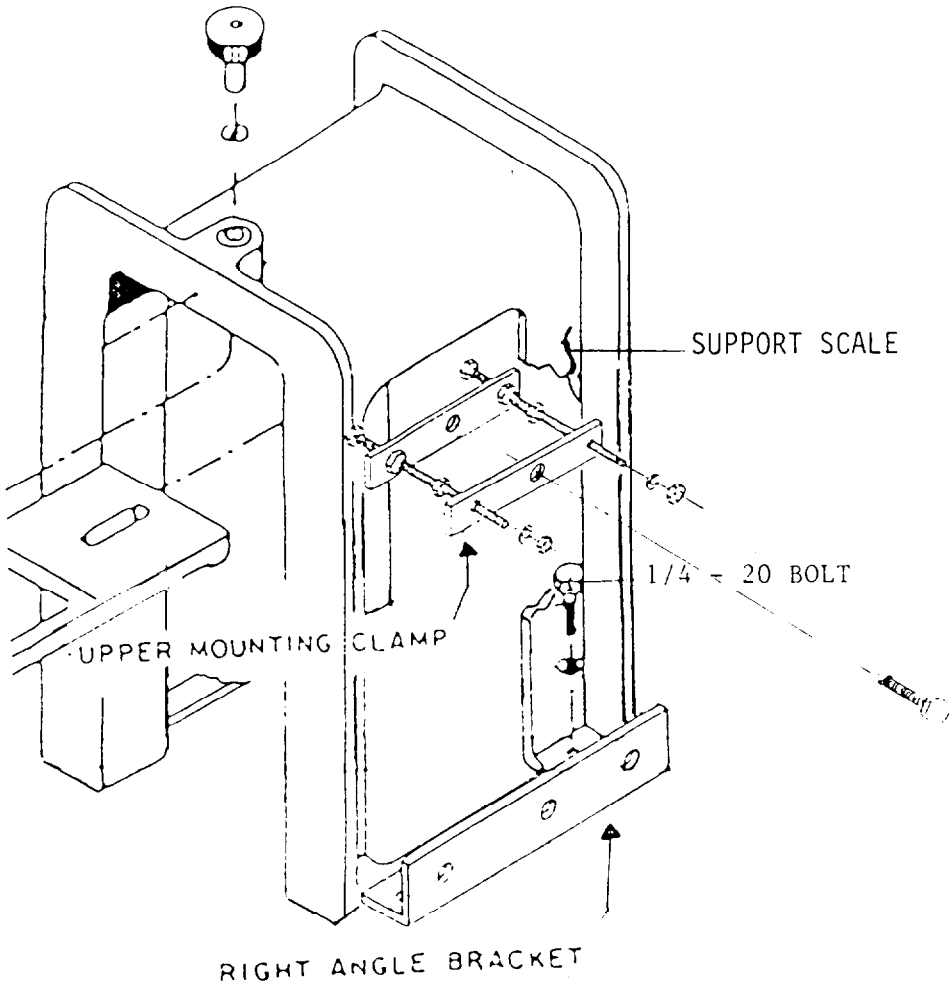
SUPPORT SCALE
1/4 - 20 BOLT
UPPER MOUNTING CLAMP
RIGHT ANGLE BRACKET

FIGURE 1

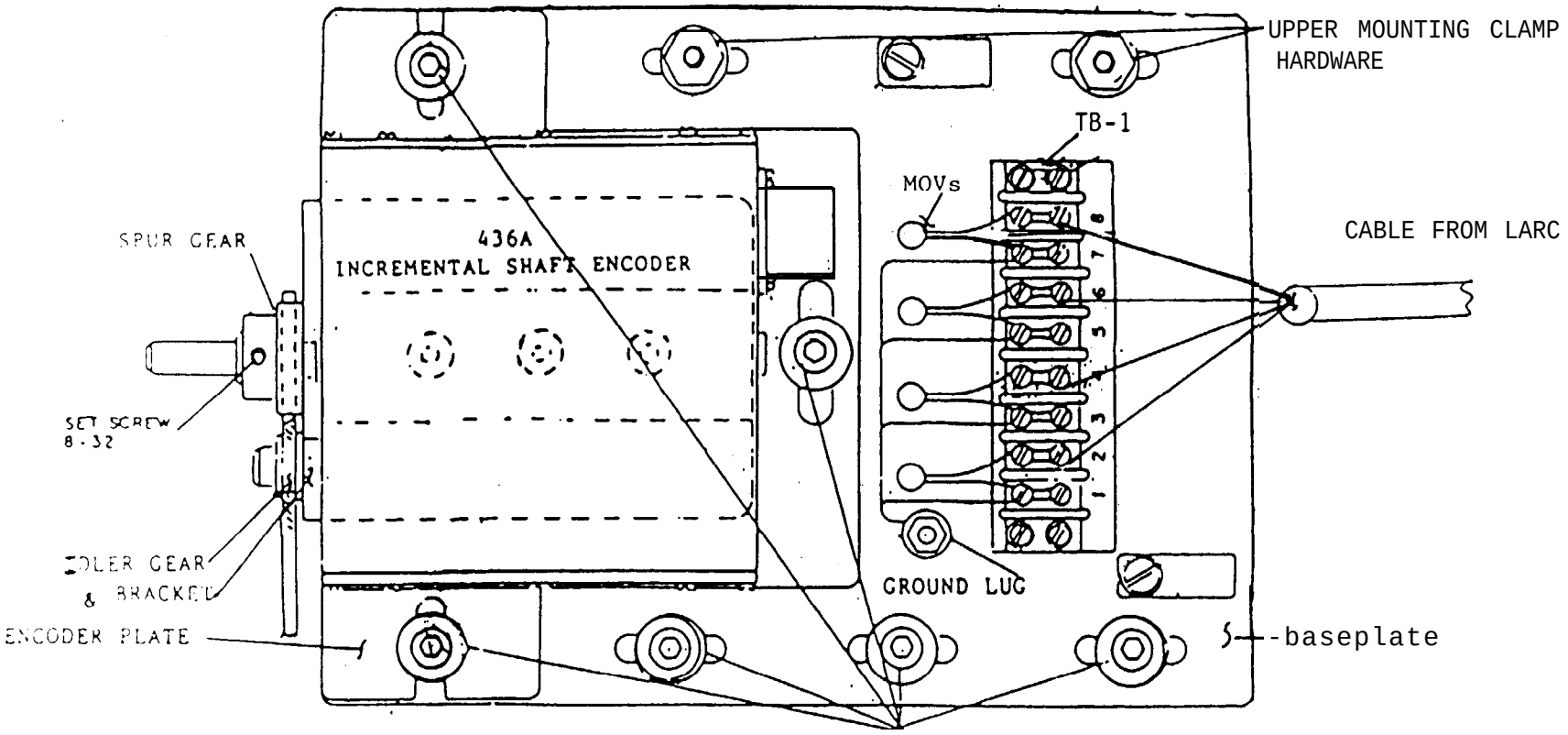

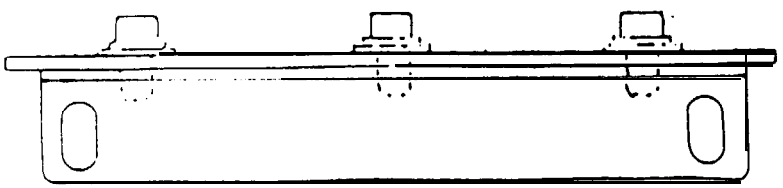

RIGHT ANGLE BRACKET

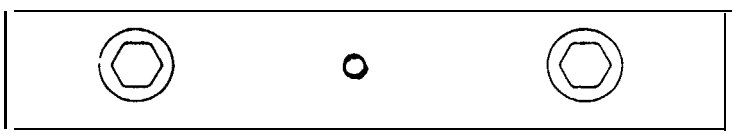

UPPER MOUNTING CLAMP ASSEMBLY

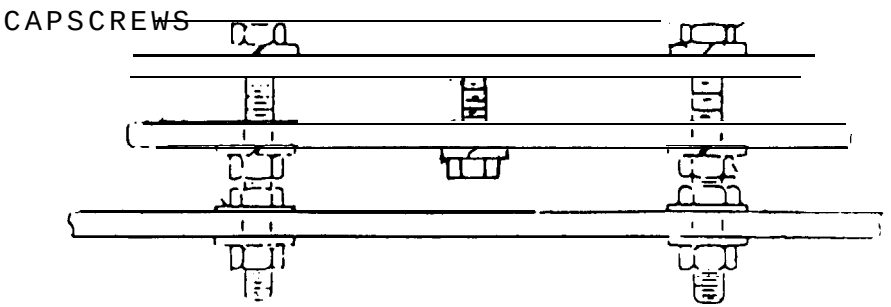

FIGURE 2

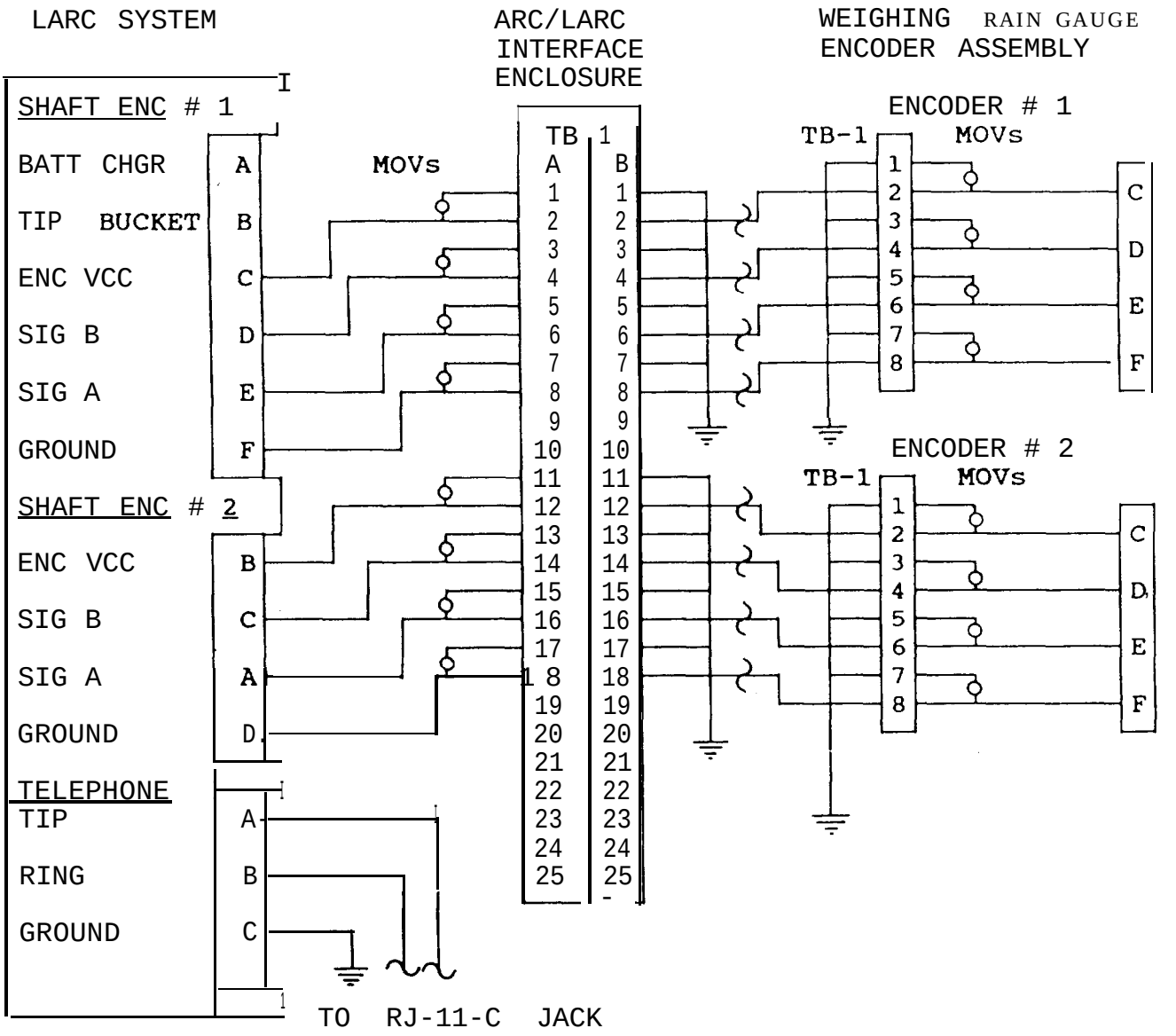
LARC SYSTEM
ARC/LARC INTERFACE ENCLOSURE
WEIGHING RAIN GAUGE ENCODER ASSEMBLY
SHAFT ENC # 1
BATT CHGR
TIP BUCKET
ENC VCC
SIG B
SIG A
GROUND
SHAFT ENC # 2
ENC VCC
SIG B
SIG A
GROUND
TELEPHONE
TIP
RING
GROUND
MOVs
TB 1
ENCODER # 1
TB-1
MOVs
ENCODER # 2
TB-1
MOVs
TO RJ-11-C JACK

FIGURE 3

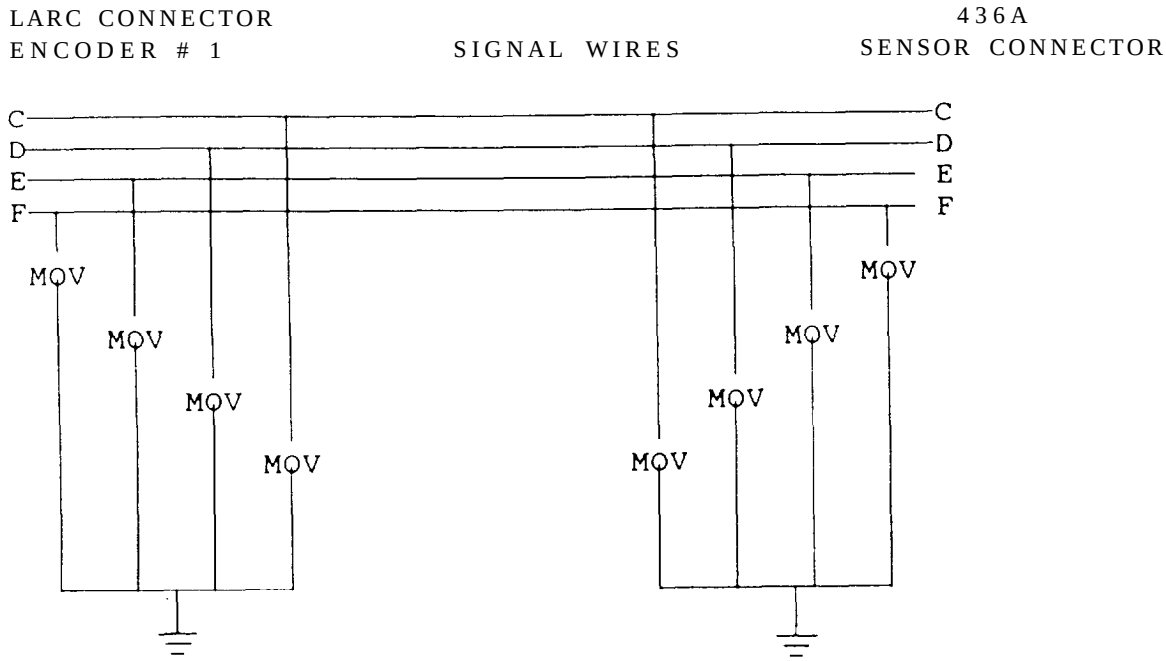

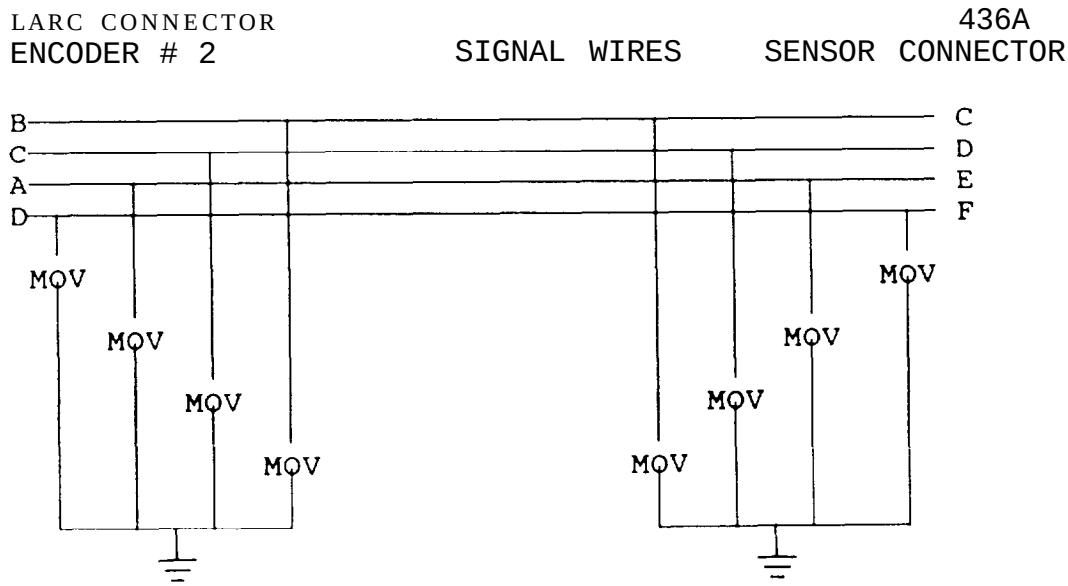

METAL Oxide Varistors (MOV) Connections for LARC Sensor Cables

Figure 4

INCREMENTAL ENCODER WIRING TABLE

For ARC System

436A Incrementa Encoder	TB-1 Encoder-Bracket		Incremental Encoder Board J1 Pin #	Incremental Encoder Interface Board Description of Input/Output
E-	-5-		-3-	Incremental Encoder Signal (01)
D-	-4-		-4-	Incremental Encoder Signal (02)
C-	-3-		-5-	Incremental Encoder SW'D 5V (10 KC)
F-	-6-		-6-	Incremental Encoder Ground

Figure 5

Engineering Division
W/OSO321:BGM

HYDROLOGIC GAUGING MODIFICATION NOTE 9
(for Electronics Technicians)

SUBJECT	:	Update of the Encoder Bracket Assembly for Telemetered Weighing Gauges
PURPOSE	:	Standardization of bracket assemblies on National Weather Service telemetered weighing rain gauges.
EQUIPMENT AFFECTED	:	All F&P/Belfort telemetered precipitation gauges
PARTS REQUIRED	:	Bracket assembly, drawing D925-3 DR001
MOD PROCUREMENT	:	All parts required to complete each modification will be shipped directly to the stations as an assembled kit.
SPECIAL TOOLS REQUIRED	:	None
TEST EQUIPMENT REQUIRED	:	A Texas Instruments model 707 data terminal or a Handar 545A programming test set
TIME REQUIRED	:	2.5 hours on site
EFFECT ON OTHER INSTRUCTIONS	:	Update replaces Modification Note 7, Section 3.1
CERTIFICATION	:	This modification was successfully tested for operational integrity at selected sites in the Eastern and Western Regions.

General

This modification updates the bracket assembly for the telemetered weighing rain gauge in Modification (Mod) Note 7, Section 3.1 to a Mod Note 8, Section 3.1 bracket assembly, The direct gear drive bracket assembly replaces the ladder chain configuration called for in Mod Note 7, Section 3.1. There are approximately 30 telemetering weighing gauges that require this update. The new bracket assembly with the direct gear drive meets al? of the existing calibration requirements for the National Weather Service telemetered weighing rain gauges.

Stations with Mod 7 installed may update their telemetered weighing rain gauge(s) to the Mod 8 configuration by requesting a bracket assembly. Call the Hydrology Systems Program Leader at FTS 427-7835.

Procedure

Procedure for updating the Mod 7 weighing gauge to a Mod 8 configuration is as follows:

1. Remove the Mod 7 bracket assembly and ladder chain from the weighing rain gauge.

2. Remove the incremental shaft encoder from the bracket.

3. Discard the bracket and the ladder chain.

4. Remove the retaining screws from the end plates of the incremental shaft encoder, and turn the end plates around so that the base feet are pointed inward. Reinstall the retaining screws. After the end plates are reinstalled onto the encoder, make sure the connector on the encoder is positioned so that when the encoder is mounted, the connector is closest to the base plate.

5. Remove the chain sprocket from the shaft on the incremental shaft encoder and the chain sprocket attached to the spur gear located on the input drive of the weighing rain gauge. Install the 48-tooth spur gear provided onto the shaft and tighten slightly.

6. Remove the three socket head cap screws holding the encoder plate onto the baseplate of the Mod 8 bracket assembly (refer to figure 1). Loosen the three B-32 flathead screws located on the encoder plate bracket enough so that the incremental shaft encoder can slide between the idler gear bracket and the encoder plate bracket. Align the incremental shaft encoder to the edge of the encoder plate. The idler gear bracket should be aligned so that the bracket touches the side of the incremental shaft encoder. Once the alignment is done, tighten the three 8-32 flathead screws. This will secure the idle gear bracket to the encoder plate. Install the encoder plate to the baseplate with the three socket cap screws removed earlier. Place the encoder plate even with the baseplate. Align the 48-tooth spur gear so that it is level with the center of the idler gear after alignment tightening. Turn the idler gear and check that the spur gear turns without any binding.

7. Follow the mounting procedure for installing the bracket assembly in Mod Note 8, Section 3.1.

Reporting Modification to WSH Engineering Division

Target date for completing and reporting this modification is 30 days after receipt of the bracket assembly. All completed equipment modifications shall be reported on the WS Form H-28, according to instructions contained in EHB-4, part 2, using equipment code F&P.

J. Michael St. Clair
Chief, Engineering Division

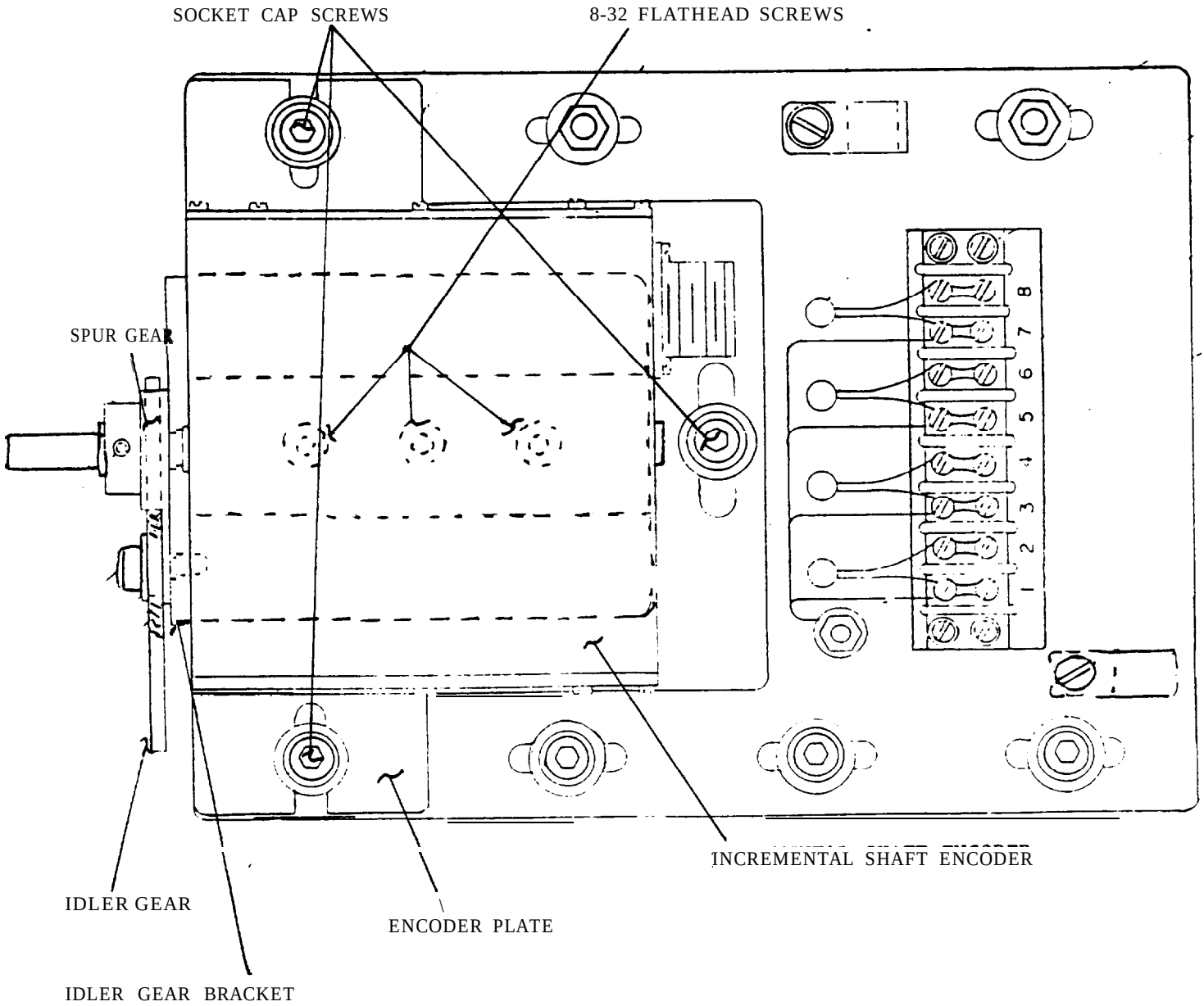
SOCKET CAP SCREWS
8-32 FLATHEAD SCREWS
SPUR GEAR
8
7
6
5
4
3
2
1
INCREMENTAL SHAFT ENCODER
IDLER GEAR
ENCODER PLATE
IDLER GEAR BRACKET

FIGURE 1

MODIFICATION INDEX - TIDE GAGING

Number	Date of Issue	Title

MODIFICATION INDEX
AUTOMATIC HYDROLOGIC OBSERVING SYSTEM (AHOS)

Number	Date of Issue	Title
1	September 9, 1977	Improving the DARDC Responder
2	October 20, 1978	Improving the DARDC Responder
5	December 23, 1985	EPROM Installation and Programming Instructions for the Handar 545A Programming Test Set
	April 10, 1986	Addendum to Modification Note 5
6	May 12, 1986	Installation of a 3.3K ohm resistor to the voice/modem board (550-6003), located in the LARC system
8	July 15, 1987	Signal Circuit Protector for Limited Automatic Remote Collector (LARC) and Automatic Remote Collector (ARC) Systems
9	April 25, 1988	Stand-Alone Installation for Limited Automatic Remote Collector (LARC) and Automatic Remote Collector (ARC) Systems

Items 3, 4, and 7 have been deleted.

U.S. DEPARTMENT OF COMMERCE
National Oceanic and Atmospheric Administration
NATIONAL WEATHER SERVICE

October 20, 1977

W5141/TD

TO: All NWS Regional Headquarters, Electronic Program Officers, and Electronics Technicians

FROM: J. M. St. Clair
Chief, Engineering Division

SUBJECT: Transmittal Memorandum for Engineering Handbook No. 10, Issuance 77- 4

1. Material Transmitted:

Engineering Handbook No. 10, Hydrologic Equipment, Section 3.3: Automatic Hydrologic Observing System (AHOS) Modification No. 1, Improving the DARDC Responder.

2, Summary:

Modification No. 1 consists of four discrete component changes to the B701 DARDC Responder. Implementation of these changes and those of Modification No. 2 (to follow -on in about six months), is to improve the performance of the DARDC system. Although aimed at the AHOS/T, some or all of the changes apply as well to the AHOS/S, DARDC Winds, LNB DARDC, and maintenance spares.

3. Effect on Other Instructions:

Certain changes in this modification require pen and ink corrections to pertinent drawings available to the Electronics Technicians. These are detailed specifically in the body of this modification. All drawings and diagrams to be issued from this office in the future will be corrected.

AHOS MODIFICATION NO. 1

(For Electronics Technicians)

SUBJECT : Improving the DARDC Responder

PURPOSE : Improve System ReliabiIity

EQUIPMENT AFFECTED : B701 DARDC Responder

PARTS REQUIRED : (1) A2 Translator Card (Model B) - (As Required)
(2) 3.9 Megohm Resistor - (All A8AA Cards)
(3) 1 mfd. Electrolytic Capacitor - (As Required)
(4) 1N4004 Silicon Diode - (All Solarex Model 435 Panels)

TIME REQUIRED : 1 Man-hour (average)

General. --During the past year the DARDC responder has undergone a comprehensive and intensive investigation by the OTS Test and Evaluation Division. Their recommendations have led to several improvement modifications that are expected to increase the overall performance reliability of the DARDC responder. Six different changes are involved in the improvement program but, because of an extended design and procurement period, all the components will not be available at the same time. Therefore, the six changes will be implemented in two overall modification actions, AHOS Mod. No. 1, discussed here, and AHOS Mod. No. 2, which will be available in about six months. The future Mod. No. 2 will consist of replacing the present Al card with a redesigned Al card and replacing the coupler 24-volt solenoid coil with a similar coil designed for 12-volt operation. The new Al card wiII feature greatly improved voltage regulation and provide enough current to operate the new 12-volt solenoid under any condition. It is also compatible with both the AHOS/T and the AHOS/S.

Although these modifications are entitled AHOS Mod. #1 and #2, all or some of the changes are applicable to all DARDC responders such as DARDC winds, LNB's, AHOS/S and T, maintenance spares, etc. Appropriate modifications shall be made to these systems so that all unreliable components will be deleted from service and destroyed.

Modification No. 1 Description.

(1) A2 Translator Card (Model B) - This card, recognized by its six test points, a jumper between test points 5 and 6, and six IC's, is estimated to be present in over

half of the DARDC's in use. The remainder use the unreliable Model A card, which has only four test points, no jumper, and seven ICs. This card will be replaced by the Model B. A schematic diagram of the A2 (Model B) card is shown as Figure 1. Determine the number of A2 (Model A) cards that are under your maintenance responsibility (including spares) and order from CLSC, through your Regional office, only enough Model B cards to replace them. Order them as nonstock items (NSI) for AHOS Modification No. 1. One old A2 'Model A) card is to be returned to your Regional office later for each Model B ordered.

(2). 3.9 Megohm Resistor (all A8AA cards) - This resistor will replace the 10 megohm resistor (R19) now in all A8AA 500 millisecond one-shot circuits. It has been found that in some A8AA cards, the time constant of the circuit has increased to as much as 1 second, due to variations in the tolerances of C17, R19, and U2. Since this one-shot circuit dumps old information before the card accepts freshly-punched gage data, a combination of increased dumping time and a gage contact with a short closure interval can result in lost data. The average telemetering contact closure time of Fischer & Porter gages is between 2 and 3 seconds.

(3) 1 mfd. Electrolytic Capacitor (all A8AA cards, as required) - Some of the earlier A8AA cards were distributed with electrolytic capacitor Cl8 (1 mfd.) inserted with reversed polarity. This can cause the four-second one-shot circuit to be erratic and interfere with the read-in of gage information. An incorrectly inserted capacitor should be replaced with a new one installed correctly. Figure 2 shows the location of capacitor Cl8 and also resistor R19. Figure 3 is a schematic of the A8AA card. Determine the number of A8AA cards under your maintenance responsibility and order the required number of 3.9 megohm resistors and 1 mfd electrolytic capacitors from your Regional office. Remember that all R19 resistors (10 megohms) but only reversed polarity 1 mfd. capacitors are to be changed.

(4) 1N4004 Silicon Diode (all Model 435 Solarex Panels) - A silicon diode (1N4004 or equivalent) has been made available with this modification to be inserted in series with the positive lead from the Solarex Model 435 solar panel (WS Stock No. P551) in the direction of solar panel current flow. This will give an automatic 0.6 volt drop in the circuit keeping the maximum battery voltage at about 14 volts. It also prevents back current flow from the battery at night should the Solarex Model 435 germanium diodes become shorted. We have no definite proof of these problems but we believe that in some geographical areas Gel Cell batteries are being overcharged by Solarex 435 panels and, also, some batteries are draining through them at night. Figure 4 shows how the diode is to be installed in the DARDC instrument cabinet. NOTE: Spectrolab solar panels (P550) have a well-regulated voltage and do not require installation of this diode. A recent CLSC Stock Change for the P551 solar panel resulted in replacing the Solarex Model 435 panel with the Solarex Model 1270 panel. The larger new panel (13" x 14" compared to TO" x 12" for the 435)

produces over twice the power at a regulated 13.6 volts. An external series diode is not needed nor desirable with this panel, since its 0.6 volt drop in series with the regulated 13.6 volts would lower the charging voltage to 13.0 volts, too low for effective charging: 13.5 volts is the ideal float charge for the Gel-Cell battery. Determine how many Model 435 Solarex panels you are responsible for and order enough diodes from your Regional office to cover them.

PROCEDURE:--

1. Replace an existing A2 (Model A) card with an A2 (Model B) card. Return all replaced Model A cards to your Regional office. It is intended that all DARDC responders be free of Model A cards. All Model A cards are to be replaced; don't save any.

2. 3.9 Megohm Resistor (all A8AA cards) - Replace the 10 megohm resistor R19 with a 3.9 megohm resistor. The following method is suggested:

   (a) Locate R19 (10 megohms) on the A8AA card by referring to Figures 2 and 3. (NOTE - Locate Cl8 at the same time and determine if its polarity is reversed).

   (b) Flake off the conformal coating on R19 by using a soldering iron and carefully scraping with a knife.

   (c) Clip the resistor from the board leaving as much of its leads as possible.

   (d) Spot clean the affected area with isopropyl alcohol.

   (e) Solder in the replacement 3.9 megohm resistor.

   (f) Check the board for proper operation.

   (g) If the board checks OK apply a high-dielectric moistureproof coating to the repaired part. Obtain the coating from CLSC (WS S/N 052-L-1) or purchase locally. NOTE: If the cut leads are too short for practical repair remove the coating from the resistor area on the back side of the board and replace the complete resistor.

   Change the value of R19 to 3.9 megohms on all A8AA diagrams on hand. This includes AHOS Maintenance Note No. 1(6/24/76) and the new FOMMS Manual for DARDC (Model B) Pages 7-153 and 7-162.

3. 1 mfd. Electrolytic Capacitor (as required) - If Cl8 polarity is reversed replace the capacitor with a new one using the procedure described above. Be sure to check the board for operation before applying moistureproof coating. Change the polarity of Cl8 on the A8AA drawing attached to AHOS Maintenance Note No. 1 (6/24/76) The attached A8AA drawing and the new FOMMS Manual drawing are correct

4. Solarex Model 432 Solar Panel P551) - Install a 1N4004 (or equivalent) silicon diode in series with the solar panel positive lead to the battery power supply in the following manner. (Refer to Figure 4):

   (a) In the DARDC instrument cabinet remove a spare DARDC J5 lead from TB4B-21. This terminal should now be unoccupied.

   (b) Remove the solar panel positive lead from TB4A-22 and connect it to TB4A-21.

   (c) Connect the diode between TB4A-21 and 22 with its anode on 21 and cathode on 22.

   (d) Correct all drawings you may have referring to this connection.

   NOTE: The Central Logistics Supply Center is now stocking the Solarex Model 1270 panel under the P551 stock number in place of the Model 435. This panel is larger (13" x 14") than the Model 435 (10" x 12"), produces twice the power (8 watts peak), is Zener - regulated at 13.6 volts, and does not require the 1N4004 series diode. The Spectrolab panel (P550) also does not require this diode.

This completes AHOS Modification No. 1. Enter this mod. on EMRS Form H-28 and include the system description such as AHOS/T, AHOS/S, ASOSW for DARDC Winds, LNB, maintenance spare, etc. Also enter the system serial number, except for maintenance spares which have no serial numbers.

AHOS Modification No. 2 involving a new improved A1 card and replacement of the 24-volt coupler solenoid with a 12-volt solenoid will be made available in about six months.

Attachments: Figure 1, Schematic of the A2 (Model B) Card
Figure 2, Location of C18 and R19 on A8AA Card
Figure 3, Schematic of the A8AA Card
Figure 4, 1N4004 Diode Installation

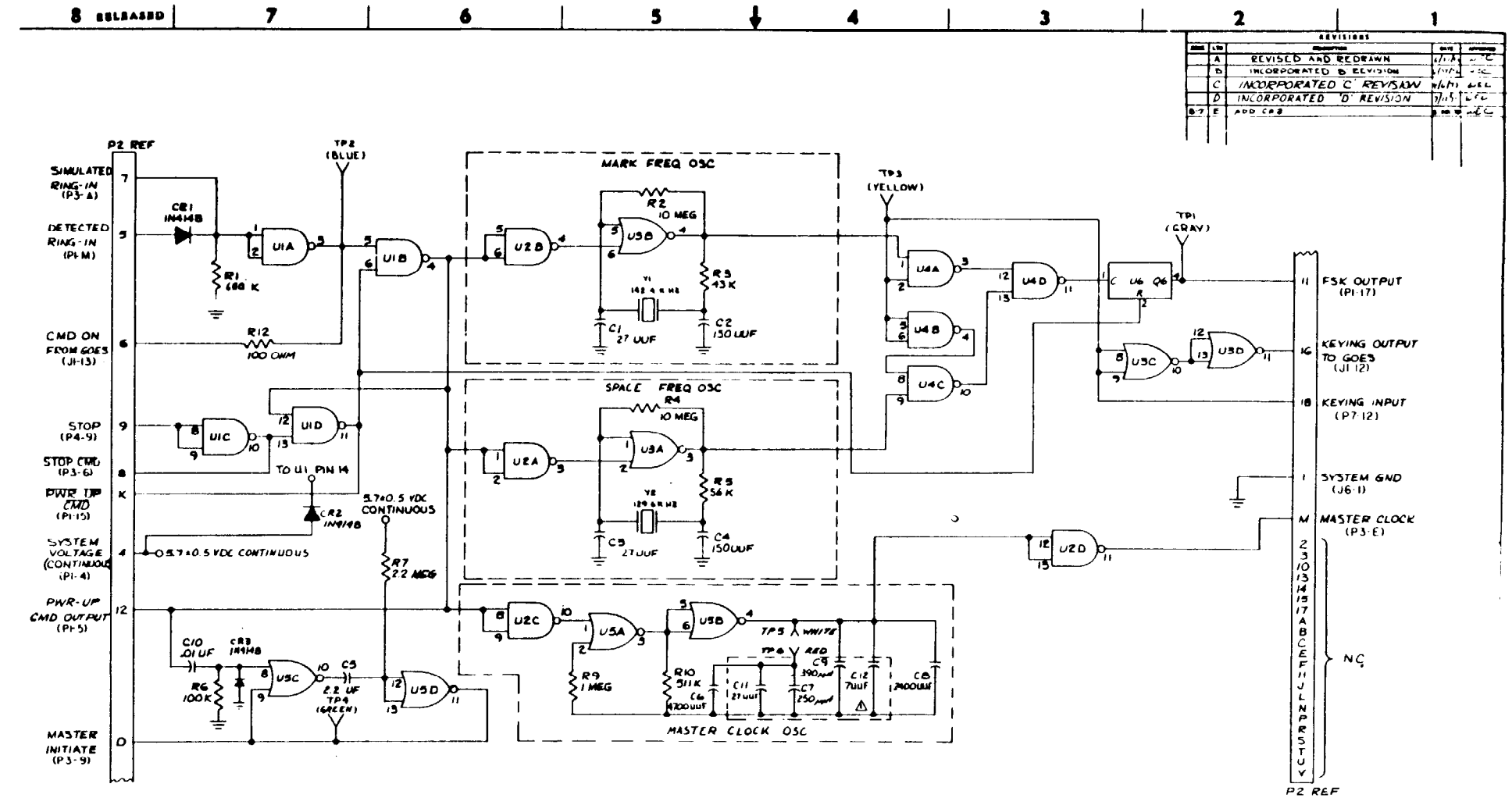

FIGURE 1

NOTES: UNLESS OTHERWISE SPECIFIED.

CARD NO 55A769
REV DC

-1 SCHEMATIC, INITIATOR PWB (A2)

DORSETT ELECTRONICS

SCHEMATIC INITIATOR PWB (A2)

D 07618 85A407

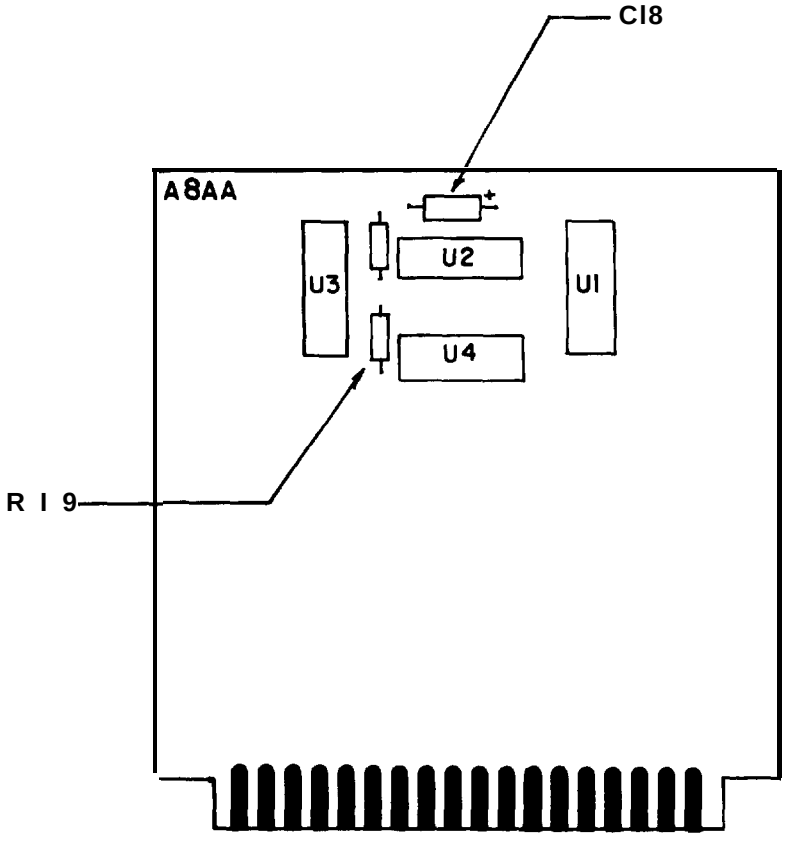

DRAWING-SHOWING LOCATION OF CI8 AND RI9 ON ABAA CARD

FIGURE 2

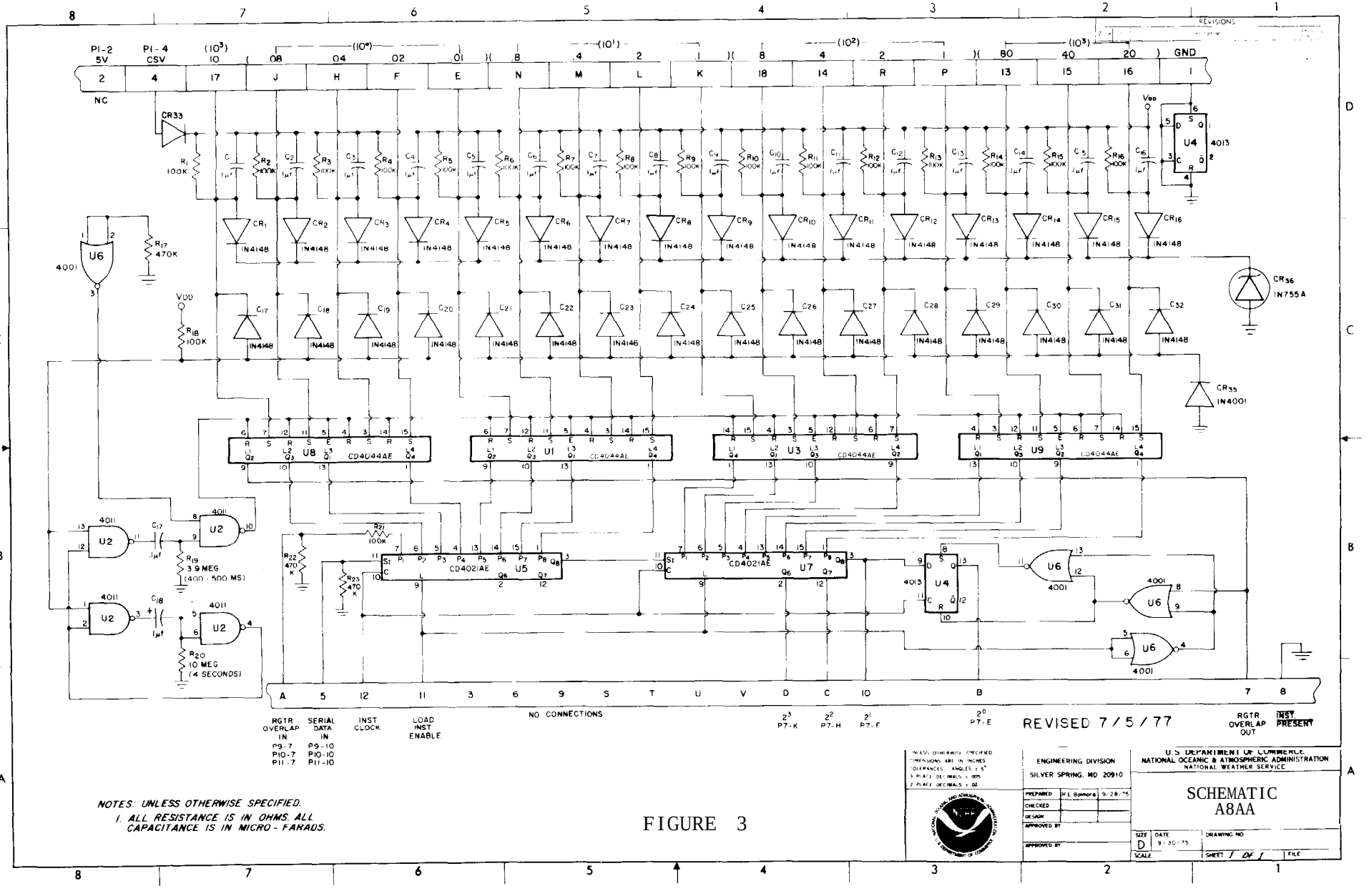
P1-2 5V
P1-4 CSV
NC
GND
NO CONNECTIONS
RGTR OVERLAP IN
SERIAL DATA IN
INST CLOCK
LOAD INST ENABLE
RGTR OVERLAP OUT
INST. PRESENT
REVISED 7/5/77
ENGINEERING DIVISION
SILVER SPRING, MD 20910
U.S. DEPARTMENT OF COMMERCE
NATIONAL OCEANIC & ATMOSPHERIC ADMINISTRATION
NATIONAL WEATHER SERVICE
SCHEMATIC
A8AA
NOTES: UNLESS OTHERWISE SPECIFIED.
1. ALL RESISTANCE IS IN OHMS. ALL CAPACITANCE IS IN MICRO-FARADS.

FIGURE 3

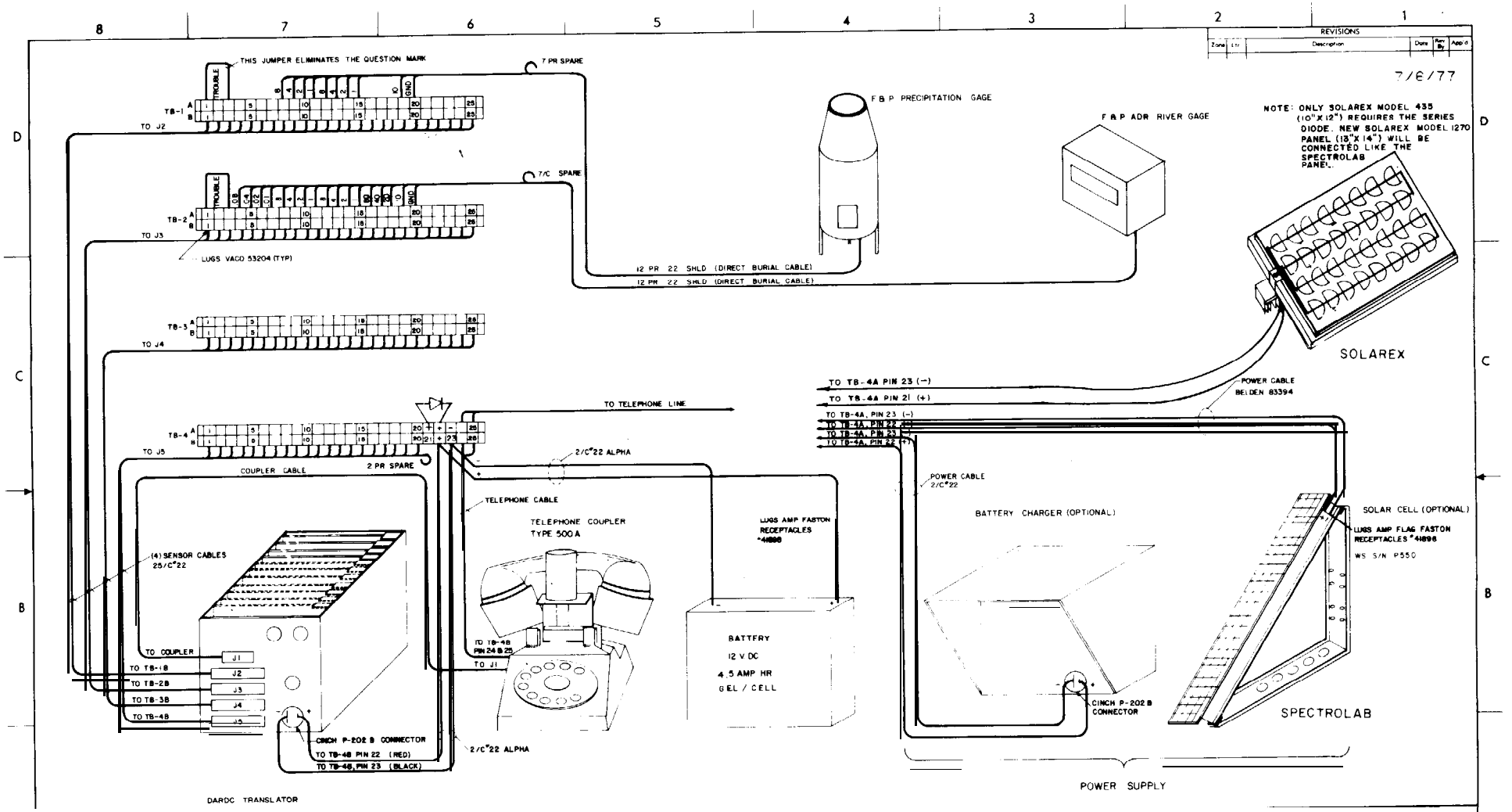
THIS JUMPER ELIMINATES THE QUESTION MARK
TROUBLE
TB-1
TO J2
7 PR SPARE
TB-2
TO J3
7/C SPARE
LUGS VACO 53204 (TYP)
TB-3
TO J4
TB-4
TO J5
COUPLER CABLE
2 PR SPARE
TO TELEPHONE LINE
2/C#22 ALPHA
TELEPHONE CABLE
TELEPHONE COUPLER TYPE 500 A
TO TB-4B PIN 24 & 25
TO J1
LUGS AMP FASTON RECEPTACLES #41898
BATTERY 12 V DC 4.5 AMP HR GEL / CELL
(4) SENSOR CABLES 25/C#22
TO COUPLER
J1
J2
J3
J4
J5
TO TB-1B
TO TB-2B
TO TB-3B
TO TB-4B
CINCH P-202 B CONNECTOR
TO TB-4B PIN 22 (RED)
TO TB-4B, PIN 23 (BLACK)
2/C#22 ALPHA
DARDC TRANSLATOR
F & P PRECIPITATION GAGE
F & P ADR RIVER GAGE
12 PR 22 SHLD (DIRECT BURIAL CABLE)
12 PR 22 SHLD (DIRECT BURIAL CABLE)
NOTE: ONLY SOLAREX MODEL 435 (10"X12") REQUIRES THE SERIES DIODE. NEW SOLAREX MODEL 1270 PANEL (13"X 14") WILL BE CONNECTED LIKE THE SPECTROLAB PANEL.
SOLAREX
TO TB-4A PIN 23 (-)
TO TB-4A PIN 21 (+)
TO TB-4A, PIN 23 (-)
TO TB-4A, PIN 22 (+)
TO TB-4A, PIN 23 (-)
TO TB-4A, PIN 22 (+)
POWER CABLE BELDEN 83394
POWER CABLE 2/C#22
BATTERY CHARGER (OPTIONAL)
CINCH P-202 B CONNECTOR
SOLAR CELL (OPTIONAL)
LUGS AMP FLAG FASTON RECEPTACLES #41898
WS S/N P550
SPECTROLAB
POWER SUPPLY
REVISIONS
Zone | Ltr | Description | Date | Rev By | App'd
7/6/77
UNLESS OTHERWISE SPECIFIED DIMENSIONS ARE IN INCHES
TOLERANCES ANGLES ± 5°
1 PLACE DECIMALS ± .005
2 PLACE DECIMALS ± .01
ENGINEERING DIVISION
SILVER SPRING, MD. 20910
PREPARED
CHECKED
DESIGN
APPROVED BY
APPROVED BY
U.S. DEPARTMENT OF COMMERCE
NATIONAL OCEANIC & ATMOSPHERIC ADMINISTRATION
NATIONAL WEATHER SERVICE
DARDC INTERCONNECTION WIRING DIAGRAM FOR PRECIPITATION & RIVER GAGES
SIZE D
DATE 2/15/74
DRAWING NO
SCALE
SHEET
FILE

FIGURE 4

U.S. DEPARTMENT OF COMMERCE
National Oceanic and Atmospheric Administration
NATIONAL WEATHER SERVICE
Silver Spring, Md. 20910

November 27, 1978

W514

TO: All NWS Regional Headquarters, Area Electronic Supervisors, and Electronics Technicians

FROM: OA/W51- J.M. St. Clair

SUBJECT: Transmitttal Memorandum for Engineering Handbook No. 10, Issuance 78-8

1. Material Transmitted:

Engineering Handbook No. 10, Hydrologic Equipment, Section 3.3; Automatic Hydrologic Observing System (AHOS) Modification No. 2, Improving the DARDC Responder.

2. Summary:

Modification No. 2 consists of three component changes to the B701 DARDC Responder, i.e., translator and coupler. Although primarily aimed at the AHOS/T, some or all of these changes apply as well to the AHOS/S, DARDC Winds, LNB DARDC, and maintenance spares.

The Engineering Division will follow implementation progress of this modification via the EMRS system as each El Tech files his mod completion report on WS Form H -28.

This modification completes the AHOS improvement program recommended by the OTS Test and Evaluation Division, to eliminate the identified problems existing in the AHOS System.

3. Effect on Other Instructions:

Pen and ink changes to DARDC Manuals and drawings are detailed specifically in the body of this modification. Updated FOMM information will be available in the near future.

Engineering Division
W514

October 20. 1978

AHOS MODIFICATION NO. 2
(For Electronics Technicians)

SUBJECT : Improving the DARDC Responder

PURPOSE : Improving AHOS System Reliability

EQUIPMENTAFFECTED: B701 DARDC Responder

PARTS REQUIRED : (1) Redesigned A1 Card - (All Translators)
(2) 12-Volt Coupler Solenoid - (All DARDC Couplers)

TIME REQUIRED : 1/2 Work-hour, on-site (average)

GENERAL:- The three component changes in this modification and those of DARDC Modification No. 1, issued October 20, 1977, complete the AHOS improvement program recommended by the OTS Test and Evaluation Division.

Descriptions of the three component changes comprising Modification No. 2, follow:

(1) Redesigned Al Card (all Translators) - This card (Rev. A1-Figure 1) is completely redesigned and features greatly improved voltage regulation, higher output signal level, and ability to drive the new 12-volt DARDC coupler solenoid that replaces the present 24-volt unit. Another improvement is its ability to drive the DCPRS (GOES) radio transmitter directly, thereby eliminating the specially modified Al card presently required for the AHOS/S systems.

(2) Coupler Solenoid, 12-volt Coil (all DARDC Couplers) - This new solenoid coil, designed for 12 volts dc, eliminates past marginal coupler performance because it has a much greater pull than the present 24-volt coil. Although the DARDC responder draws more current with this coil for the first half second of the interrogation cycle, a solar-powered battery has no problem handling this power increase. Since the solenoid armature is the same for both coils, only the coil will be changed. Figure 3 is an exploded view of the coupler; Figure 2 is a revised coupler parts list.

(3) Removal of Solenoid Actuator Bar Pads (all DARDC Couplers) - The actuator bar pads are critical items when the 24-volt solenoid is used with the coupler. If they are too thin the bar may sit so low on the telephone receiver buttons that the 24-volt solenoid may not have enough strength to lift it off the buttons. If the pads are too thick there may not be enough clearance to enable the buttons to put the phone into operation every time when called. With the new 12-volt coil the pads are not to be used and must be discarded. But, the coil spring around the solenoid armature must be left in place. Figure 2 is a revised coupler parts list and Figure 3 is an exploded view of the coupler

showing the changes to be made.

Although not a part of this AHOS modification, some instances have been observed where the coupler failed to hang up the phone completely after an interrogation. As a result the line remains busy and cannot be called. The problem is due to stiff hangup buttons on the phone which prevent the coupler bar from getting the phone "on hook." The condition is generally intensified during cold weather. A phone company serviceman can make a rather simple adjustment by bending a spring retaining arm inside the phone which eases the spring tension on the phone hangup buttons.

PROCEDURE:-

A. Requisition of Parts:

(1) Determine the number of A1 cards and solenoids in use in your maintenance area, including AHOS/S and T, DARDC Winds, LNBs and maintenance spares.

(2) Fill out a Stores Requisition (NOM Form 37-4) for your required number of A1 cards and solenoids. (See attached requisition example.) NOTE: Do not order CLSC Stock Items on this requisition. Also, there is no object class required on the cost accounting code.

(3) Don't send the requisition to CLSC, instead send your requisition for processing and quantity control to:

NOAA-National Weather Service
Engineering Division, W5141
8060-13 Street, RM 326
Silver Spring, Md. 20910
Attn: Thomas Davis

B. Installation of Parts:

(1) Redesigned A1 Card. This card (Figure 1) is a direct replacement for the existing A1 card in all DARDC translators. The new A1 card can be distinguished from the old card by the absence of the blue reed relay on the right-hand side of the new card. Replace the old A1's in all your translators (including spares) with redesigned A1 cards and return all replaced A1's to your regional office on a one for one basis (one old A1 returned for one redesigned A1 installed.) Since old cards will not handle the new coupler's current demand, we want them out of the program -100%.

(2) Coupler Solenoid, 12-Volt Coil, Figures 2 & 3).

(a) Exchange the present 24-volt coil with the new 12-volt coil (Guardian T12 X 19, 12V dc). First, unsolder the two black coil leads from the coupler's

terminal strip and pull the leads free, then loosen the solenoid retaining nut and remove the coil from the armature assembly. Second, install the 12-volt coil using the same armature assembly (new and old armatures are identical) and resolder the coil leads to the coupler terminal strip. Observance of polarity is not necessary. Discard the old 24-volt coil and new armature assembly. NOTE: Be sure that the armature spring (#19) remains in place.

(b) Remove and discard the cushioning pad (or pads) from the actuator bar. This insures adequate clearance, allowing the telephone to be put in ON-LINE condition when interrogated. Be sure to remove all traces of adhesive from the bar.

(c) Make appropriate changes to the coupler drawing and parts list in the DARDC Manual, Pages 5-61/5-62 and in the FOMM Manual Page 7-229.

C. Report Completion of Modification No. 2: Doing this mod is only part of the job. It must also be recorded as being done. Enter the completion of this mod on WS Form H-28 according to the attached instructions. Faithfully reporting each site's completion allows us to determine how much this mod has improved the operation of AHOS - that's the bottom line payoff.

Implementation of the above changes completes AHOS Modification No. 2.

Attachments: Figure 1 - Redesigned Al Card
Figure 2 - Revised Coupler Parts List
Figure 3 - Exploded View of Coupler
Figure 4 - Example Stores Requisition
EMRS Form H-28 and Reporting Instructions

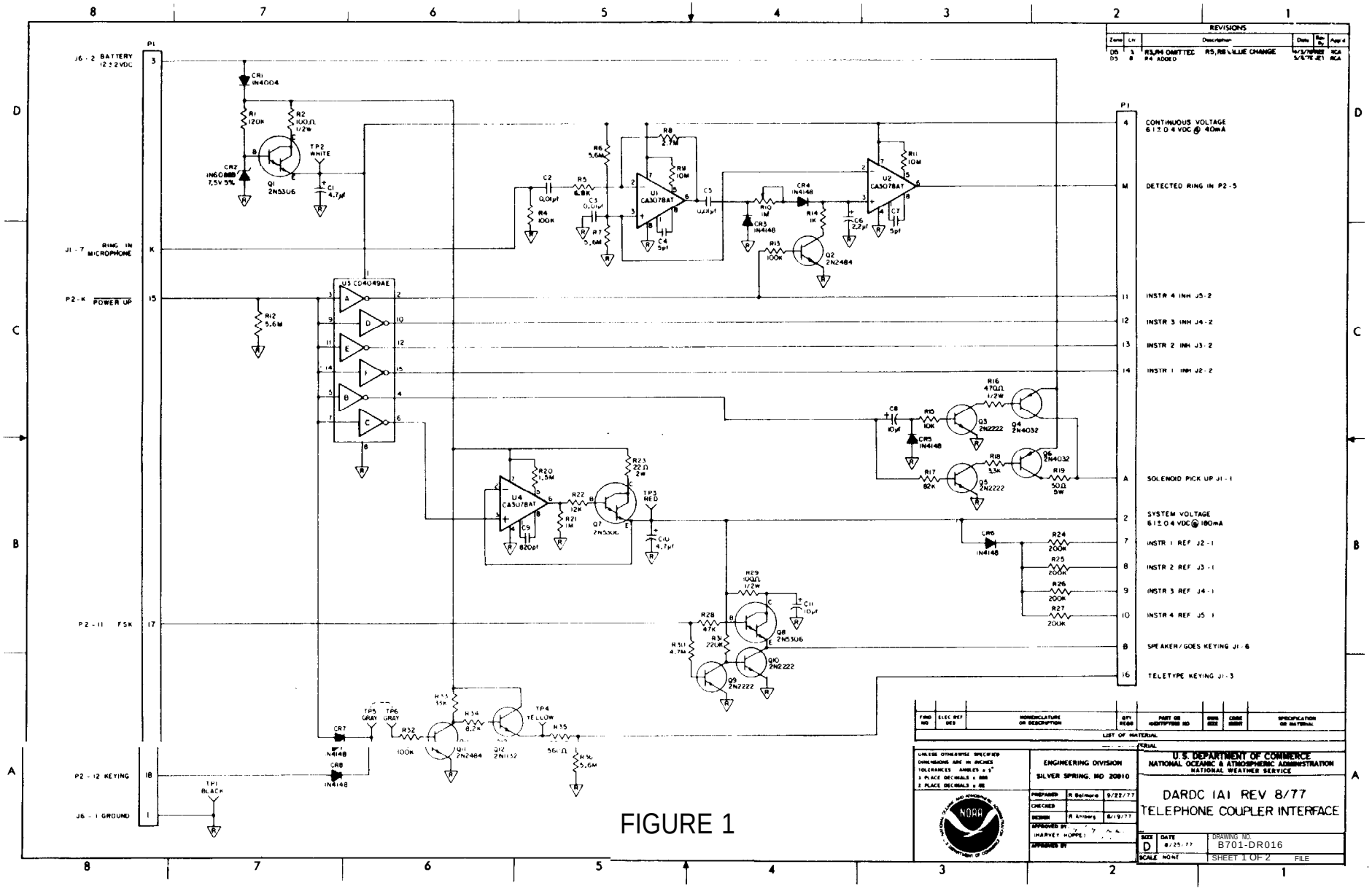
REVISIONS
J6 - 2 BATTERY 12 ± 2 VDC
J1 - 7 RING IN MICROPHONE
P2 - K POWER UP
P2 - 11 FSK
P2 - 12 KEYING
J6 - 1 GROUND
CONTINUOUS VOLTAGE 6.1 ± 0.4 VDC @ 40mA
DETECTED RING IN P2 - 5
INSTR 4 INH J5 - 2
INSTR 3 INH J4 - 2
INSTR 2 INH J3 - 2
INSTR 1 INH J2 - 2
SOLENOID PICK UP J1 - 1
SYSTEM VOLTAGE 6.1 ± 0.4 VDC @ 180mA
INSTR 1 REF J2 - 1
INSTR 2 REF J3 - 1
INSTR 3 REF J4 - 1
INSTR 4 REF J5 - 1
SPEAKER/GOES KEYING J1 - 6
TELETYPE KEYING J1 - 3
U3 CD4049AE
U1 CA3078AT
U2 CA3078AT
U4 CA3078AT
Q1 2N5306
Q2 2N2484
Q3 2N2222
Q4 2N4032
Q5 2N2222
Q6 2N4032
Q7 2N5306
Q8 2N5306
Q9 2N2222
Q10 2N2222
Q11 2N2484
Q12 2N1132
TP1 BLACK
TP2 WHITE
TP3 RED
TP4 YELLOW
TP5 GRAY
TP6 GRAY
LIST OF MATERIAL
ENGINEERING DIVISION
SILVER SPRING, MD 20910
U.S. DEPARTMENT OF COMMERCE
NATIONAL OCEANIC & ATMOSPHERIC ADMINISTRATION
NATIONAL WEATHER SERVICE
DARDC IAI REV 8/77
TELEPHONE COUPLER INTERFACE
DRAWING NO. B701-DR016
SHEET 1 OF 2
SCALE NONE

FIGURE 1

Item	Description	Reference
1	Nut, Hex, Plain, Cres, #6-32 MS 35649-64	
2	Washer, Split Ring, Cres #6-32 MS 35338-136	
3	Screw, 6-32 X 5/16	
4	Bracket, Microphone Mounting (07618)	
6	Microphone, 67 X 195, LaBarge	MK1
7	Pin, Spring, 1/8 Dia X 1 1/2 MS 171538	
8	Bar, Actuator (07618)	
9	Solenoid, 12V dc, Guardian T12 X 19	L1
10	Muff, Speaker, DC-102A, Novation	LS1
11	Muff, Blank, DC-102A, Novation	
12	Strain Relief, 6P-4, Hayman	
13	Diode, 1N4004, Motorola	CR1
14	Screw, FIL HD, #6-32 X 7/16, MS 35275-229	
15	Terminal Strip, 3006, H. H. Smith	TS1
16	Bracket, Cup (07618)	
17	Assembly, Coupler Bracket (07618)	
18	Adhesive, Pliobond, Goodyear	
19	Spring (07618)	

Changed 7 June 1978

(No. 5 Deleted)

Figure 2

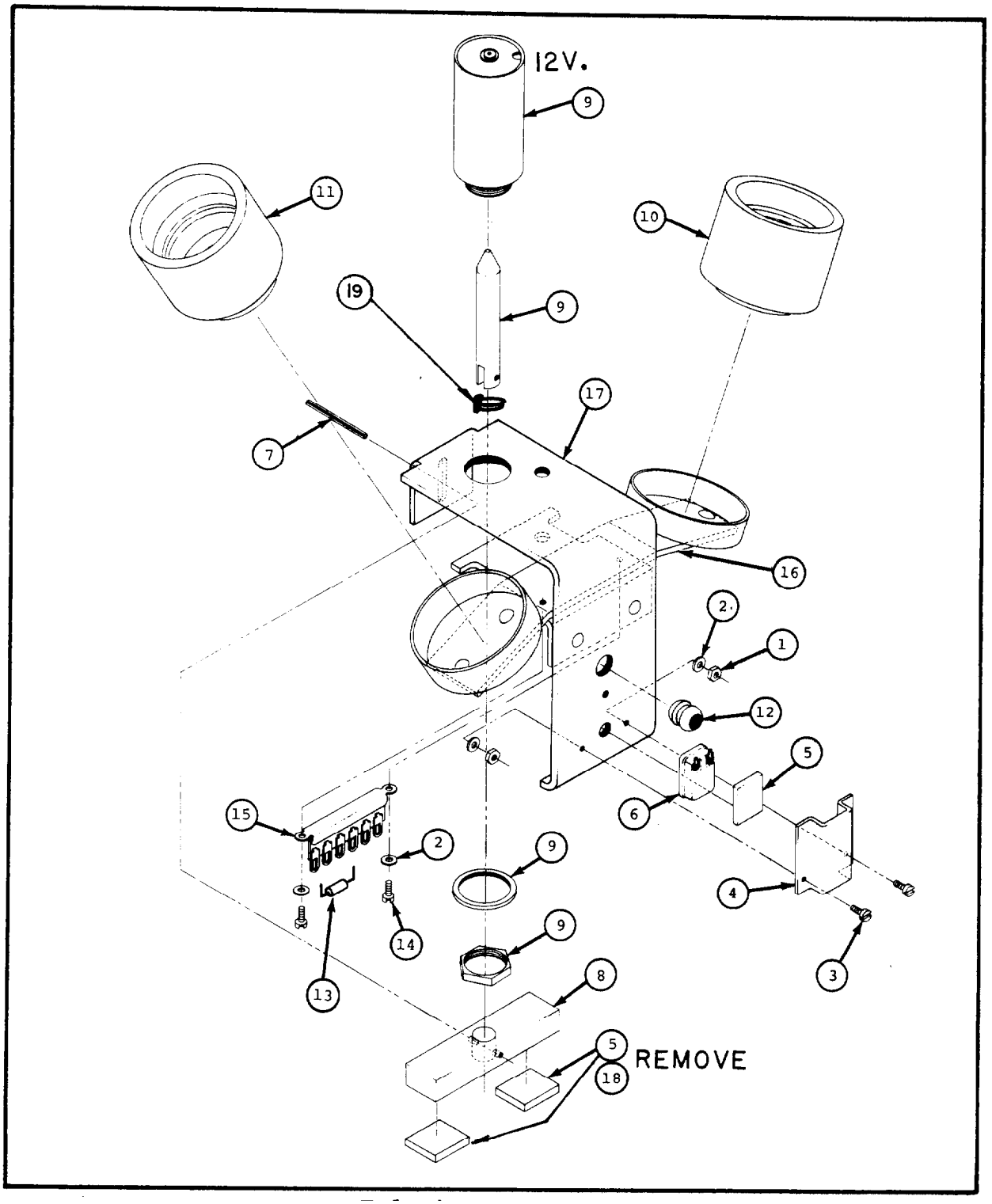

FIGURE 3 Telephone Coupler, Exploded View

NOAA FORM 37-4
(11-73)

U. S. DEPARTMENT OF COMMERCE
NATIONAL OCEANIC AND ATMOSPHERIC ADMINISTRATION

REQUISITION NUMBER (Leave blank)

STORES REQUISITION

☐ Regular ☒ Special ☐ Emergency ☐ Shipping Request

FROM: NAME OF OFFICE	ORGANIZATION CODE	DATE OF REQUISITION
WSFO, Great Falls, MT.	W40950	10/20/78

TO: SUPPLY OFFICE AT
Central Logistics Supply. Kansas City. Mo. through W5141 (NWSH)

SHIP TO: MAILING ADDRESS only OF ACCOUNTABLE OFFICE
(NOAA Hdq. office-enter building and room No.)

National Weather Service Forecast Office
5010 - 9th Avenue South
Great Falls, MT. 59405

PACKED IN →	BOXES	CARTONS	CASES	BUNDLES	CRATES

WEIGHT	CARRIER

BILL OF LADING NUMBER	DATE

FILLED BY

TYPE: ☐ ADMINISTRATIVE *(Include forms)* ☒ TECHNICAL *(Equipment Meteorological, Instrumental, Electronic, and accessories.)*

CATALOG NUMBER *(For each item)*	QUANTITY ON HAND	QUANTITY ORDERED	DESCRIPTION OF ITEM	UNIT	UNITS ISSUED	UNIT PRICE	TOTAL VALUE
1. NSI	0	7	Redesigned A1 Card				
2. NSI	0	5	12-Volt Coupler Solenoid				
			For AHOS Modification No. 2				
			EXAMPLE				

NOTE: DO NOT ORDER ANY CLSC STOCK ITEMS ON THIS STORES REQUISITION

CHARGE TO INVENTORY OF: *(If other than consignee)*

COST ACCOUNTING DATA

	ORGAN. CODE	TASK NUMBER	OBJECT CLASS
SUPPLIES/ EQUIP.	W40950	8AE901	
TRANS-PORTATION			

REQUESTED BY
SIGNATURE OF OFFICIAL IN CHARGE

APPROVED BY
SIGNATURE OF DESIGNATED OFFICIAL

APPROVAL FOR ISSUE OF NON-EXPENDABLE EQUIPMENT
SIGNATURE OF DESIGNATED OFFICIAL

SPECIAL SHIPPING INSTRUCTIONS OR ADDRESSES

NOAA FORM 37-4
(11-73)

FIGURE 4

INSTRUCTIONS FOR REPORTING EQUIPMENT MODIFICATIONS

Report the completion of all equipment modifications on an H-28 form as illustrated below. Send the completed original to Engineering Data Analysis Branch, W511, 8060 13th Street, Silver Spring, Maryland 20910, and a copy to the AES for the area. Write your name in Block 7 and leave the remainder of the top line blank.

For each equipment modified, fill in one line of the form according to the block-by-block instructions listed below.

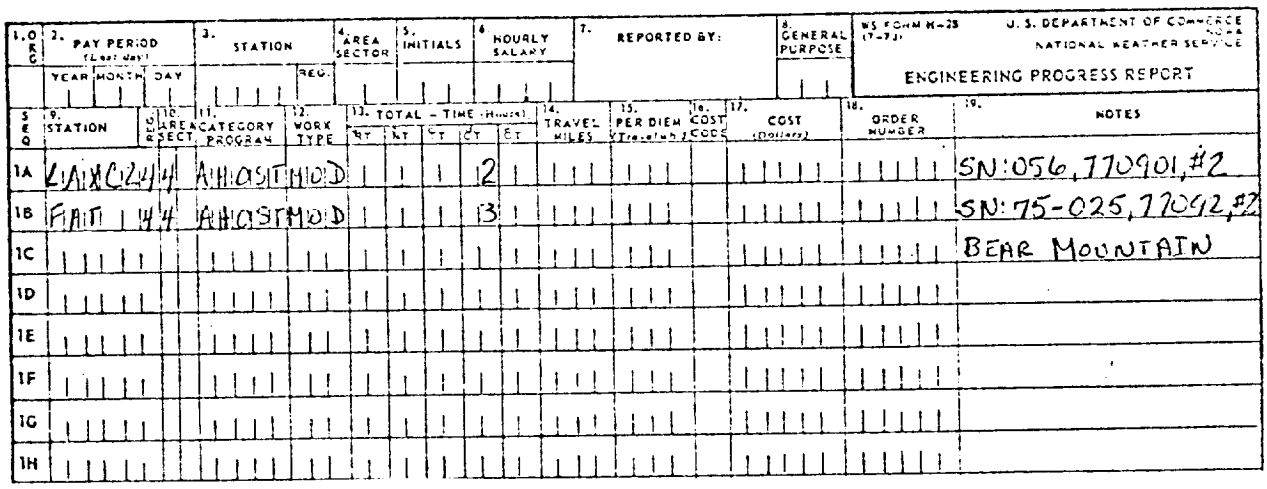

1. ORG	2. PAY PERIOD (Last day) YEAR MONTH DAY	3. STATION REG.	4. AREA SECTOR	5. INITIALS	6. HOURLY SALARY	7. REPORTED BY:	8. GENERAL PURPOSE	WS FORM H-28 (7-73) U. S. DEPARTMENT OF COMMERCE NOAA NATIONAL WEATHER SERVICE ENGINEERING PROGRESS REPORT

SEQ	9. STATION	REG.	10. AREA SECT.	11. CATEGORY PROGRAM	12. WORK TYPE	13. TOTAL - TIME (Hours) MT	NT	CT	CT	ET	14. TRAVEL MILES	15. PER DIEM (Travel/mh)	16. COST CODE	17. COST (Dollars)	18. ORDER NUMBER	19. NOTES
1A	LAXC	2	4	AHOST	MOD				2							SN:056,770901,#2
1B	FAT	1	4	AHOST	MOD				3							SN:75-025,77092,#2
1C																BEAR MOUNTAIN
1D																
1E																
1F																
1G																
1H																

Block 9. Station identifier and region. See Engineering Handbook No. 4 (EHB-4), Appendix B, for a list of station locations and identifiers. (Copies of EHB-4 may be requested from Central Logistics Supply Center). Not every location has been assigned an identifier. Some equipments are reported under a larger station. The AHOST at Bear Mountain in the above example is listed in the equipment inventory under Fresno/FAT. Thus, "FAT" is the correct entry for Block 9. The actual location is reported in Block 19.

Block 10. Area.

Block 11. Equipment Code. See EHB-4, Appendix C. for codes and descriptions.

Block 12. The letters "MOD."

Block 13d. (Labeled "MT" on new forms, "CT" on old forms) Number of hours needed to complete the modification.

Block 19. Equipment serial number (as listed in equipment inventory), date modification was completed, modification number, and equipment location. The equipment location may be omitted if it's the same as the location indicated in Block 19.

If you are unsure of the correct station identifier, equipment code, or serial number to use, contact the AES for the area.

WS FORM H-2 (7-73)

U. S. DEPARTMENT OF COMMERCE
NOAA
NATIONAL WEATHER SERVICE

ENGINEERING PROGRESS REPORT

1. ORG	2. PAY PERIOD (Last day) YEAR	MONTH	DAY	3. STATION	REG.	4. AREA SECTOR	5. INITIALS	6. HOURLY SALARY	7. REPORTED BY:	8. GENERAL PURPOSE

SEQ	9. STATION	REG.	10. AREA SECT.	11. CATEGORY PROGRAM	12. WORK TYPE	13. TOTAL - TIME (Hours) RT	NT	TT	CT	ST	14. TRAVEL MILES	15. PER DIEM (Travel wh.$	16. COST CODE	17. COST (Dollars)	18. ORDER NUMBER	19. NOTES
1A																
1B																
1C																
1D																
1E																
1F																
1G																
1H																
1I																
1J																
1K																
1L																
1M																
N				ADMIN.												FOR LEAVE ENTER WORK TYPE: LVA = Annual Leave; LVC = Compensatory Leave; LVH = Holiday; LVS = Sick; LVM = Military or Other; LVN = Combination of Above
O				LEAVE												

20. REMARKS

COST CODES:
C = CONTRACTS
P = PURCHASED LOCALLY
G = GOVERNMENT FURNISHED
M = MISCELLANEOUS

U.S. DEPARTMENT OF COMMERCE
National Oceanic and Atmospheric Administration
NATIONAL WEATHER SERVICE
Silver Spring, Md. 20910

December 23, 1985 W/OTS141 - BGM

TO: All NWS Regional Headquarters, Area Electronics Supervisors, and Electronics Technicians (EHB-10 Distribution)

FROM: W/OTS1 - J. Michael St. Clair

SUBJECT: Transmittal Memorandum for Engineering Handbook No.. 10, Issuance 85-4

1. Material Transmitted:

Engineering Handbook No. 10 - Automatic Hydrologic Observing System (AHOS) Section 3.3, Modification Note 5: EPROM Installation and Programming Instructions for the Handar 545A Frogramming Test Set.

2. Summary:

This modification upgrades the Handar 545A Programming Test Set, permitting display of the RAMOS message. It also includes a provision which permits the transmission of the full set of ASCII letters, A through Z.

3. Effect on Other Instructions:

None.

4. Reporting Modification to WSH Engineering Division:

Target date for reporting completion of this modification is Jan. 3, 1986.

All completed equipment modifications shall be reported on the Form H-28, Engineering Progress Report, according to instructions contained in EHB-4, Part 2 (see attached exhibit).

AHOS MODIFICATION NOTE 5
(For Electronics Technicians)

SUBJECT	:	EPROM Installation and Programming Instructions for the Handar 545A Programming Test Set
PURPOSE	:	To upgrade the Handar 545A Programming Test Set to enable display of the RAMOS message and to permit transmission of the full set of ASCII letters.
EQUIPMENT AFFECTED	:	Handar 545A Programming Test Set, D900-2
PARTS REQUIRED	:	One EPROM marked "545-5 Arev 6"
MOD PROCUREMENT	:	EPROM set will be sent to all offices with a Handar 545A Programming Test Set.
SPECIAL TOOLS REQUIRED	:	None
TEST EQUIPMENT REQUIRED	:	None
TIME REQUIRED	:	1 Hour

General:

This modification is a maintenance aid which gives the Programming Test Set the capability of displaying the RAMOS message at the RAMOS site. It also incorporates the capability to transmit the full set of ASCII letters, A through Z. This capability will be used in the future to program the station identifier in the Limited Automatic Remote Collector (LARC). Parts I, II, and III must be performed to complete this modification.

I. Handar 545A Programming Test Set EPROM Replacement

A. Preparation: Load any program that you may have saved in the Programming Test Set (and don't want to lose) into a 540A Data Collection Platform (DCP) for safekeeping while the new firmware is being installed.

B. Caution: Leave the EPROM in its protective antistatic foam until you are ready to insert it. Be aware and take standard antistatic precautions when handling EPROMs.

c. Procedure:

1. Remove the two fuses marked "BATTERY" and "EXTERNAL DC". These fuses are located on the front panel of the 545A Programming Test Set. (Saved program and clock setting will be lost.)

2. Remove four screws; one on each side of the handle and the other two on the hinge side of the case.

3. Use a large common screwdriver to lift the lower edge of the panel out of the case. (The rubber shock mounts will slightly resist removal.)

4. Lift the unit from the case and set the case aside. Place the panel face down on a soft surface.

5. Remove the eight screws holding the bottom cover; lift the cover from the unit and set it aside.

6. Turn the unit so that the battery is away from you. The CPU board (540-6003) is on your left with the five EPROM sockets (where the firmware will be installed) at the bottom closest to you.

* NOTE: The CPU board in some of the older 545A programming test sets may have 24 pin sockets, if the CPU board has 24 pin sockets you will not be able to implement this modification. Skip to step 8 in the procedure to reassemble your 545A programming test set. Contact Mr. Harvey Hoppe, FTS or (301)-427-7842 for further instructions.

7. The EPROM sockets are numbered from left to right, one to five. Refer to the attached drawing, Figure #1 and locate EPROM socket #5, remove the EPROM, carefully avoid bending the pins. Install the new EPROM marked 545-5 into the EPROM socket #5.

8. Install the bottom cover replacing the eight screws. Carefully insert the unit back into the case. You will have to use a common screwdriver or other similar tool to "shoe-horn" the rubber shock mounts back into position. Replace the four original screws that hold the 545A in the case.

9. Replace the two fuses. If you have a program loaded into a platform for safekeeping, save it into the 545A. Now reset the time and date in the 545A (it must disconnected from the DCP).

II. Programming for Maintenance

The following procedure enables the technician to perform maintenance work on the RAMOS, using the HANDAR 545A Programming Test Set to display the RAMOS message. Familiarity with RAMOS Modification Note 5 (EHB-11) is desirable.

Procedure

1. Connect the HANDAR 545A Programming Test Set to the HANDAR 540A Data Collection Platform (DCP). This is achieved by attaching the cable from the connector on the 545 programming set marked "Program I/O" to the mating connector on the 540A DCP marked "Program I/O".

2. Turn off the RAMOS, remove the service card, and then turn the RAMOS on. (If the service card is left in, a carriage return in the RAMOS message causes the buffer to be erased. The result is a blank display.)

3. At this point, the DCP may need to be programmed. If the display reads "SYSTEM PROG REQUIRED-PRESS ID" and the system needs to be programmed. Refer to "Programming Procedures" and RAMOS -Modification Note 5, EHB-11.

4. Put the 545A programming test set in the programming mode by pressing "PROG" followed by "2" and "ENTER". The display should read "P HANDAR 540A DCP-REV X.X.". Unless you have just programmed the system in step 2, you need to save the program. Press "SAVE" and "ENTER". Proceed after display reads "DONE".

5. Press "XMIT". "GOES PRI XMT MODE" will be displayed. Set this to zero by pressing "0" and "ENTER". (This cancels the transmitting mode for the time being.)

6 Press "MEAS" to display the sensor information. Press the scroll down key until "MEAS INTERVAL 01:00:00" appears. Change to a 1 minute interval by pressing "00:0l:00" and "ENTER". "CHANGE ALL CHANS? (1)=Y (2)=N" will appear. Press "1" and "ENTER". Display should now read "MEAS INTERVAL 00:01:00”. This causes the HANDAR DCP to read the RAMOS once per minute.

7. Press scroll down key again and "START OF MEAS" will be displayed. The Start of Meas time should be 3 to 5 minutes ahead of the present time. Enter the appropriate time in Greenwich Mean Time. Press "ENTER" followed by "1" and "ENTER" to enter the information. The display should read your entered time.

8. Press "RUN" to get into the run mode. The display should read "R RUN/MONITOR MODE". To see the time until the next scan, press "NSCAN" (you may continue to press "NSCAN" to update displayed time until the next scan). If the amount of time until the next scan is more than 5 minutes, then repeat Step 7. NOTE: The RAMOS must make its first scan before you proceed to Step 9.

9. The following sequence allows you to read the buffer. It can be repeated as often as needed.

   Press "F4" and "B" to enter the text editor. (The display should now be blank.)

   Press "F4" and "D" to display the buffer. (The display will be up to 40 characters of the RAMOS message.)

   Press "F4" and "CLEAR" to clear the buffer.

   Press "F4" and "C" to leave the text editor.

10. Turn off the RAMOS, install the service card and turn the RAMOS on.

11. Press "PROG". "ENTER (1)=SERVICE (2)=ALL" will appear. Press "2" and "ENTER" to get into the program mode. The display should read "P HANDAR 540A DCP-REV X.X.".

12. Press "LOAD" and "ENTER". This will load the program you previously saved in the programming test set into the DCP. After "DONE" appears, proceed.

13. Press "XMIT" then press the scroll down key. The “1ST GOES XMT TIME" may have to be changed. (Consult Table 1 in the RAMOS Modification Note 5, EHB-11 for the proper time.) The first transmit time should occur within the next hour. To change the time, enter the appropriate time in the following format "hh:mm:ss" then press "ENTER".

14. Press "MEAS" then press the scroll down key until you reach "START OF MEAS 00:00:00". Set this time to 2 minutes before the first GOES XMT TIME. After prompt, press “1” and "ENTER".

15. Press "RUN" to get into the run mode.

16. Press "NSCAN" and “NXMIT” both times should be within the next hour.

17. Disconnect the programming test set.

III. Disposition of Removed Part

If the EPROM replacement is a success, return the replaced EPROM to Attn: Thomas Cavanagh, National Weather Service, 8060 13th Street, W/OTS141, Silver Spring, MD 20910. If the EPROM replacement is a failure, restore the HANDAR 545A Programming Test Set to its former status and immediately send the EPROM to the above address with an explanation.

IV. Instruction Manual Changes

None.

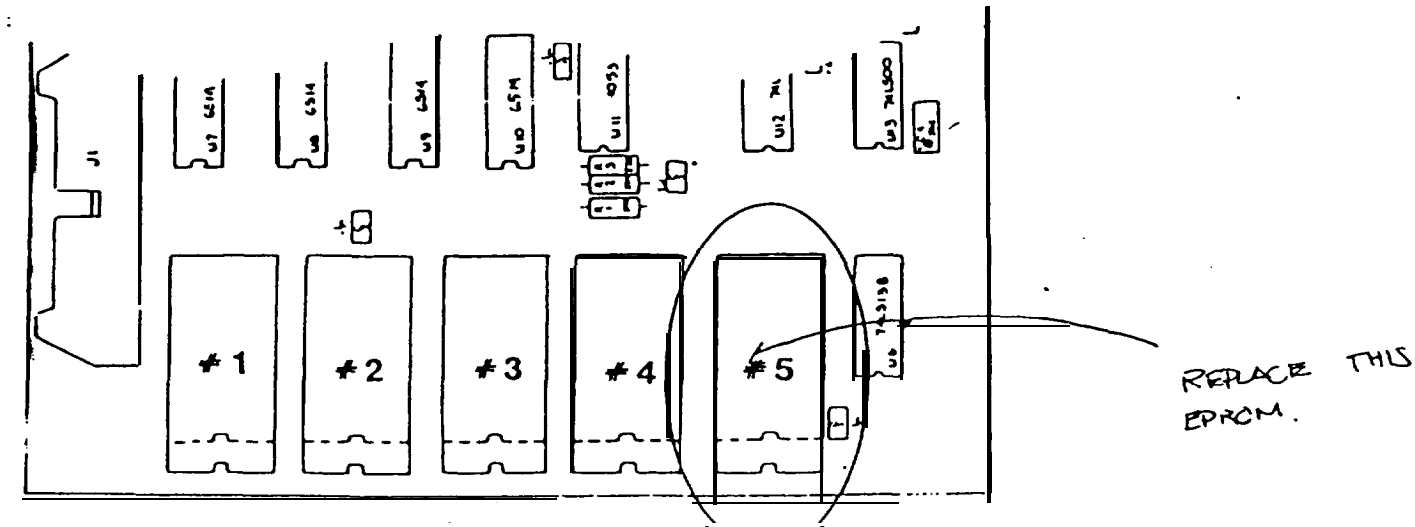

Figure 1

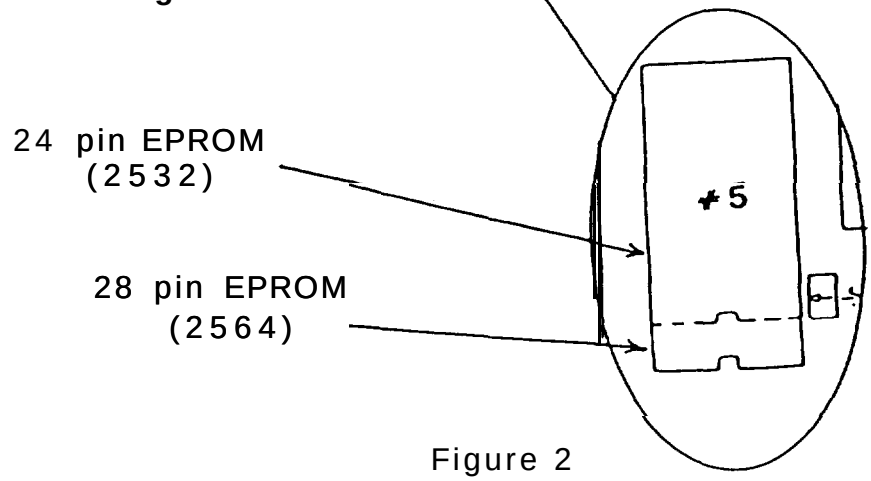

Figure 2

U.S. DEPARTMENT OF COMMERCE
National Oceanic and Atmospheric Administration
NATIONAL WEATHER SERVICE
Silver Spring, Md. 20910

April 10, 1986

W/OTS141 - BGM

TO: All NWS Regional Headquarters, Area Electronics Supervisors, and Electronics Technicians (EHB-10 Distribution)

FROM: W/OTS1 - J. Michael St. Clair

SUBJECT: Transmittal Memorandum for Engineering Handbook No. 10, Issuance 85-4

1. Material Transmitted:

Engineering Handbook No. 10 - Automatic Hydrologic Observing System (AHOS) Section 3.3, Modification Note 5: Addendum to be filed with Modification Note 5, Section 3.3, EHB-10.

2. Summary:

This is an addendum to Modification Note 5, Section 3.3 (AHOS). The change affects "PARTS REQUIRED", page 1, and Figures 1 and 2. Replace pages.

3. Effect on Other Instructions:

None.

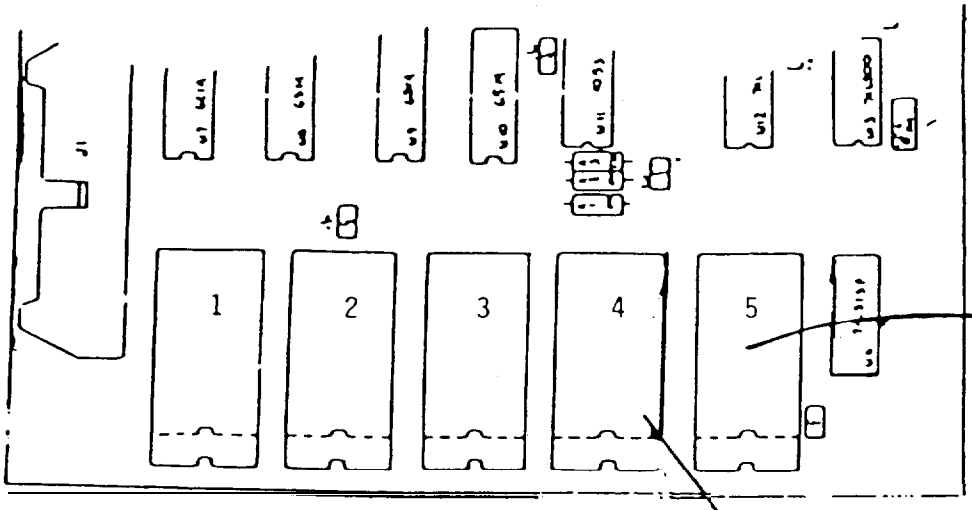

Figure 1

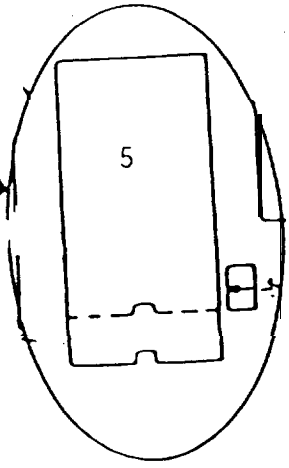

24 pin EPROM
(2532)

REPLACE EPROM #4&5
With REV 7

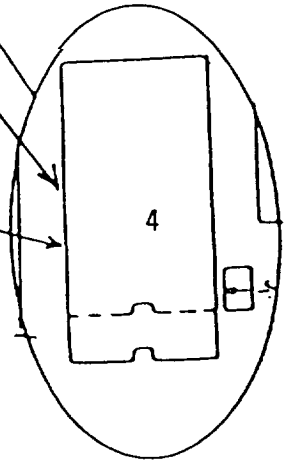

FIGURE #2

FIGURE #2

1. ORG	2. PAY PERIOD (Last day)			3. STATION		4. AREA SECTOR	5. INITIALS	6. HOURLY SALARY	7. REPORTED BY:	8. GENERAL PURPOSE
	YEAR	MONTH	DAY		REG.					

WS FORM H-28
(7-77)

U.S. DEPARTMENT OF COMMERCE
NOAA
NATIONAL WEATHER SERVICE

ENGINEERING PROGRESS REPORT

SEQ	9. STATION	REG.	10. AREA SECT	11. CATEGORY PROGRAM	12. WORK TYPE	13. TOTAL – TIME (Hours) RT	NT	PT	MT	ST	14. TRAVEL MILES	15. PER DIEM (Travel w.h.s)	16. COST CODE	17. COST (Dollars)	18. ORDER NUMBER	19. NOTES
1A				RAMOS	MOD											MOD # 9 RAMOS Serial #
1B																Date Modification completed
1C																
1D																
1E																
1F																
1G																
1H																
1I																
1J																
1K																
1L																
1M																
N				ADMIN.												FOR LEAVE ENTER WORK TYPE: LVA = Annual Leave LVC = Compensatory Leave LVH = Holiday LVS = Sick LVM = Military or Other
O				LEAVE												

C = CONTRACTS
T = TRANSPORTATION OF THINGS

COST CODES:
P = PURCHASED LOCALLY
G = GOVERNMENT FURNISHED

N = NONCAPITALIZED PROPERTY
M = CAPITALIZED PROPERTY

20. REMARKS

Blocks 1 through 10 must also be filled out.

Enter time required to complete Mod in Col. 13d (MT).

This Mod must be reported into the EMRS System before 30 days following completion of modification

1. ORG	2. PAY PERIOD (Last day)			3. STATION		4. AREA SECTOR	5. INITIALS	6. HOURLY SALARY	7. REPORTED BY:	8. GENERAL PURPOSE
	YEAR	MONTH	DAY		REG.					

WS FORM H-28 (7-77)

U. S. DEPARTMENT OF COMMERCE
NOAA
NATIONAL WEATHER SERVICE

ENGINEERING PROGRESS REPORT

SEQ	9. STATION	REG.	10. AREA SECT	11. CATEGORY PROGRAM	12. WORK TYPE	13. TOTAL – TIME (Hours) 1ST	2ND	3RD	4TH	5TH	14. TRAVEL MILES	15. PER DIEM (Travel Sub.)	16. COST CODE	17. COST (Dollars)	18. ORDER NUMBER	19. NOTES
1A				A H O S S	M O D	/										HB# 10 SEC. NO. 3.3 MOD # 5 SERIAL #
1B																Date Mod Completed
1C																
1D																
1E																
1F																
1G																
1H																
1I																
1J																
1K																
1L																
1M																
N				ADMIN.												FOR LEAVE ENTER WORK TYPE: LVA = Annual Leave LVC = Compensatory Leave LVH = Holiday LVS = Sick LVM = Military or Other
O				LEAVE												

20. REMARKS

COST CODES:
C = CONTRACTS
T = TRANSPORTATION OF THINGS
P = PURCHASED LOCALLY
G = GOVERNMENT FURNISHED
N = NONCAPITALIZED PROPERTY
M = CAPITALIZED PROPERTY

AHOS MODIFICATION NOTE 5
(For Electronics Technicians)

SUBJECT	:	EPROM Installation and Programming Instructions for the Handar 545A Programming Test Set
PURPOSE	:	To upgrade the Handar 545A Programming Test Set to enable display of the RAMOS message and to permit transmission of the full set of ASCII letters.
EQUIPMENT AFFECTED	:	Handar 545A Programming Test Set, D900-2
PARTS REQUIRED	:	Two EPROM's marked "545-4 and 545-5 REV. 7"
MOD PROCUREMENT	:	EPROM set will be sent to all offices with a Handar 545A Programming Test Set.
SPECIAL TOOLS REQUIRED	:	None
TEST EQUIPMENT REQUIRED	:	None
TIME REQUIRED	:	1 Hour

General:

This modification is a maintenance aid which gives the Programming Test Set the capability of displaying the RAMOS message at the RAMOS site. It also incorporates the capability to transmit the full set of ASCII letters, A through Z. This capability will be used in the future to program the station identifier in the Limited Automatic Remote Collector (LARC). Parts I, II, and III must be performed to complete this modification.

I. Handar 545A Programming Test Set EPROM Replacement.

A. Preparation: Load any program that you may have saved in the Programming Test Set (and don't want to lose) into a 540A Data Collection Platform (DCP) for safekeeping while the new firmware is being installed.

B. Caution: Leave the EPROM in its protective antistatic foam until you are ready to insert it. Be aware and take standard antistatic precautions when handling EPROMs.

C. Procedure:

1. Remove the two fuses marked "BATTERY" and "EXTERNAL DC". These fuses are located on the front panel of the 545A Programming Test Set. (Saved program and clock setting will be lost.)

2. Remove four screws; one on each side of the handle and the other two on the hinge side of the case.

3. Use a large common screwdriver to lift the lower edge of the panel out of the case. (The rubber shock mounts will slightly resist removal.)

4. Lift the unit from the case and set the case aside. Place the panel face down on a soft surface.

5. Remove the eight screws holding the bottom cover; lift the cover from the unit and set it aside.

6. Turn the unit so that the battery is away from you. The CPU board (540-6003) is on your left with the five EPROM sockets (where the firmware will be installed) at the bottom closest to you.

* NOTE: The CPU board in some of the older 545A programming test sets may have 24 pin sockets, if the CPU board has 24 pin sockets you will not be able to implement this modification. Skip to step 8 in the procedure to reassemble your 545A programming test set. Contact Mr. Harvey Hoppe, FTS or (301)-427-7842 for further instructions.

7. The EPROM sockets are numbered from left to right, one to five. Refer to the attached drawing, Figure #1 and locate EPROM socket #5, remove the EPROM, carefully avoid bending the pins. Install the new EPROM marked 545-5 into the EPROM socket #5.

U.S. DEPARTMENT OF COMMERCE
National Oceanic and Atmospheric Administration
NATIONAL WEATHER SERVICE
Silver Spring, Md. 20910

W/OTS141 - BGM

May 12 ,1986

TO: All NWS Regional Headquarters, Area Electronics Supervisors, and Electronics Technicians (EHB-10 Distribution)

FROM: W/OTS1 - J. Michael St. Clair

SUBJECT: Transmittal Memorandum for Engineering Handbook No. 10, Issuance 86-3

1. Material Transmitted:

Engineering Handbook No. 10, Automatic Hydrologic Observing System (AHOS), Section 3.3, Modification Note 6: Installation of a 3.3K ohm resistor to the voice/modem board (550-6003), located in the LARC system.

2. Summary:

This modification corrects the problem of slow speech and print, when the Limited Automatic Remote Collector (LARC) is interrogated during cold weather.

3. Effect on Other Instructions:

None.

4. Certification Statement:

The modification has been tested by the Test and Evaluation Division at Sterling, Virginia , and at a selected field site for operational integrity.

5. Reporting Modification to WSH Engineering Division:

All completed equipment modifications shall be reported on the Form H-28.

LIMITED AUTOMATIC REMOTE COLLECTOR MODIFICATION NOTE 6
(for Electronics Technicians)

SUBJECT : Installation of a 3.3 K ohm resistor to the voice/modem board (550-6003), located in the LARC system.

PURPOSE : To correct the problem of slow speech and print when the LARC system is interrogated during cold weather.

EQUIPMENT AFFECTED: Limited Automatic Remote Collector (LARC), D925.

PARTS PROVIDED : 1 each 3.3 K ohm resistor.

MOD PROCUREMENT : All parts required to complete each LARC system modification will be shipped directly to the affected stations.

SPECIAL TOOLS REQUIRED : None

TEST EQUIPMENT REQUIRED : None

TIME REQUIRED : 1 HOUR

GENERAL

Several stations have reported that, during cold weather when the LARC system is interrogated, the system responds with slow speech and print. A modification to the voice/modem board eliminates this problem.

PROCEDURE

1. Open the LARC system and remove power by turning the switch off. Locate and remove the voice/modem board (550-6003).

2. Refer to figure 1, cut a piece of sleeving for the resistor that is going to be soldered to the feed-thru. Slip the cut sleeving over the lead. Bend the other lead of the 3.3K ohm resistor as shown in figure 1. Solder this lead to the land going to U-17, pin 14. Solder the lead with the sleeving into the feed-thru. This land goes to C16.

3. Install the removed voice/modem board (550-660) and restore power. This completes the modification to the voice/modem board.

MANUAL CHANGES: None

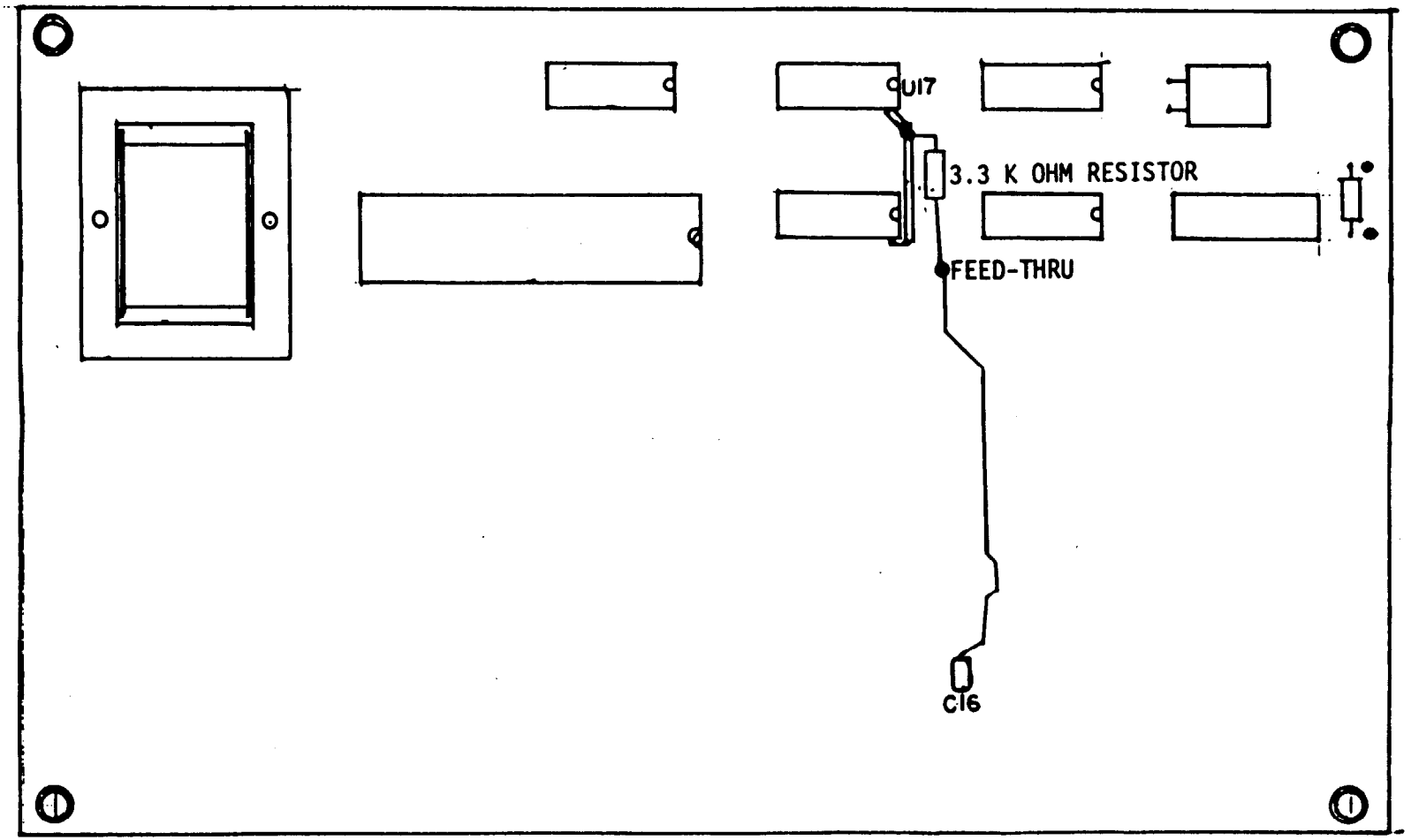

VOICE/MODEM BOARD 550-6003

FIGURE 1

1. ORG	2. PAY PERIOD (Last day) YEAR	MONTH	DAY	3. STATION	REG.	4. AREA SECTOR	5. INITIALS	6. HOURLY SALARY	7. REPORTED BY:	8. GENERAL PURPOSE

WS FORM H-28 (7-77)

U. S. DEPARTMENT OF COMMERCE
NOAA
NATIONAL WEATHER SERVICE

ENGINEERING PROGRESS REPORT

SEQ	9. STATION	REG.	10. AREA SECT	11. CATEGORY PROGRAM	12. WORK TYPE	13. TOTAL - TIME (Hours) a RT	b NT	c TT	d MT	e OT	14. TRAVEL MILES	15. PER DIEM (Travel wh.$)	16. COST CODE	17. COST (Dollars)	18. ORDER NUMBER	19. NOTES
1A				L A R C	M O D											EHB-10 SECTION 3.3
1B																Mod. NO. 6
1C																S/N
1D																DATE
1E																
1F																
1G																
1H																
1I																
1J																
1K																
1L																
1M																
N				ADMIN.												FOR LEAVE ENTER WORK TYPE: LVA = Annual Leave; LVC = Compensatory Leave; LVH = Holiday; LVS = Sick; LVM = Military or Other
O				LEAVE												

20. REMARKS

C = CONTRACTS
T = TRANSPORTATION OF THINGS

COST CODES:
P = PURCHASED LOCALLY
G = GOVERNMENT FURNISHED

N = NONCAPITALIZED PROPERTY
M = CAPITALIZED PROPERTY

See Engineering Handbook 4 Issuance 86-1 revised 1/1/86 Part 2 (Blocks 12 & 13d) for instructions on reporting modifications

U.S. DEPARTMENT OF COMMERCE
National Oceanic and Atmospheric Administration
NATIONAL WEATHER SERVICE
Silver Spring, Md. 20910

W/OSO321. - BGM

March 31, 1987

TO All NWS Regional Headquarters, Area Electronics Supervisors, and Electronics Technicians (EHB-IO Distribution)

FROM: W/0S03 - J. Michael St. Clair

SUBJECT: Transmittal Memorandum for Engineering Handbook No. 10, Issuance 87-3

1. Material Transmitted:

Engineering Handbook No. 10, Automatic Hydrologic Observing System (AHOS), Section 3.3; Modification Note 7: DARDC 300 Baud Upgrade.

2. Summary:

This modification is to convert DARDC's that operate at a 110 baud rate to a 300 baud rate. This modification applies to the Eastern Region only.

3. Effect on Other Instructions:

None. DARDC's used in other programs (equipment codes ASOOW, MWR, MWT) are not affected by this modification.

4. Certification Statement:

This modification has been tested by the Equipment Test and Evaluation Branch at Sterling, Virginia.

5. Reporting Equipment Modifications:

The target date for completion of this modification is December 31, 1987. All completed equipment modifications shall be reported on the Form H-28, using the code DARDC.

AHOS MODIFICATION NOTE 7
(For Electronics Technicians)

SUBJECT : 300 Baud Upgrade

PURPOSE : To standardize and increase efficiency of AHOS data collection.

EQUIPMENT AFFECTED : All DARDCs in the Eastern Region

PARTS REQUIRED : None

MOD PROCUREMENT : None

SPECIAL TOOLS REQUIRED : None

TEST EQUIPMENT REQUIRED : None

TIME REQUIRED : .5 Hours

GENERAL:

The hydrologic program uses both DARDCs and LARCs. The DARDCs have traditionally operated at 110 baud, while the LARCs operate at 300 baud. This modification provides for the conversion of the DARDCs to 300 baud, thus increasing the efficiency of the data collection, data quality control, and maintenance functions.

PROCEDURE:

1. Contact Mr. Elroy McLeod, W/0S0242, FTS 763-7400, to coordinate the implementation of this modification. (He is responsible for changing the CADAS baud rate at approximately the same time you change the DARDC baud rate.)

2. Remove the wire jumper which is between test points TP5 (WHITE) and TP6 (RED) on the DARDC 1A1A2 Initiator PCB module.

3. Verify that the DARDC now operates at 300 baud by interrogating it from the remote terminal. If the DARDC should fail to operate at 300 baud, restore it to its original configuration and inform Mr. Elroy McLeod.

Engineering Division
W/OSO321:BGM

AUTOMATIC HYDROLOGIC OBSERVING SYSTEM (AHOS)
MODIFICATION NOTE 8
(for Electronics Technicians).

SUBJECT	:	Signal Circuit Protector for Limited Automatic Remote Collector (LARC) and Automatic Remote Collector (ARC) Systems
PURPOSE	:	Provide surge protection for the LARC and ARC systems.
EQUIPMENT AFFECTED	:	All LARC and ARC telephone systems connected to telephone lines.
PARTS REQUIRED	:	(1) One Signal Circuit Protector, Model 325-1M (2) Ground Rod (not provided)
MOD PROCUREMENT	:	All parts required to complete each modification will be shipped directly to the station at the request of the AES. The AES will send a list of protector requirements to the Hydro SPL, Bobby McCormick, W/OSO32, NWS Headquarters, Room 326.
SPECIAL TOOLS AND TEST EQUIPMENT REQUIRED	:	None
TIME REQUIRED	:	1 hour
EFFECT ON OTHER INSTRUCTIONS	:	None
CERTIFICATION STATEMENT	:	Equipment tested by the Equipment Test and Evaluation Branch, Sterling, Virginia.

General

This modification incorporates a signal circuit protector module in the telephone line to provide surge protection for the LARC and ARC systems.

The signal circuit protector module contains a three-electrode gas tube and a fail-short mechanism which operates from both sides of the telephone line to ground under a power cross condition.

Procedure

1. Remove the cover from the signal circuit protector and the large grommet located in the base.

2. Drill two small holes through the case of the signal circuit protector. Mount the protector to a non-metallic surface near the incoming telephone line.

3. The red wire of the incoming telephone line is to be connected to one of the terminal lugs on the signal circuit protector, as shown in attached drawing FD-D925-3A1-SDOO1. The green wire of the incoming telephone line is to be connected to the other lug, as shown. The center lug is to be connected to earth ground. Station is to furnish braid or AWG 10 wire.

4. The final connection is to be made by using a piece of telephone wire and connecting it between the signal circuit protector and the RJ-11C jack. The red wire is connected to the signal circuit protector lug that has the incoming telephone line red wire; the green wire to the lug with the green incoming telephone line. The other end of this wire is to be connected to the RJ-11C jack. The red wire is connected to the red wire on the jack and the green to the green wire on the jack. Refer to the drawing for wiring diagram.

Reporting Modification

All completed equipment modifications shall be reported on the Form H-28 using equipment code LARC or ARC, as appropriate.

Attachment
NWS Drawing Number FD-D925-3A1-SD001

J. Michael St. Clair
Chief, Engineering Division

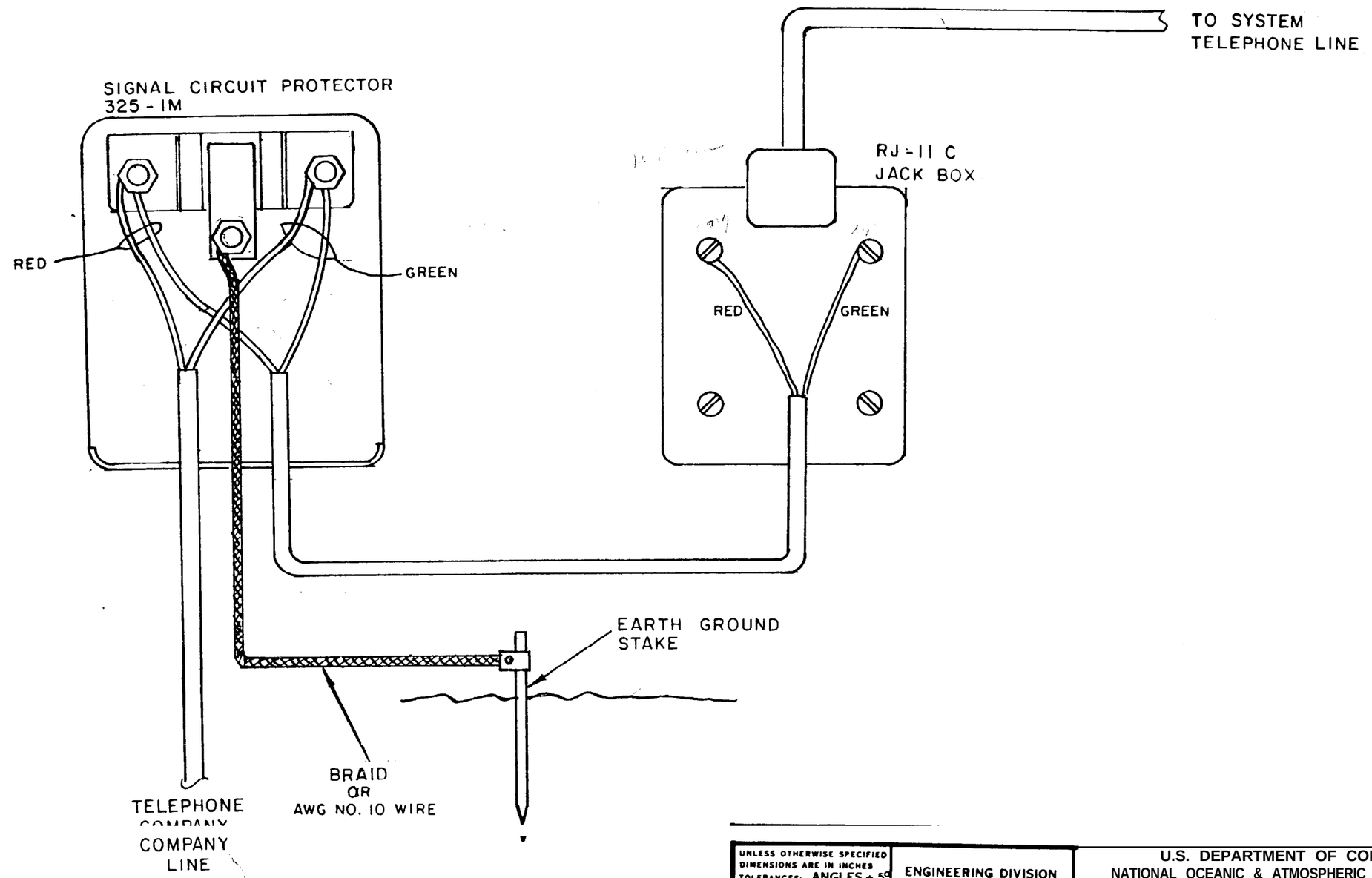

UNLESS OTHERWISE SPECIFIED DIMENSIONS ARE IN INCHES TOLERANCES: ANGLES ±.5° 3 PLACE DEC. ±.005 2 PLACE DEC. ±.02	ENGINEERING DIVISION SILVER SPRING, MD. 20910		U.S. DEPARTMENT OF COMMERCE NATIONAL OCEANIC & ATMOSPHERIC ADMINISTRATION NATIONAL WEATHER SERVICE
MATERIAL	PREPARED	R.E.B.	6/1/87
	CHECKED	R.E.R.	6/2/87
	DESIGN		
	APPROVED BY		PHONE LINE SIGNAL CIRCUIT PROTECTOR ARC/T OR LARC
	APPROVED BY		SIZE B · DATE · DRAWING NO. FD-D925-3A1 -SD001
			SCALE: · SHEET 1 OF 1 · FILE

AUTOMATIC HYDROLOGIC OBSERVING SYSTEM (AHOS)
MODIFICATION NOTE 9
(for Electronics Technicians)

SUBJECT:	:	Stand-Alone Stage Installation for Limited Automatic Remote Collector (LARC) and Automatic Remote Collector (ARC) Systems.
PURPOSE	:	To eliminate the need for an ADR or other equipment by providing direct interface from the stage sensor to a LARC or ARC.
EQUIPMENT AFFECTED	:	All LARC and ARC systems requiring a Stand-Alone configuration.
PARTS REQUIRED	:	(1) Incremental Shaft Encoder Mounting Bracket D105-1MP1 (2) 436 Incremental Shaft Encoder D105-1 (3) Drive Pulley Assembly D925-4MP3 (4) Idler Pulley Assembly D925-4
MOD PROCUREMENT	:	All parts, except float tape, required to complete each modification will be shipped directly to the station for the initial installation. The technician will determine the length of float tape and order it from NLSC. All replacement parts can be purchased from the National Logistics Supply Center (NLSC).
SPECIAL TOOLS AND TEST EQUIPMENT REQUIRED	:	None
TIME REQUIRED	:	1.5 hours
EFFECT ON OTHER INSTRUCTIONS	:	None
CERTIFICATION STATEMENT	:	Equipment tested by the Equipment Test and Evaluation Branch, Sterling, Virginia.

General

Stand-Alone stage assembly is self-sufficient and does not require another piece of equipment for support. The Stand-Alone stage assembly is to be used only if there is no existing equipment to slave from.

This modification provides instructions for installation of a Stand-Alone stage assembly to the LARC and ARC systems that require this type configuration.

The kit contains an idler assembly that separates the float from the counterweight. This should help prevent the float tape from wrapping around itself during any turbulence in the stilling well.

This modification also incorporates MOVs on each of the signal lines. One set of MOVs is connected across the signal lines to ground at the system input and another set at the sensor. This will provide some protection for the sensor and system during a power-cross condition. The MOVs are to be used only if the furnished system cable has to be cut, and a long cable is required.

The Engineering Division has determined that a 10-inch diameter float and a 2-pound counterweight will be the standard installation for the Stand-Alone Assembly. If the standard installation cannot be installed because of an existing float, or floats in the stilling well, refer to the list provided below as an aid in making a selection for a float and counterweight. In making a selection, try to select the largest diameter float that will fit into the stilling well. The larger float will provide stability during heavy turbulence in the stilling well.

There are two counterweights and five floats to choose from in the "D" Section of Engineering Handbook No. 1 (EHB-1). A list of these counterweights and floats is provided below. A 20-oz counter weight is to be used with the 3- and 4-inch diameter floats. The 32-oz. counter weight is to be used with the 8-, 10-, and 12-inch floats.

WSN	DESCRIPTION	NSN
D530-8	COUNTERWEIGHT, FLOAT, LEAD 20-OZ	6680-00-916-1308
D530-9	COUNTERWEIGHT, FLOAT, LEAD 32-OZ	6680-00-943-9784
0530-10	FLOAT, COPPER, 8-INCH DIA	6680-00-943-9818
D530-11	FLOAT, COPPER, 10-INCH DIA	6680-00-924-9841
D530-12	FLOAT, COPPER, 12-INCH DIA	6680-00-916-1309
D535-2-3	FLOAT, 3-INCH X 18-INCH LONG	6680-00-919-1164
D536-2-3	FLOAT, SPUN COPPER, 4-INCH DIA	4820-00-918-5198

The list provided below is to be used as a separation guide for the idler pulley assembly from the float tape. The separation of the idler assembly from the float tape depends upon the diameter of the float to be used. If conditions of the separation guide cannot be met, the technician should use his/her judgement as to where the idler pulley assembly should be located. A 3- or 4-inch diameter float may or may not require an idler pulley assembly.

FLOAT DIAMETER	IDLER PULLEY ASSEMBLY SEPARATION FROM FLOAT TAPE
3-INCH	4.0 INCHES
4-INCH	4.5 INCHES
8-INCH	6.5 INCHES
10-INCH	7.5 INCHES
12-INCH	8.5 INCHES

Procedure

1. The Stand-Alone assembly is easy to install, provided some planning and forethought are used prior to installation. First, determine the location of the Stand-Alone assembly and idler assembly provided with the kit. The distance of separation for the float tape should be taken into consideration when determining idler assembly location.

2. Use the four nuts, bolts, and washers to mount the incremental shaft encoder to the Stand-Alone bracket.

3. Install the drive pulley assembly onto the incremental shaft encoder. Refer to figure 1.

4. Mount the Stand-Alone bracket on any flat surface using the lag bolts in the four mounting holes.

5. Once the location of the idler arm assembly has been determined, use the two lag bolts provided to bolt the bracket onto the surface. Check alignment of float tape from drive pulley to the idler wheel and ensure that it is straight. Refer to figure 2.

6. Refer to LARC wiring table 1 for wiring of the 550A hydrologger to the incremental shaft encoder. This configuration should be used only if the cable must be cut.

7. Refer to the incremental encoder cable wiring table 2 for information on wiring the ARC system to the Stand-Alone assembly.

8. To determine the length of float tape, install the counterweight on the float tape connector and lower the weight to the bottom of the stilling well. Ensure that the float does not engage the pulley. Allow for enough float tape to go over the idler pulley and the drive pulley; then add an additional 1 foot to this length.

9. Program the system for correct stage level.

10. This concludes installation and wiring for the ARC and LARC systems.

Reporting Modification to WSH Engineering Division

All completed equipment modifications shall be reported on the WS Form H-28 using equipment code LARC or ARC, as appropriate.

Attachments
Cable Wiring Table 1
Cable Wiring Table 2
Figures 1 and 2

J. Michael St. Clair
Chief, Engineering Division

CABLE WIRING TABLE 1
FOR LARC SYSTEM

STAND-ALONE CONFIGURATION

436A INCREMENTAL ENCODER (6-PIN CONNECTOR)	STAND-ALONE BRACKET (if used) TB1	LARC SYSTEM (6-PIN CONNECTOR) ENCODER #1
C Sw'd 5V (10KC)	2	C Sw'd 5V (10KC)
D SIGNAL B	4	D SIGNAL B
E SIGNAL A	6	E SIGNAL A
F GROUND	8	F GROUND

436A INCREMENTAL ENCODER (6-PIN CONNECTOR)	STAND-ALONE BRACKET (if used) TB1	LARC SYSTEM (4-PIN CONNECTOR) ENCODER #2
C Sw'd 5V (10KC)	2	B Sw'd 5V (10KC)
D SIGNAL B	4	C SIGNAL B
E SIGNAL A	6	A SIGNAL A
F GROUND	8	D GROUND

Connect either braid or a AWG No. 10 wire to the ground lug located on the Stand-Alone bracket and to the system earth ground stake.

CABLE WIRING TABLE 2
FOR ARC SYSTEM

STAND-ALONE CONFIGURATION

436A INCREMENTAL ENCODER (6-PIN CONNECTOR)	STAND-ALONE BRACKET (if used) TB1	ARC SYSTEM (26-PIN CONNECTOR)
E SIGNAL A	2	a SIGNAL A
D SIGNAL B	4	Z SIGNAL B
C Sw'd 5V (10KC)	6	Y Sw'd 5V (10KC)
F GROUND	8	X GROUND

Connect either braid or a AWG No. 10 wire to the ground lug located on the Stand-Alone bracket and to the system earth ground stake.

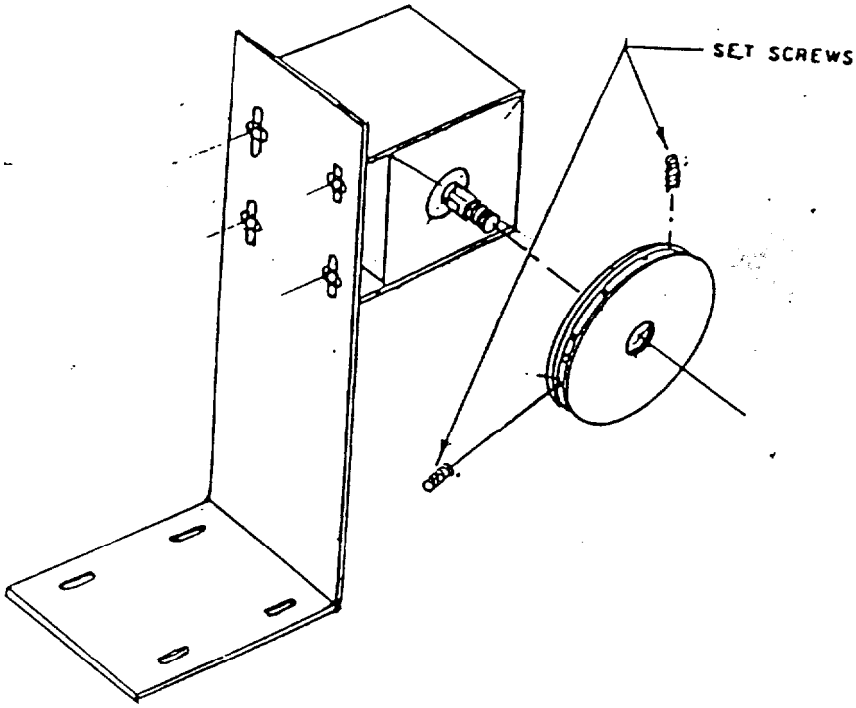

FIGURE 1

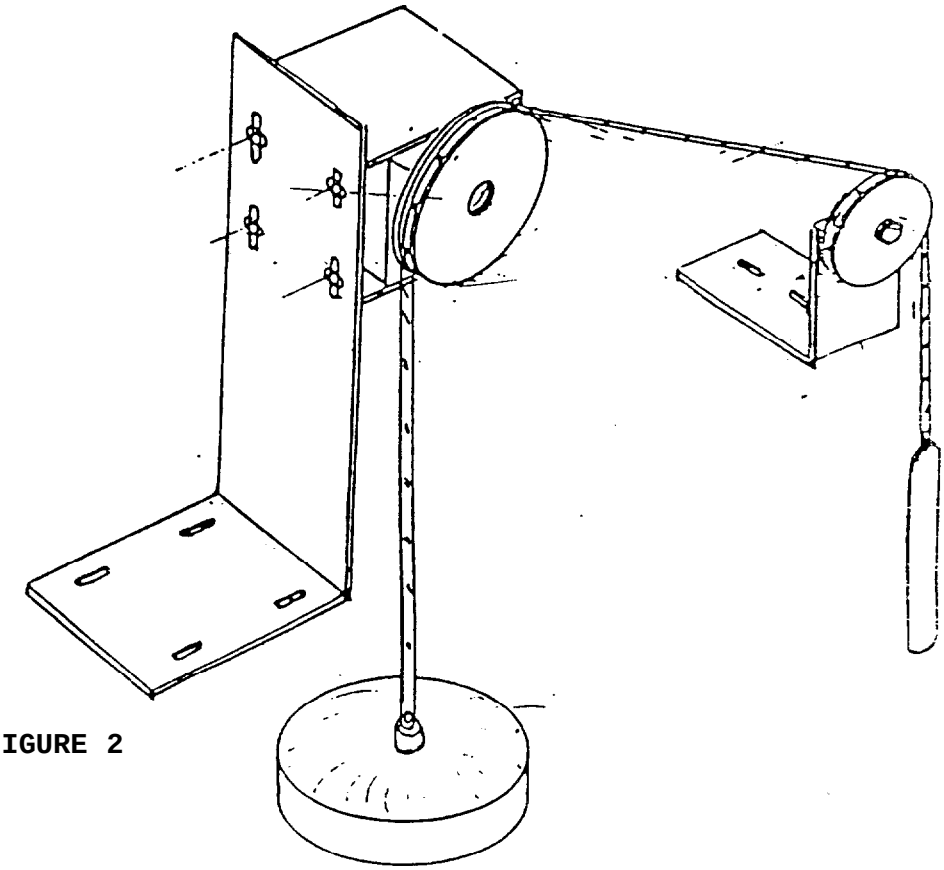

FIGURE 2

All special instrumentation maintenance schedules have been deleted.

MODIFICATION INDEX
AUTOMATIC HYDROLOGIC OBSERVING SYSTEM (AHOS)

Number	Date of Issue	Index

Item 1 deleted.

4. Equipment Maintenance Schedules. Experience in the operation of electronic equipment has well established that reliable service and accurate data can be obtained only by the application of suitable routine maintenance procedures. Maintenance schedules are prepared for the guidance of electronics technicians and operating personnel, and comprise the minimum periodic checking and servicing considered necessary to assure dependable operation. Checks intended for operating personnel are limited to routine functions that have been identified as those that could ordinarily be observed during the course of normal operation of the equipment. These functions are usually consolidated at the beginning of each maintenance schedule for ease of use, with the remaining sections devoted to the electronics technician functions. The operator functions and electronics technician functions have been printed on contrasting colored pages for ready identification.

Maintenance schedules are prepared with the view of being as complete as possible. Some checks specified are critical as regards calibration and sustained reliable operation. Others fall in a less critical category, and depending upon the technician's workload, can be deferred until later. This criterion is, therefore, the basis for establishing priority maintenance. Priorities indicated on maintenance schedules are to be interpreted as follows:

Priority 1 - This check is important to sustained system operation or calibration and should be performed on schedule.

Priority 2 - This check or operation can be omitted until next scheduled period of maintenance.

Once sufficient familiarity with a system has been obtained, schedules are prepared by the NWS Office of Systems Operations Engineering Division. Tentative schedules are prepared for new equipment. These are then distributed to all electronics technicians and to those stations having that particular equipment. The effectiveness of the schedule is then monitored through the Engineering Management Reporting System (EMRS). Reports of component failures and system reliability then form the basis for any required revision found necessary. Maintenance schedules form an important aspect of the maintenance program and have a significant effect upon the establishment of workload standards and the development of various staffing and dispersion criteria.

As a technician's equipment responsibility periodically changes, he/she should ensure that copies of all available maintenance schedules are on hand for ready reference. Copies of missing schedules should be requested from the NLSC.

MAINTENANCE SCHEDULE INDEX - RIVER GAGES

Date of Issue	Title
April 12, 1976	Revised Maintenance Schedule for Weather Service-Owned Fischer & Porter Analog-Digital Recorder (ADR)
April 6, 1976	Revised Maintenance Schedule for Resistance River Gage, Types A, D, and E
November 18, 1983	Errata Sheet No. 1 to Maintenance Schedule for Weather Service-Owned Fischer and Porter Analog Digital Recorder (ADR)

Maintenance schedules for the Binary Decimal Transmitters and Telemark River Gages have been deleted.

U.S. DEPARTMENT OF COMMERCE
National Oceanic and Atmospheric Administration
NATIONAL WEATHER SERVICE
Silver Spring. Md. 20910

W/OTS141 - BGM

November 18, 1983

TO: All NWS Regional Headquarters, Area Electronics Supervisors, and Electronics Technicians (EHB-10) Distribution

FROM: W/OTSl - J. Michael St. Clair for Duane E. Ford

SUBJECT: Transmittal Memorandum for Engineering Handbook No. 10, Issuance 83-5

1. Material Transmitted:

Engineering Handbook No. 10, Hydrologic Equipment, Section 4.1; Errata Sheet No. 1 to subject Maintenance Schedule for Weather Service-owned Fischer and Porter Analog-Digital Recorder (ADR).

2. Summary:

Errata Sheet No. 1 instructs the electronics technicians to make a pen and ink change to the maintenance schedule for Weather Service-owned Fischer and Porter Analog-Digital Recorder (ADR).

3. Effect on Other Instructions:

None.

EHB-10
Issuance 83-5

U.S. DEPARTMENT OF COMMERCE
National Oceanic and Atmospheric Administration
NATIONAL WEATHER SERVICE
Silver Spring, Md. 20910

W514

APR - 0 1976

SUBJECT: Transmittal Memorandum for Engineering Handbook No. 10, issuance 76-2

TO : All Regional Headquarters Electronic Program Officers, and Electronics Technicians

1. Material Transmitted:

Engineering Handbook No. 10 - Hydrologic Equipment, Section 4.1; Revised Maintenance Schedule for Weather Service-owned Fischer & Porter Analog-Digital Recorder (ADR).

2. Summary:

This maintenance schedule has been prepared for the use of all personnel in the maintenance of Weather Service-owned Fischer & Porter ADR River Gage Recorders. It comprises the minimum periodic checking and servicing considered necessary to assure dependable operation. One semiannual visit should be scheduled prior to the spring flood season, the other in the fall. Because a DARDC Responder or a BDT is connected to this gage, plans should be made to service this telemetering equipment at the same time.

3. Effect on Other Instructions:

This issuance supersedes "Maintenance Schedule for Weather Bureau-owned Fischer & Porter Analog-Digital Recorder (ADR), " dated March 21, 1969, which should be discarded.

Merritt N. Techter
Associate Director, Technical Services, W5

AMERICAN REVOLUTION BICENTENNIAL 1776-1976

U. S. DEPARTMENT OF COMMERCE
NATIONAL OCEANIC AND ATMOSPHERIC ADMINISTRATION
NATIONAL WEATHER SERVICE
SILVER SPRING, MD. 20910

April 12, 1976

Office of Technical Services
Engineering Division

W514

MAINTENANCE SCHEDULE FOR WEATHER SERVICE-OWNED FISCHER & PORTER ANALOG-DIGITAL RECORDER (ADR)

(FOR ELECTRONICS TECHNICIAN)

DAILY

What to Check	How to Check	Precautions & Remarks
1. Station Log	Take corrective action on reported malfunctions.	Note: Since all ADR's are connected to telemetering BDT's or DARDC's, a reported malfunction could be either in the DARDC, BDT or the ADR.

SEMIANNUAL

1. General Condition of Equipment	Make visual check on condition of ADR upon arrival at site.	Perform ADR and BDT or DARDC maintenance on the same trip.
	(a) Check ADR code disc reading and punched tape for agreement with river gage.	If ADR disagrees with the river gage, make further check with wire weight gage (if available). If ADR is in error, take corrective action and readjust ADR. If river gage (Geological Survey or Corps of Engineers) is off, notify the appropriate agency. If code disc and punched tape reading disagree, take corrective action.

SEMIANNUAL

What to Check	How to Check	Precautions & Remarks
	(b) Check tape time for reasonable agreement with local time.	If time is off, timer may be defective or tape may be slipping on sprocket.
	(c) Check tape for clean punches. Initiate a manual punch cycle and watch action closely for signs of trouble.	If punch adjustment needed, refer to Instruction Bulletin 35-1540-1, Part Three, Service and Alignment.
2. Cleaning of Equipment	Wipe off dust and dirt from surfaces of ADR. Use small brush to remove dirt from inside the unit.	Remove oil and grease from all gear surfaces except detent wheel and locking lever.
3. Lubrication	Apply, if necessary, a small amount of graphite grease or Lubriplate to the detent wheel and locking lever. Other gear surfaces do not require lubrication.	
4. 7-1/2 Volt Battery	Replace battery on every semiannual inspection.	Replace battery with Eveready No. 1562 (WS S/N 17-B-2-11). The no load voltage of a fresh battery should be between 7-l/2 and 8 VDC depending on battery temperature. CAUTION: Connect red lead to plus (+) battery terminal. Indicate on the new battery: (1) Date of installation (2) Voltage reading, 30 ohm load (3) Voltage reading, no load

SEMIANNUAL

What to Check	How to Check	Precautions & Remarks
5. ADR Coded Output (Note: This is the same check as outlined in BDT maintenance schedule).	Uncouple the ADR from the gaging equipment using the following procedure:	This check is similar to the BDT semiannual check 9(a) and should be performed at the same time.
	(a) Note ADR reading	
	(b) Make a pencil mark on the gaging tape and pulley.	Use the pencil mark as a guide when replacing the tape on the pulley. River level should change very little during maintenance so the ADR reading should be the same as before the tape was removed.
	(c) Remove tape from the pulley and carefully place it over a 6" or 7" piece of two by four wood positioned vertically behind the pulley. (Keeping the tape at approximately the same height as the pulley lessens the possibility of accidently disengaging the float in the well).	
	(d) The code discs are now free. Rotate the discs to obtain a reading of 99.99 and hold in position. Initiate a punch-out, listen and watch for any signs of difficulty or abnormal operation during the punch cycle. Check the tape for proper and clean punches.	

SEMIANNUAL

What to Check	How to Check	Precautions & Remarks
	(e) Repeat above procedure using 66.66, 44.44, and 22.22.	Take corrective action on any difficulty revealed in these checks.
6. Float and Line	Inspect the float, line and counterweight. Clear tangled or rubbing lines.	A flashlight will be needed. Use care to avoid unhooking the float.
7. Final Check	After completion of checks and maintenance, restore the equipment to normal operation. Be sure that the float line is replaced to agree with pencil mark on pulley and tape. Initiate a punch cycle for final check to verify ADR reading is correct. Synchronize the punched tape and timer according to Hydrologic Maintenance Note No. 25.	

U.S. DEPARTMENT OF COMMERCE
National Oceanic and Atmospheric Administration
NATIONAL WEATHER SERVICE
Silver Spring, Md. 20910

W514

APR 28 1976

SUBJECT: Transmittal Memorandum for Engineering Handbook No. 10, Issuance 76-1

TO : All Regional Headquarter, Electronic Program Officers, and Electronics Technicians

1. Material Transmitted:

Engineering Handbook No. 10 - Hydrologic Equipment, Section 4. 1; Revised Maintenance Schedule for Resistance River Gage, Types A, D and E.

2. Summary:

This maintenance schedule has been prepared for the use of all technical personnel in the maintenance of the Types A, D and E Resistance River Gages. It comprises the minimum periodic checking and servicing considered necessary to assure dependable operation. These semiannual checks should preferably be scheduled before the spring flooding period and in the fall. These gages use the d. c. Wheatstone bridge null balancing principle and are subject to large errors if the phone lines are transposed or if the equipment deteriorates. Consequently, it is important that the calibration checks and adjustments in this schedule are carefully done.

3. Effect on Other Instructions:

This issuance supersedes "Maintenance Schedule for Resistance River Gage, Types A, D, and E, " dated November 20, 1968, which should be discarded.

Merritt N. Techter
Associate Director, Technical Services, W5

AMERICAN REVOLUTION BICENTENNIAL 1776-1976

U. S. DEPARTMENT OF COMMERCE
NATIONAL OCEANIC AND ATMOSPHERIC ADMINISTRATION
NATIONAL WEATHER SERVICE
SILVER SPRING, MD. 20910

Office of Technical Services
Engineering Division

April 6, 1976
W514

MAINTENANCE SCHEDULE FOR RESISTANCE RIVER GAGE, TYPES A, D AND E
(FOR ELECTRONICS TECHNICIAN)

SEMIANNUAL

What to Check	How to Check	Precautions & Remarks
1. Overall Appearance	Check transmitter site for overall general condition. Clean site and equipment.	Report any vandalism or USGS equipment failure to USGS.
2. Preliminary Calibration Check	Compare Veeder-Root reading with standard USGS gaging equipment at the site.	Any discrepancy may be due to beaded chain slipping, leaking float or tangled lines.
3. Float and Line	Make a close inspection, with a light, of the float, line and counterweight. Straighten tangled or rubbing lines. Check alarm line also if installed.	Use care to avoid unhooking the float.
4. Transmitter Shaft Bearings	Note Veeder-Root counter reading, mark beaded chain and pulley; carefully remove chain from pulley and support it so that it is free from moving parts. Disconnect potentiometer from transmitter shaft (note Veeder-Root count) and spin pulley lightly for a few times. Pulley should turn freely. Reconnect potentiometer to pulley (set pulley to above Veeder-Root reading).	Use care to avoid unhooking float. Replace bearings if drag is evident.

SEMIANNUAL

What to Check	How to Check	Precautions & Remarks
5. Potentiometer Alignment Check	Rotate pulley until Veeder-Root counter reads 00.0. Potentiometer should be at its clockwise limit (shaft end). Rotate pulley in opposite direction 40 turns. Potentiometer should be at its counterclockwise limit. Note: If gage is adjusted to read below 0 stage, see par. 3.2.3 (E manual), 3.2.4 (A or D manual) for instructions.	Use extreme care to avoid slamming potentiometer against its stop. Adjust potentiometer to agree with Veeder-Root counter. Refer to manual, par. 2.1.2 for adjustment instructions.
6. Transmitter Decals	Check for presence of decal on transmitter indicating how to interpret Veeder-Root counter reading (see par. 3.2.4 of instruction manual). If one is not present, obtain the correct decal from W514.	Decal information appears only in the E manual, par. 3.2.4; however, decals should be installed on all types of resistance gages.
7. Indicator Battery Check	Check terminal voltage of battery. Replace if below 3.0 volts for models A & D, 6.0 volts for model E.	Replace battery if it has been in service over one year.
8. Indicator Calibration	Set transmitter and indicator to their LOW check points. Obtain "COARSE" then "FINE" null reading. Readings obtained should agree with those listed below according to the range of the system.	Be sure to use "COARSE" reading before "FINE" reading to avoid indicator damage.

SEMIANNUAL

What to Check	How to Check	Precautions & Remarks
	NOTE: This check should be made preferably using two men, one at transmitter site and one at the indicator site. Sound powered phones or walkie-talkie radios should be used for communication (refer to par. 3.1.1 in instruction manual).	

RANGE OF GAGE	STAGES	TRANSMITTER LOW CHECK POINT	INDICATOR LOW CHECK POINT	TRANSMITTER HIGH CHECK POINT	INDICATOR HIGH CHECK POINT
40'	0 to 40'	020	02.0	380	38.0
60'	0 to 60'	020	03.0	380	57.0
80'	0 to 80'	020	04.0	380	76.0

NOTE: For gages reading stages lower than 00.0' see par. 3.2.3 of "E" manual, 3.2.4 of "A" & "D" manual.

	If indicator readings do not agree with transmitter readings, use one of the procedures listed below.	Look for defective or transposed lines.
	(a) If readings are far off, perform trouble shooting procedures as described in par. 5.3.3 of the instruction manual.	
	(b) If readings are close, adjust L and/or H balancing adjustments as described in par. 3.2.1 of the manual.	

SEMIANNUAL

What to Check	How to Check	Precautions & Remarks
9. Setting Pulley to Stage	Set pulley to Veeder-Root reading noted in step 4 and carefully replace beaded chain as marked. Note: If river stage has changed during maintenance period, the pulley and chain must agree with the new stage. Be sure chain bead is in pulley depression.	Set pulley and chain to agree with the USGS gage.
10. Final Indicator Check	Confirm indicator reading with transmitter, Veeder-Root reading and USGS gage indication.	
11. Alarm Gage Check (if installed)	(a) Check batteries. Replace any cells reading below 1.5 volts. Replace batteries yearly.	
	(b) With the "A" line grounded at the gage and alarm indicator toggle switch in ALARM position, red light should operate. If sound-powered phones are connected to this line, remove them and reconnect "A" line to alarm circuit.	If alarm does not operate, use troubleshooting procedure in par. 5.3.4 of model "A" & "D" Resistance River Gage Manual.
12. Gage Site	Check on general condition and ascertain that everything is working before leaving site.	

U.S. DEPARTMENT OF COMMERCE
National Oceanic and Atmospheric Administration
NATIONAL WEATHER SERVICE
Silver Spring, Md. 20910

May 25, 1976 W514

SUBJECT: Transmittal Memorandum for Engineering Handbook No. 10, Issuance 76-4

TO : All Regional Headquarters, Electronics Program Officers, and Electronics Technicians

1. Material Transmitted:

Engineering Handbook No. 10 - Hydrologic Equipment, Section 4.1; Revised Maintenance Schedule for Fischer & Porter Binary Decimal Transmitters.

2. Summary:

This maintenance schedule has been prepared for the use of all personnel in the maintenance of Fischer & Porter Binary Decimal Transmitters (BDT's). It comprises the minimum periodic checking and servicing necessary to assure dependable operation. Certain diode failures in the No. 2 bit circuitry in the Tone Generator Assembly of the Model 1014 BDT, or in the Decode and interlock Assembly of the Model 2000 BDT, can cause erroneous decimal readouts even though the BCD information is correct. The rather extensive checking procedures using 22.22, 44.44, 66.66, and 99.99 are necessary to uncover any hidden defects in the BDT.

3. Effect on Other Instructions:

This issuance supersedes "Revised Maintenance Schedule for Fischer & Porter Binary Decimal Transmitters," dated November 5, 1973, which should be discarded.

J.M. St. Clair
Chief, Engineering Division, W51

EHB-10
Issuance 76-4

U. S. DEPARTMENT OF COMMERCE
NATIONAL OCEANIC AND ATMOSPHERIC ADMINISTRATION
NATIONAL WEATHER SERVICE
SILVER SPRING, MD. 20910

April 29, 1976

Office of Technical Services
Engineering Division

W514

MAINTENANCE SCHEDULE FOR FISCHER & PORTER BINARY DECIMAL TRANSMITTER (FOR ELECTRONICS TECHNICIAN)

DAILY

What to Check	How to Check	Precautions & Remarks
1. Station Log	Take corrective action on reported malfunctions.	

SEMIANNUAL

1. Telephone Check	Call up BDT by phone before arrival at site.	Contact telephone company if there appears to be any telephone difficulty.? who
2. General condition of equipment	Make visual check on condition of all the equipment upon arrival at site.	
	(a) Check ADR code disc reading and punched tape for agreement with river gage. Check tape time for reasonable agreement with local time.	If ADR disagrees with river gage, make further check with wire weight gage. If discrepancy exists, notify responsible agency. If gage is WS-owned, take corrective action.
	(b) If BDT is connected to a precipitation gage, check code disc reading with punched tape for agreement. Check tape for reasonable agreement with local time.	Take corrective action on precipitation gage if discrepancy exists between code disc and tape or between tape time and local watch time.

SEMIANNUAL

What to Check	How to Check	Precautions & Remarks
3. BDT (Preliminary)	Initiate BDT manual readout and compare BDT output with ADR or precipitation gage reading. For manual readout on the 1014 BDT depress S601; for the 2000 series BDT depress S1 on the interlock assembly board.	Be sure to observe "Instructions for Resetting Digital Recorder Tape After Manual Interrogation" contained in Hydrologic Maintenance Note No. ~~25~~ 58
4. Clean equipment	Clean and dust off all equipment.	CAUTION: Do not tilt the BDT with power on to avoid shorting of mercury relays.
	Remove BDT cover, remove scanner board and clean printed circuit carefully with a clean cloth.	Use a small brush to clean dirt from under the wiper brushes.
5. Scanner Brush Assembly	Check for alignment and wear by sighting along the end of the brushes where they make contact.	Carefully realign or replace brush assembly as required. If a spare scanner board is available, replace the board and rework brush assembly at headquarters station.
6. 7-1/2 Volt Battery	Replace battery every 6 months.	Replacement of the battery is required if voltage reading is less than 6.5 volts when loaded with the 30-ohm resistor, or if battery has been in service 6 months. Replace battery with Eveready No. 1562 or equal type (WS S/N 17-B-2-11). No load voltage of a fresh battery should be between 7-1/2 to 8V dc depending on battery temperature.

SEMIANNUAL

What to Check	How to Check	Precautions &, Remarks
		CAUTION: Connect Red Lead to Plus (+) battery terminal. Indicate on the new battery: (1) the date of installation (2) voltage reading, loaded (3) voltage reading, no load.
7. Batteries furnished by cooperating agency	Remove one battery lead and check with 30-ohm load resistor similar to Step 6 above. If difference between loaded and unloaded conditions is more than 0.3 volt, notify cooperating agency.	To avoid disturbing tape record, do not remove lead and check when ADR is ready to punch. Be sure to replace lead after check.
8. 45 or 22-1/2 Volt Battery in Weather Service -owned Telephone Coupler, or 27-30 volt battery combination in Code-a-phone adapter.	Replace battery every 6 months.	A 45-volt battery is used in the Kellogg Coupler. Same battery, but only 22-l/2 volts is used on the Western Electric coupler. Replace with any of the following types: Burgess 6308, RCA VS112, RAY-0-VAC No. 709 (WS S/N 17-B-2-26). See maintenance note No. 39 for battery types required for Code-a-phone adapter.
9. BDT Telemetering Function (complete). Note four alternatives:		

SEMIANNUAL

What to Check	How to Check	Precautions & Remarks
(a) If ADR is WS-owned, or if cooperating agency does not object to adjustment of their equipment.		
(b) Check for 1014 BDT only.		
(c) Check for 2000 series BDT only.		
(d) If F&P Precipitation gage is connected to BDT.		
(a) WS-owned ADR	Uncouple the ADR from the gaging equipment using the following procedure: 1. Make a pencil mark on the gaging tape and the pulley. 2. Remove tape from the pulley and carefully place it over a 6" or 7" piece of two by four wood positioned vertically behind the pulley.	If proper readings are not obtained, troubleshoot telemetering contacts and BDT. If readings are correct, replace the tape on the pulley using the pencil marks for alignment. To troubleshoot bad "bits" initiate a punch-out containing the suspected "bits", remove battery power immedately after punch-out has occurred (before completion

SEMIANNUAL

What to Check	How to Check	Precautions &, Remarks
	(Keeping tape at approximately the same height as the pulley lessens the possibility of accidentally disengaging the float in the well.)	of punch cycle) and check for contact continuity. Remove and replace individual memory cards to locate trouble in BDT.
	The code discs are now free. Rotate discs to obtain a reading of 99.99 and hold in position. Initiate manual punch-out. Actuate the BDT and listen for 99.9 (99.99 for four-digit BDTs). Rotate discs to a 66.66 reading and hold in position. Initiate punch-out, then actuate BDT and listen for 66.6 (66.66 for four-digit BDTs). Repeat the above procedure for a reading of 44.44 and then for 22.22. This checks all telemetering contacts and BDT memories. After completion of checks and maintenance, restore equipment to normal operation and synchronize tape and time according to Hydrologic Maintenance Note No. 25.	Diode failure in the .2, 2 or 20 bit circuits of the Tone Generator board (Model 1014 BDT) or the Decode and Interlock board (Model 2000 BDT) can cause incorrect readout even though the BCD information is correct. The revised checks listed here will uncover any defects.
(b) 1014 BDT only	For 1014 BDT - (does not check ADR telemetering contacts) - connect loudspeaker assembly (WS S/N D550-LS201B) to TB4-W and X. Lift the	Make this check between ADR punch-outs. Listen for clearing of relays. If incorrect readout is obtained, locate defective memory board

SEMIANNUAL

What to Check	How to Check	Precautions & Remarks
	ADR-BDT connecting lead from BDT terminal board TB3-2 (to prevent unintentional ADR punch-out). Short BDT terminals TB3-5, 4 and 3 together momentarily (3 seconds) to clear memory.	and replace with spare board.
	Momentarily ground BDT terminals TB1-. 2, TB1-2, and TB-20. Initiate a readout with switch 5601 and listen for a readout of 22.2. Reset memory coils again by shorting TB3-3, 4 and 5 for 3 seconds. Ground terminals TB1-.4, TB1-4 and TB2-40. Initiate a readout and listen 44.4. Repeat the same procedure for a readout of 66.6 (BCD 2 and 4) and for 99.9 (BCD 1 and 8). These checks test all the memory relays. Reconnect ADR-BDT connecting lead at TB3-2 and replace the BDT cover.	Ground each terminal for about 3 seconds to assure relay operation.
(c) 2000 Series	For Model 2010 (3-digit) or 2020 (4-digit) BDTs - (does not check ADR telemetering contacts) - the series 2000 BDT does not generate a tone, only a dry contact relay operation. It is necessary to use an auxiliary sounding device such as the Mallory "Sonalert" (WS S/N D550-A206D) to check the output of the BDT.	Make this check between ADR punch-outs.

SEMIANNUAL

What to Check	How to Check	Precautions & Remarks
	Connect the Sonalert as follows: 1. Disconnect the radio or phone keying lines (whichever is appropriate) from TB-4 and N or P. 2. Connect the Sonalert (+) terminal to TB4(+). Connect Sonalert (-) to TB4-P. Jumper TB4-R to TB4-(-).	
	To clear the memory relays (reset) disconnect the ADR or PTG telemetering lead from BDT TB3-C. Apply 7.5 volts positive (+) from TB4-(+) to TB3-C momentarily (about 3 seconds) with a jumper lead.	Listen for memory relay clearing action.
	Then with a jumper lead connected to the chassis ground, momentarily ground terminals TB1-.02, TB1-.2, TB2-2, and TB2-20. Depress S-1 to start scanning and listen for 22.22 output from the Sonalert. For a model 2010 3-digit BDT, eliminate the grounding of the .02 terminal. Output should then be 22.2.	Listen for individual relay operation or hold connection for about 3 seconds to assure operation.
	Reset the memory relays and then ground .04, .4, 4 and 40 (for 4-digit BDT) or .4, 4 and 40 (for 3-digit BDT).	If incorrect readout is obtained, locate defective memory board and replace with spare board.

SEMIANNUAL

What to Check	How to Check	Precautions & Remarks
	Depress S-1 and listen far 44.44 or 44.4, whichever is appropriate. Repeat the same procedure for a readout of 66.66 (BCD2 and 4), and for 99.99 (BCD 1 and 8). These checks test all the memory relays. Disconnect the Sonalert device, remove the jumper from TB4-R and (-), replace the telephone or radio lines on TB4-R, N or P (whichever is appropriate), and replace the telemetering lead on TB3-C. Replace the BDT cover.	
(d) F&P Precipitation Gage connected to BDT.	Rotate the F&P precipitation gage code disc to a reading corresponding to 9.9 and hold in position. Initiate a punch-out and after punch-out is completed actuate a BDT readout (S601 on 1014 and S1 on 2000 series). Listen for a readout of 9.9 from the BDT. Rotate the code disc to a reading of 12.2 and repeat the above procedure. Listen for a readout of 12.2. Repeat the above procedure for a readout of 14.4, and 16.6. These checks verify operation of all telemetering contacts and BDT memory relays. These checks also verify interlock circuit operation. After completion	If proper readings are not obtained, troubleshoot telemetering contacts and/or BDT.

SEMIANNUAL

What to Check	How to Check	Precautions &, Remarks
	of checks and maintenance, restore equipment to normal operation and synchronize tape and timer.	
10. Entire System	Call the telephone operator and inform that: "This telephone number (see dial face) ----------has an automatic answering device connected to it. I would like to test its operation. Please call me back and listen to the tones (beeps) until they stop. The complete cycle will take less than a minute. Thank you." Place telephone back "on hook". After the BDT has stopped, call the operator back and check with her on the quality of the call. If operator says transmission is 0. K., maintenance is complete. Disconnect speakers or headphones (including 401H special phone jack). Check equipment for proper calibration, operation, and tape synchronization. Check that all entries are made on forms that may be required for other agencies, all equipment secured, and that gage house is locked on departure.	Transmission can be monitored on 1014BDT by external speaker. If a 401H Data Set is used, high impedance headphones and special telephone jack can be used for monitoring (see Maintenance Note No. 14, Interface Module, BDT to 401H Data Set). 2000 series BDT cannot be monitored during transmission unless connected to a 401H Data Set.

U.S. DEPARTMENT OF COMMERCE
National Oceanic and Atmospheric Administration
NATIONAL WEATHER SERVICE
Silver Spring, Md. 20910

May 26, 1976

W514

SUBJECT: Transmittal Memorandum for Engineering Handbook No. 10, Issuance 76-5

TO : All Regional Headquarters, Electronics Program Officers, and Electronics Technicians

1. Material Transmitted:

Engineering Handbook No. 10 - Hydrologic Equipment, Section 4.1; Revised Maintenance Schedule for Telemark River Gages.

2. Summary:

This maintenance schedule has been prepared for the use of all personnel in the maintenance of Telemark River Gages. It comprises the minimum periodic checking and servicing considered necessary to assure dependable operation. In many instances, it is possible to count on one set of batteries lasting a full year with the Telemark. However, with the increased cost of travel, it is more economical to replace them every 6 months.

3. Effects on Other Instructions:

This issuance supersedes "Maintenance Schedule for Telemark River Gages," dated July 2, 1968, which should be discarded.

J. M. St. Clair

J. M. St. Clair
Chief, Engineering Division, W51

EH B-10
Issuance 76-5

U. S. DEPARTMENT OF COMMERCE
NATIONAL-OCEANIC AND ATMOSPHERIC ADMINISTRATION
NATIONAL WEATHER SERVICE
SILVER SPRING, MD. 20910

April 28, 1976

Office of Technical Services
Engineering Division

W514

MAINTENANCE SCHEDULE FOR TELEMARK RIVER GAGES
(FOR ELECTRONICS TECHNICIAN)

DAILY

What to Check	How to Check	Precautions & Remarks
1. Station Log	Take corrective action on reported malfunctions.	

SEMIANNUAL

1. Batteries	Replace with new Burgess 4F2H batteries (WS S/N 17-B-2-15) every 6 months.	Be sure that proper battery polarity is maintained. Drive sprocket should rotate clockwise viewed from above.
2. Drive Motor	Remove brush holder plates and blow out all carbon dust. Replace motor brushes if they are 1/4 inch or shorter.	
3. Rotating Bearings	Wipe clean and oil with one or two drops of very light machine oil (WS S/N 14-O-9 or equal).	Be sure that all gritty dirt is removed before oiling.
4. Carriage Drive Chain	If chain is sagging, tighten tension screw until sag disappears.	Do not stretch chain.

EHB-10
Issuance 76-5

SEMIANNUAL

	What to Check	How to Check	Precautions Remarks
5.	Relay Contacts	Clean by inserting a piece of stiff clean paper dipped in contact cleaner. Burnish back and forth until contacts are clean.	Do not file contacts.
6.	Buzzer	Check for proper operation and tone.	Adjust if necessary for purest tone.
7.	Microswitch	Check for smooth operation over drums.	Adjust if necessary. Refer to instruction manual, page 12.
8.	Clean	Dust off equipment. Sweep out dead flies, bugs, etc.	Recommend Shell Pest Strip or similar type device.
9.	Calibration	Compare Telemark reading with other gage readings at the site. Correct as necessary.	

MAINTENANCE SCHEDULE INDEX - PRECIPITATION GAGES

Date of Issue	Title
April 30, 1976	Revised Maintenance Schedule for Fischer & Porter Punched Tape Precipitation Gage
August 13, 1982	Maintenance Schedule for Standard 12-inch Tipping Bucket Rain Gages

U.S. DEPARTMENT OF COMMERCE
National Oceanic and Atmospheric Administration
NATIONAL WEATHER SERVICE
Silver Spring, Md. 20910

June 4, 1976

W514

SUBJECT: Transmittal Memorandum for Engineering Handbook No. 10, Issuance 76-6

TO : All Regional Headquarters, Electronics Program Officers, and Electronics Technicians

1. Material Transmitted:

Engineering Handbook No. 10 - Hydrologic Equipment, Section 4.2; Revised Maintenance Schedule for Fischer & Porter Punched Tape Precipitation Gage,

2. Summary:

This maintenance schedule has been prepared for the use of all personnel in the maintenance of all models of the Fischer & Porter punched tape precipitation gages. It comprises the minimum periodic checking and servicing considered necessary to assure dependable operation, Daily and monthly duties performed by Cooperative Observers at some sub-stations, are discussed in another Weather Service pamphlet entitled "Observer Instructions for Punched Tape Rain Gage (Model 1559, Series A2) with Electronic Timer."

3. Effect on Other Instructions:

This issuance supersedes "Revised Maintenance Schedule for Fischer & Porter Punched Tape Precipitation Gage," dated October 15, 1974, which should be discarded.

Richard T. Wiggen for
Merritt N. Techter
Associate Director, Technical Services, W5

EHB-10
Issuance 76-6

U. S. DEPARTMENT OF COMMERCE
NATIONAL OCEANIC AND ATMOSPHERIC ADMINISTRATION
NATIONAL WEATHER SERVICE
SILVER SPRING, MD. 20910

Office of Technical Services
Engineering Division

April 30, 1976

W514

MAINTENANCE SCHEDULE FOR FISCHER & PORTER MODELS 1548 and 1559(d.c.)
PUNCHED TAPE PRECIPITATION GAGE
(FOR ELECTRONICS TECHNICIAN OR SUBSTATION NETWORK SPECIALIST)

NOTE: Daily and Monthly duties, performed by a Cooperative Observer, are discussed in Weather Service Pamphlet "Observer Instructions for Punched Tape Rain Gage (Model 1559, Series A2) With Electronic Timer."

SEMIANNUAL

What to Check	How to Check	Precautions & Remarks
1. Overall Appearance	Observe paint finish, or evidence of vandalism.	Clean oil film from the outside of gage using GSA nonflammable liquid detergent FSN 7930-926-5280.
2. Weather Stripping around Base Plate and Door.	Check for breaks or general deterioration. Weather Stripping is used around Base Plate of the Model 1558 and 1559 gages only.	Replace as needed: Weather Stripping or Door Gasket, (WS S/N D111A-MS100.) (Cut base plate weather stripping about 50" in length.)
3. Collection Bucket	The collection bucket is to be emptied whenever a reading in excess of 10 inches is observed.	Remove any foreign material in the collection bucket and clean. Make zero check (Step 4) before charging collection bucket.
a. Emptying and Charging Collection Bucket	Collection bucket is charged for warm weather operation by adding approximately one quart of SAE 10, nondetergent or multi-viscosity oil to retard evaporation.	SAE1O, nondetergent oil available at CLSC in quart cans (WS S/N 014-0-15.)

SEMIANNUAL		
What to Check	How to Check	Precautions & Remarks
b. Charging Collection Bucket - Cold Weather Operation	When collection bucket is emptied and charged for cold weather operation, add two quarts of pre-mixed antifreeze and oil.	Antifreeze, ethylene glycol base, (WS S/N 052-A-3). Less anti-freeze may be required if temperature is mild and precipitation expected to be light. Pre-mixed antifreeze and oil in quart cans (WS S/N 052-A-5) available at CLSC.
4. Code Disk Pointer and Punched Value agree	Inspect tape.	Record any difference between code disk pointer reading and punched value on tape. Note: Difference probably caused by improper setting of zero pointer. See Step 5.
5. Zero Adjust	Rotate the zero adjust knob, until punched tape value is reading zero with the collection bucket on and empty. Reset Zero Pointer if needed.	Refer to instruction Bulletin 35-1558-1 or 35B1558 Section F - Alignment for zeroing instructions.
6. Force Post	Check that the Force Post Key #155 is tightly screwed into the Support Arm, Key#153.	
7. Funnel	During the period of year when snow or freezing weather is expected, remove funnel from the hood and store.	Reinstall after cold weather season.
8. Recording Tape	Remove recorded portion of tape. Decal mounted inside gage door contains instruc-tions for removing and replacing tape.	

SEMIANNUAL			
	What to Check	How to Check	Precautions & Remarks
9.	Punched Tape Supply Roll	Observe that the tape supply is adequate until the the next visit.	Replace when the tape supply spool assembly indicates 30-day supply or less. If marked spool is not used, the red stripe on tape indicates 30 days or less supply.
10.	Battery Voltage, 7-1/2 Volts	Replace battery every six months.	Replacement of the battery is required if voltage reading is less than 6.5 volts when loaded with the 30-ohms resistor, or if battery has been in service six months. Replace battery with Eveready #1562 or equal type, (WS S/N 017-B-2-11). No load voltage of a fresh battery should be between 7-1/2 to 8 volts depending on its temperature. CAUTION: Connect red lead to plus (+) battery terminal. Indicate on the new battery: (1) The date of installation. (2) Voltage reading, (3) Voltage reading,
11.	Electronic Timer	No maintenance required. See Instruction Bulletin (P) 35-9010 for operation instructions.	

		SEMIANNUAL
	What to Check	How to Check
12	Mechanical d.c. Timer Assembly-Cam Follower and Switch Adjustment	Slowly rotate the timing cam clockwise until the cam follower switch is just closed, (the punch motor operates and advances the recording tape to the next increment). Observe number of minutes prior to the cam follower arm drop-off point for each timing cam ramp. This point on the ramp is the "Recock" position (prior to punch out) of the cam follower microswitch. Examine surface of each timing cam ramp for rough edges. App1 a very thin coating of Dow Corning #33 Silicone lubri on edge of cam.
13.	Drag on the Ergas Type Timer	On some Ergas Timers, the shaft bushing or the threa ed boss of the timer has protruded out too far and caused a drag on the timin cam. Check for this condit
14.	Tape Punching	Timer synchronization-Observe a portion of the punched tape; closely spaced punches every so often, or incompletely punched holes are indications of malfunction.

SEMIANNUAL

What to Check	How to Check	Precautions & Remarks
15. Telemetering Contacts	Set up the following values on the code disc, and tape the disc in place. Actuate a punchout cycle. Remove battery power immediately after punchout has occurred. With ohmmeter observe if there is a continuity between terminal B- and the telemetry terminals indicated in the following chart: AT DIAL READING — TELEMETER CONTACTS 0.0 — NONE 1.8 — 1 & .8 4.5 — 4,.4 & .1 6.2 — 4, 2 & .2 8.1 — 8 & .1 12.6 — 10, 2, .4 & .2	For the 6.2 inch reading, one 9 lb. weight (4111 grams), equal to 5 inches of precipitation, should be placed in bucket. The code dies should then be advanced the additional 1.2 inches by hand and taped in place. For the 12.6 inch reading, two 9 lb. weights, equal to 10 inches of precipitation, should be placed in the bucket. The code disc should then be advanced the additional 2.6 inches by hand and taped in place.
16. Contacts of Punch Motor Switch Assembly	Check for pitting or misalignment of contacts. Clean switch contacts with a chemical cleaner and wipe with bonded paper. Note: New switch available from CLSC, same stock number, is a microswitch. It does not require this servicing.	Replace as needed, (WS S/N D111-A151.) Contact Cleaner "No-Noise: (WS S/N 052-C-7).
17. Punch Arm Cam Follower	Inspect the punch arm actuating cam for signs of wear. Check the punch arm cam follower for older roller type.	Reference Hydrologic Gaging System Maintenance Note #19. Replace roller type punch arm cam follower (1548 gages only).

SEMIANNUAL			
	What to Check	How to Check	Precaution & Remarks
18.	Gage Levelling	Lay carpenter's level across the open top of the gage (orfice) in two directions at right angles to each other.	Take corrective action if necessary. A gage that is not level will give erroneous readings.

ANNUAL			
1.	Dashpot Oil	Check that the dashpot cylinder is filled and that plunger stem is not bent.	Refill only with special type damping oil. (WS S/N D111-MS111).
2.	Calibration		Refer to Instruction Bulletin 35-1558-1, or 35B1559, Par. F, (Preparation for Service) for procedure. Also, Maintenance Bulletin. 35-9009 (EHBlO-206) Section A.
	a. Zero Adjustment	Empty the collection bucket and replace on force post.	Refer to Instruction Bulletin 35-1558-1, *or* 35B1558, Figure #7, for location.
	b. Span Adjustment	Perform Step 2a first. (Page 6, Par. F, of Bulletin 35-1558-1 or Page 8 of Bulletin 35B1558). Use 3 ea. 4111 G weights.	Install calibration weights slowly, so as not to cause undue stress on the weighing mechanism.
	C. Linearity and Sensitivity Check	Check should be made at the following points, both up scale and down again.	Perform sensitivity checks, if possible, when wind is light. Be sure flexures are not bent. Replace if damaged. Refer to

ANNUAL			
What to Check		How to Check	Precautions & Remarks
			Maintenance Bulletin 35-9009 (EHB10-206), Section A.
Check Points	Weights	Used Scale Reading(±0.1)	Punched Tape Reading ±0.1
0	0	0	0
5-in	1 ea 4111 .G	5	5
10-in	2 ea 4111 .G	10	10
15-in	3 ea 4111 .G	15	15
19-in	1 ea 3289 .G 3 ea 4111 .G	19	19
15-in	3 ea 4111 .G	15	15
10-in	2 ea 4111 .G	10	10
5-in	1 ea 4111 .G	5	5
0	0	0	0

The sensitivity check is made by adding the 20.56 grams weight to each check point and noting if the scale reading deflects a preceptible amount.

The 20.56 gram weight equals 0.025 inches of water, the minimum gage sensitivity.

UNITED STATES DEPARTMENT OF COMMERCE
National Oceanic and Atmospheric Administration
NATIONAL WEATHER SERVICE
Silver Spring. Md. 20910

August 13, 1982

OA/W5141 - CM

TO: All NWS Regional Headquarters, Area Electronics Supervisors, Electronics Technicians, and Cooperative Program Managers (EHB-10 Distribution)

FROM: OA/W51- J. Michael St. Clair

SUBJECT: Transmittal Memorandum for Engineering Handbook No. 10, Issuance No. 82-2

1. Material Transmitted:

Engineering Handbook No. 10, Hydrologic Equipment, Section 4.2; Maintenance Schedule for Standard 12-Inch Tipping Bucket Rain Gages.

2. Summary:

This maintenance schedule provides instructions for Maintenance and Calibration Checks of Standard 12-Inch Tipping Bucket Rain Gages.

Two copies of the Meteorological Technician portion, printed on GREEN paper, and one copy of the El Tech portion, printed on YELLOW paper, are attached to each copy of the transmittal memorandum. One copy of the Meteorological portion of the schedule should be detached and given to the HIC,MIC/OIC to be inserted in the Station Duty Manual (SDM), Volume 2.

3. Effect on Other Instructions:

None.

EHB-10
Issuance 82-2

Engineering Division
OA/W514

MAINTENANCE SCHEDULE FOR STANDARD 12-INCH TIPPING-BUCKET RAIN GAGE

(For Meteorological Technicians)

NONROUTINE		
What to Check	How to Check	Precautions & Remarks
Compare the tipping bucket output to stick measurement.	The stick measurement should not exceed the tipping-bucket registered amounts by more than 3 percent for light rain, 6 percent for moderate rain, or 10 percent for heavy rain.	Check for damage, excess friction on the tipping-bucket, or bad wiring. Notify el tech, if necessary.
MONTHLY		
Pivot and Bearing Surfaces	Clean and lubricate the bearings. Apply a drop of oil on each bearing.	Use SAEl0, or anemometer oil.
ANNUAL		
Check the level of the gage.	Using a spirit level check that the collector ring is level.	Loosen the screws attaching the support legs to the support ring. Reposition the collector ring until level, then tighten screws.
Clean the tipping bucket.	Using a mild scouring agent remove accumulated dust, dirt, etc.	

Engineering Division
OA/W514

MAINTENANCE SCHEDULE FOR STANDARD 12-INCH TIPPING-BUCKET RAIN GAGE

(For Electronics Technicians)

ANNUAL

What to Check	How to Check	Precautions & Remarks
1. Overall Appearance	Observe paint finish and check for corrosion. Check for evidence of vandalism or other damage.	Clean and repair any damages. Touch up paint, if needed.
2. Wiring, connectors, switches, and hardware.	Check the general condition of the wiring, connectors, switches, and hardware for corrosion and proper connections.	
3. Inspect the tipping-bucket,	Check the seams and fittings for corrosion and sound fit. The bucket should not leak between tipping-bucket collection chambers. Verify that all fittings are secure.	If defective, replace with assembly D120-2.
4. Check the tipping bucket calibration	The inside of each chamber should be wet as in normal operation. Using Pipet D120-TE1, fill each chamber alternately with water until it tips. The sum of the quantity of water required for the two chambers should be between 36.2 and 37.8 ml.	If defective, replace assembly D120-2.
5. Check the system for correct operation.	Cycle the tipping-bucket several times and check that the counter has advanced accordingly.	Repair as needed.

U. S. DEPARTMENT OF COMMERCE
NATIONAL OCEANIC AND ATMOSPHERIC ADMINISTRATION
NATIONAL WEATHER SERVICE
SILVER SPRING, MD. 20910

Office of Technical Services
Engineering Division

April 30, 1976

W514

MAINTENANCE SCHEDULE FOR FISCHER & PORTER MODELS 1548 and 1559(d.c.)
PUNCHED TAPE PRECIPITATION GAGE
(FOR ELECTRONICS TECHNICIAN OR SUBSTATION NETWORK SPECIALIST)

NOTE: Daily and Monthly duties, performed by a Cooperative Observer, are discussed in Weather Service Pamphlet "Observer Instructions for Punched Tape Rain Gage (Model 1559, Series A2) With Electronic Timer."

SEMIANNUAL

What to Check	How to Check	Precautions & Remarks
1. Overall Appearance	Observe paint finish, or evidence of vandalism.	Clean oil film from the outside of gage using GSA nonflammable liquid detergent FSN 7930-926-5280.
2. Weather Stripping around Base Plate and Door.	Check for breaks or general deterioration. Weather Stripping is used around Base Plate of the Model 1558 and 1559 gages only.	Replace as needed: Weather Stripping or Door Gasket, (WS S/N D111A-MS1OO.) (Cut base plate weather stripping about 50" in length.)
3. Collection Bucket	The collection bucket is to be emptied whenever a reading in excess of 10 inches is observed.	Remove any foreign material in the collection bucket and clean. Make zero check (Step 4) before charging collection bucket.
a. Emptying and Charging Collection Bucket	Collection bucket is charged for warm weather operation by adding approximately one quart of SAE 10, nondetergent or multi-viscosity oil to retard evaporation.	SAE1O, nondetergent oil available at CLSC in quart cans (WS S/N 014-0-15.)

EHB-10
Issuance 76-6

SEMIANNUAL		
What to Check	How to Check	Precautions & Remarks
b . Charging Collection Bucket - Cold Weather Operation	When collection bucket is emptied and charged for cold weather operation, add two quarts of pre-mixed antifreeze and oil.	Antifreeze, ethylene glycol base, (WS S/N 052-A-3).. Less anti-freeze may be required if temperature is mild and precipitation expected to be light. Pre-mixed antifreeze and oil in quart cans (WS S/N 052-A-5) available at CLSC.
4. Code Disk Pointer and Punched Value agree	Inspect tape.	Record any difference between code disk pointer reading and punched value on tape. Note: Difference probably caused by improper setting of zero pointer. See Step 5.
5. Zero Adjust	Rotate the zero adjust knob, until punched tape value is reading zero with the collection bucket on and empty. Reset Zero Pointer if needed.	Refer to instruction Bulletin 35-1558-1 or 35B1558 Section F - Alignment for zeroing instructions.
6. Force Post	Check that the Force Post Key #155 is tightly screwed into the Support Arm, Key#153.	
7. Funnel	During the period of year when snow or freezing weather is expected, remove funnel from the hood and store.	Reinstall after cold weather season.
8. Recording Tape	Remove recorded portion of tape. Decal mounted inside gage door contains instructions for removing and replacing tape.	

SEMIANNUAL		
What to Check	How to Check	Precautions & Remarks
9. Punched Tape Supply Roll	Observe that the tape supply is adequate until the the next visit.	Replace when the tape supply spool assembly indicates 30-day supply or less. If marked spool is not used, the red stripe on tape indicates 30 days or less supply.
10. Battery Voltage, 7-1/2 Volts	Replace battery every six months.	Replacement of the battery is required if voltage reading is less than 6.5 volts when loaded with the 30-ohms resistor, or if battery has been in service six months. Replace battery with Eveready #1562 or equal type, (WS S/N 017-B-2-11). No load voltage of a fresh battery should be between 7-1/2 to 8 volts depending on its temperature. CAUTION: Connect red lead to plus (+) battery terminal. Indicate on the new battery: (1) The date of installation. (2) Voltage reading, loaded. (3) Voltage reading, no load.
11. Electronic Timer	No maintenance required. See Instruction Bulletin (P) 35-9010 for operation instructions.	

SEMIANNUAL

What to Check	How to Check	Precautions & Remarks
12. Mechanical d.c. Timer Assembly-Cam Follower and Switch Adjustment	Slowly rotate the timing cam clockwise until the cam follower switch is just closed, (the punch motor operates and advances the recording tape to the next increment). Observe number of minutes prior to the cam follower arm drop-off point for each timing cam ramp. This point on the ramp is the "Recock" position (prior to punch out) of the cam follower microswitch. Examine surface of each timing cam ramp for rough edges. Apply a very thin coating of Dow-Corning #33 Silicone lubricant on edge of cam.	The Recock Cycle for the Delrin 15-minute timing cam should occur about 5 to 7 minutes prior to cam follower drop off for all cam ramps. To alter the setting loosen the two screws and adjust microswitch assembly up or down as required. Drag on the Ergas d.c. timer should be minimized. Check each lobe for correct actuation.
13. Drag on the Ergas Type Timer	On some Ergas Timers, the shaft bushing or the threaded boss of the timer has protruded out too far and caused a drag on the timing cam. Check for this condition.	If drag is present, add special washers to shim the timing cam up so that there is about 1/32" clearance between cam and timer boss or collar.
14. Tape Punching	Timer synchronization - Observe a portion of the punched tape; closely spaced punches every so often, or incompletely punched holes are indications of malfunction.	(See Hydrologic Gaging Maintenance Note #25 dated October 10, 1968.) Replace sprocket assembly, or holder and die assembly. Adjust the punching pressure. Reference: Steps 5 and 6 of Hydrologic Maintenance Notes #19, dated July 28, 1966, and #54, dated December 14, 1972.

SEMIANNUAL

What to Check	How to Check	Precautions & Remarks
15. Telemetering Contacts	Set up the following values on the code disc, and tape the disc in place. Actuate a punchout cycle. Remove battery power immediately after punch-out has occurred. With ohmmeter observe if there is a continuity between terminal B- and the telemetry terminals indicated in the following chart: AT DIAL READING — TELEMETER CONTACTS 0.0 — NONE 1.8 — 1 & . 8 4.5 — 4,.4&.1 6.2 — 4,2&.2 8.1 — 8 & .1 12.6 — 10, 2, .4 &.2	For the 6.2 inch reading, one 9 lb. weight (4111 grams), equal to 5 inches of precipitation, should be placed in bucket. The code dics should then be advanced the additional 1.2 inches by hand and taped in place. For the 12.6 inch reading, two 9 lb. weights, equal to 10 inches of precipitation, should be placed in the bucket. The code disc should then be advanced the additional 2.6 inches by hand and taped in place.
16. Contacts of Punch Motor Switch Assembly	Check for pitting or misalignment of contacts. Clean switch contacts with a chemical cleaner and wipe with bonded paper. Note: New switch available from CLSC, same stock number, is a microswitch. It does not require this servicing.	Replace as needed, (WS S/N D111-A151.) Contact Cleaner "No-Noise: (WS S/N 052-C-7).
17. Punch Arm Cam Follower	Inspect the punch arm actuating cam for signs of wear. Check the punch arm cam follower for older roller type.	Reference Hydrologic Gaging System Maintenance Note #19. Replace roller type punch arm cam follower (1548 gages only).

SEMIANNUAL		
What to Check	How to Check	Precaution & Remarks
18. Gage Leveling	Lay carpenter's level across the open top of the gage (orfice) in two directions at right angles to each other.	Take corrective action if necessary. A gage that is not level will give erroneous readings.

ANNUAL		
1. Dashpot Oil	Check that the dashpot cylinder is filled and that plunger stem is not bent.	Refill only with special type damping oil. (WS S/N D111-MS111).
2. Calibration		Refer to Instruction Bulletin 35-1558-1, or 35B1559, Par. F, (Preparation for Service) for procedure. Also, Maintenance Bulletin< 35-9009 (EHBlO-206) Section A.
a. Zero Adjustment	Empty the collection bucket and replace on force post.	Refer to Instruction Bulletin 35-1558-1, or 35B1558, Figure #7, for location.
b. Span Adjustment	Perform Step 2a first. (Page 6, Par. F, of Bulletin 35-1558-l or Page 8 of Bulletin 35B1558). Use 3 ea. 4111 G weights.	Install calibration weights slowly, so as not to cause undue stress on the weighing mechanism.
C. Linearity and Sensitivity Check	Check should be made at the following points, both up scale and down again.	Perform sensitivity checks, if possible, when wind is light. Be sure flexures are not bent. Replace if damaged. Refer to

ANNUAL

What to Check	How to Check	Precautions & Remarks
		Maintenance Bulletin 35-9009 (EHBIO-206), Section A.

Check Points	Weights Used	Scale Reading (±0.1)	Punched Tape Reading ± 0.1)
0	0	0	0
5-in	1 ea 4111 .G	5	5
l0-in	2 ea 4111 .G	10	10
15-in	3 ea 4111 .G	15	15
19-in	1 ea 3289 .G 3 ea 4111 .G	19	19
15-in	3 ea 4111 .G	15	15
l0-in	2 ea 4111 .G	10	10
5-in	1 ea 4111 .G	5	5
0	0	0	0

The sensitivity check is made by adding the 20.56 grams weight to each check point and noting if the scale reading deflects a preceptible amount.

The 20.56 gram weight equals 0.025 inches of water, the minimum gage sensitivity.

MAINTENANCE SCHEDULE INDEX - TIDE GAGES

Date of Issue	Title

All special instrumentation maintenance schedules have been deleted.

MAINTENANCE SCHEDULE INDEX
AUTOMATIC HYDROLOGIC OBSERVING SYSTEM (AHOS)

Date of Issue	Title
	Maintenance Schedule for AHOS(T) - Refer to Instruction Manual Device for Automatic Remote Data Collection (DARDC) Model B, EHB7-803, Section 4