AUTOMATIC OBSERVING EQUIPMENT

Table of Contents

	Page	Section
1. Equipment Manuals	1	1.0
AUTOB APPENDIX	1	1.1
AMOS III-70		1.2
AMOS III-73	1	1.3
RAMOS		1.4
MED	1	1.5
2. Equipment Maintenance Notes	1	2.0
AUTOB	1	2.1
AMOS III-70/73	1	2.2
RAMOS	1	2.3
MED	1	2.4
ASCS		2.6
3. Equipment Modification Notes	1	3.0
AUTOB		3.1
AMOS III-70/73	1	3.2
RAMOS		3.3
MED	1	3.4
		3.6
4. Equipment Maintenance Schedules	1	4.0
AUTOB	1	4.1
AMOS III-70/73	1	4.2
RAMOS	1	4.3
MED	1	4.4

Equipment Manuals. Equipment or systems manuals are provided with each piece of operational equipment used in the National Weather Service (NWS) Each manual includes sufficient instructions so that technicians not familiar with the equipment can satisfactorily accomplish installation, necessary adjustments and calibration, activation, routine and emergency maintenance, and can easily identify components for ordering replacements. As a minimum, manuals contain information regarding (a) description and characteristics of the equipment; (b) siting and installation requirements; (c) activation, adjustment, and operation; (d) description of circuits utilized; (e) preventive and troubleshooting maintenance procedures, including resistance and voltage measurements and mechanical adjustments; (f) detailed circuit diagrams; (g) detailed parts list indicating parts numbers, together with electrical and mechanical descriptions.

Manuals are issued by the NWS Office of Systems Operations (OSO) Engineering Division, whenever new equipment is installed, when sufficient changes in manual material require a complete revision, or by request from authorized personnel whose responsibilities have changed, thus requiring their having access to additional technical material. Manuals will normally be revised when sufficient change in the material is brought about through equipment modification, change in technical procedures and from suggestions obtained from the field requesting clarification of vague or erroneous information.

Distribution of equipment manuals in the automatic observing program area is made on a selective basis. Normally only those electronics technicians actually maintaining the equipment will be issued manuals. One copy is provided with the equipment and remains in the custody of the station.

All equipment manuals will be numerically coded so as to be keyed to the appropriate program area handbook. The indexes contained in Part I for the various systems and equipment manuals indicate the numbers assigned to a particular manual. As new manuals are obtained, they will carry the coded number on the cover as a reference.

The recipient of equipment manuals will be responsible for their upkeep as regards filing of revised material and ensuring that they are current. Area electronics supervisors will periodically check electronics technicians' manuals for completeness and have them request any revisions that are missing. Request for manuals should be made through the regional headquarters Electronics Branch to the OSO Engineering Division (ATTN: W/OSO32). Manuals should be requested only for equipment under the technician's responsibility.

MANUAL INDEX - AUTOB

Number	Title
11-103(A-A59)	AUTOB Appendix

MANUAL INDEX - AMOS III-70

Number	Title
11-102	AMOS 3-70

VOLUME I -

Part I - AMOS 3-70 System
Part II - AMOS 3-70 Processor

VOLUME II -

Part I - AMOS 3-70 Wind Direction Sensor
Part II - AMOS 3-70 Wind Speed Sensor

VOLUME III - AMOS 3-70 Pressure Sensor

VOLUME IV - AMOS 3-70 Manual Entry Device and Final Remarks Device

MANUAL INDEX - AMOS III-73

Number	Title
11-103	AMOS III-73

Volume 1

Section 1. General Information
Section 2. Operation
Section 3. Theory of Operation
Section 4. Scheduled Maintenance
Section 5. Installation

Volume 2

Family Tree Diagram
Overall Block Diagram
Troubleshooting Maintenance Flow Chart
Major Function Block Diagrams
System Interconnect Diagram
Schematic Diagrams
Maintenance Dependency Charts
Wiring Diagram
Parts Data and Parts Location

Inserts (11-103)

Change 12 to AMOS Manual (Mod. #7)

AMOS III-73 Manual (11-103) Inserts

These inserts are Change 12 to the AMOS manual. Most previous changes were pen and ink revisions. Some changes were new pages included with maintenance or modification notes.

Change 12 documents AMOS Modifications No. 7. Since this modification did not apply to all AMOS's, the following action is recommended:

For all regions except Alaska, place the new pages in their proper places in each volume, and place superceded pages at the back of the volume for reference.

For Alaska Region only, place the new pages at the back of each volume.

The following pages are included in Change 12:

Volume 1

A	List of Effective pages
B	Record of Changes
iii/iv	Functional Index
1-11	Changes in General Information
3-3	Theory of Operation
4-5	Changes in Scheduled Maintenance
5-14a	Interconnecting Cable Diagram
5-24a	Installation Wiring Diagram
A-47/A-48	Quad Line Driver/Quad Line Receiver
A-49/A-50	Z8 Microcomputer/2K x 8 UV EPROM
A51	5V to ±12V DC/DC Converter

Volume 2

2-3/2-4	List of Effective Pages
2-11/2-12	Functional Index
2-19/2-20	Family Tree
2-22a	Interconnecting Cable Diagram
2-28a/2-28b	Overall Functional Description
2-58a/2-58b	Message Function Keyed Text
2-58c/2-58d	Message Function Keyed Text (cont.)
2-58e	Message Function Diagram
2-60a	System Interconnect
2-76a	1A2 Wiring Diagram
2-248a/2-248b	RS232COM Keyed Text
2-248c	RS232COM Schematic
2-248e/2-248f	Parts List/EPROM Listing
2-248g/2-248h	EPROM Listing (cont.)
2-248i/2-248j	EPROM Listing (cont.)
2-248k/2-248l	EPROM Listing (cont.)

MANUAL INDEX - RAMOS

Number	Title
11-104	RAMOS VOLUME I, Support Volume

Section 1. General Information
Section 2. Operation
Section 3. Theory of Operation
Section 4. Installation

RAMOS VOLUME II, Troubleshooting/Repair.

Family Tree Diagram
Overall Block Diagrams
Troubleshooting Maintenance Flow Charts
Major Function Block Diagrams
Schematic Diagrams
Wiring Diagram
Maintenance Dependency Charts
Parts Data and Parts Location

RAMOS VOLUME III, Troubleshooting/Repair

Schematic Diagrams
Parts Data and Parts Location
Maintenance Dependency Charts
Manufacturer's Manuals

MANUAL INDEX - MANUAL ENTRY DEVICE

Number	Title
11-105	MED Manual Entry Device Type A, Volume I - Support Volume Type A, Volume II - Troubleshooting/Repair Volume
11-105*	MED Manual Entry Device Type B - Depot Repair Volume
June 6, 1980	Errata Sheet #1 to MED Manual
Nov. 18, 1980	Change to Table of Contents, MED Manual Type A, Volume I.

*Not available to field

LIST OF EFFECTIVE PAGES

The List of Effective Pages in Volume 1 is a complete list of all manual pages. When pages are changed, added, or deleted, the list will be updated. Dispose of superseded pages in accordance with applicable regulations.

NOTE

A zero in the Change No. column indicates an original page.

The total number of pages in this volume is 120, consisting of the following:

Volume 1

Page No.	Change No.	Page No.	Change No.
Title	0	4-1 -- 4-4	0
A, B	12*	4-4a -- 4-4d	3
i, ii	0	4-5	12*
iii	12*	5-0 -- 5-12	0
iv -- x	0	5-13/(5-14 blank) . . .	7
1-0 -- 1-10	0	5-14a	12*
1-11	12*	5-15 -- 5-22	0
2-0 -- 1-3	0	5-23/(5-24 blank) . . .	7
3-1, 3-2	0	5-24a	12*
3-3	12*	A1 -- A45/(A46 blank) .	0
		A47 -- A51	12*

* Change 12 applies to all except Alaska Region (Modification Note No. 7)

RECORD OF CHANGES

CHANGE NO.	DATE	TITLE OR BRIEF DESCRIPTION	ENTERED BY
1	3/2/77	Maintenance Note No. 6, pages 2-35, 2-126, 2-127	
2	3/29/77	Modification Note No. 1, pages 2-127, 2-129, 2-134	
3	5/17/77	Maintenance Notes Nos. 7 & 8, 2 pages inserted after page 4-4, changes to pages 2-45, 2-59, 2-257, 2-263	
4	8/24/77	Maintenance Note No. 10, pages 2-37, 2-257, 2-263	
5	1/25/78	Modification Note No. 2, pages 2-171, 2-176	
6	3/14/78	Maintenance Note No. 11, pages 2-233, 2-237	
7	11/19/79	Modification Note No. 3, pages 2-255, 5-13, 5-23	
8	6/11/80	Modification Note No. 4, pages 2-233, 2-235, 2-237	
9	4/20/81	Maintenance Note No. 16, pages 2-205, 2-207, 2-225	
10	9/24/84	Modification Note No. 6, pages 2-77 through 2-86 (for replacement clock card only)	
11	4/19/85	Modification Note No. 8, 4 pages inserted after page 2-194 (Alaska Region only)	
12	9/20/85	Modification Note No. 7, 34 pages affected (all except Alaska Region)	

FUNCTIONAL INDEX

VOL 2 PAGE NO.'S 2-

DESCRIPTION	FRONT MATTER	MAJOR FUNCTION DIAGRAM	SCHEM DIAGRAM	KEYED TEXT	MDC OR MAINT DATA	PARTS DATA
LIST OF EFFECTIVE PAGES	3					
FOREWORD	5					
EXPLANATION OF CODES, SHADES, SYMBOLS	13					
HOW TO USE MDC'S	15					
FAMILY TREE	19					
INTERCONNECTING CABLE DIAGRAM	21					
OVERALL FUNCTION INFORMATION		27		23	29	
ALIGNMENT PROCEDURES	33					
POWER DISTRIBUTION		37		36		
PROCESSOR FUNCTION		45		39		
INDEX OF VISIBILITY FUNCTION		51		47		
MESSAGE FUNCTION		57		53		
SYSTEM INTERCONNECT			59			
UNIT 1 CONTROL CONSOLE			61			
1A1 PRESSURE SENSOR			63	63	29	65
1A2 PROCESSOR			67	66		69
1A2 WIRING DIAGRAM			75			
1A2A1 CLOCK		57	79	77	81	85
1A2A6 INDEX OF VISIBILITY 1		51	89	87	91	101
1A2A7 INDEX OF VISIBILITY 2		51	109	104	111	123
1A2A8 TEMPERATURE		45	129	126	131	133
1A2A9 DEWPOINT		45	129	126	131	133
1A2A10 WIND DIRECTION		45	137	135	143	147
1A2A11 WIND SPEED		45	155	150	157	165
1A2A12 ALTIMETER SETTING		45	171	168	173	175
1A2A13 PEAK WIND SPEED		45	181	178	183	189
1A2A14 PRECIPITATION ACCUMULATION		45	195	192	197	203
1A2A15 TELETYPE		57	209	206	215	223
1A2A16 SERVICE			227	226	229	231
1A2A15C RS232COM COMMUNICATIONS		58e	248e	248e		248e

FUNCTIONAL INDEX (Continued)

VOL. 2 PAGE NO.'S 2-

DESCRIPTION	FRONT MATTER	MAJOR FUNCTION DIAGRAM	SCHEM DIAGRAM	KEYED TEXT	MDC OR MAINT DATA	PARTS DATA
1A2A17 BATTERY CHARGER REGULATOR			233	232	235	237
1A2A18 BATTERY PACK			233	232		
1A2A19 TELETYPE RELAYS			239	239	239	241
1A2PS1 +4.75 VOLT POWER SUPPLY			245	242	244	247
2A1 WIND DIRECTION SENSOR			251	249	29	251
2A2 WIND SPEED SENSOR			253	253	29	253
2A3 TEMPERATURE SENSOR			255	255	29	255
2A4 DEWPOINT SENSOR			257	257	29	257
2A5 TIPPING BUCKET RAIN GAGE			259	259	29	259
2PS1 WIND SENSOR POWER SUPPLY			261	261	29	262
2PS2 TEMPERATURE/DEWPOINT SENSOR POWER SUPPLY			263	263	29	263
UNIT 3 LOCAL READOUT BOX			265	265	265	267

EXPLANATION OF SIGNAL FLOW LINES

Signal flow lines. Functional entities are connected together by means of lines which show the signal or energy flow through the system-equipment. The following are a few general techniques which can be applied to make the signal flow through a system-equipment more obvious.

Functional signal flow will be from left to right whenever possible. Feedback signal flow will generally be from right to left. Signal lines are connected to illustrate subordination and coordination of signal importance.

Signal lines that contain closely related information may be grouped into one signal line. However, care must be exercised in not grouping signal lines indiscriminately. Signal lines are grouped as follows:

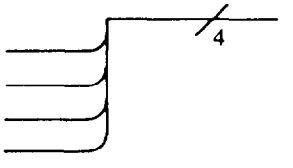

The number of signals being grouped is indicated by means of a slash through the grouped line and a number as shown above. Distribution of the grouped signals is shown by means of a curved breakoff line or a straight line breakoff.

EXAMPLE:

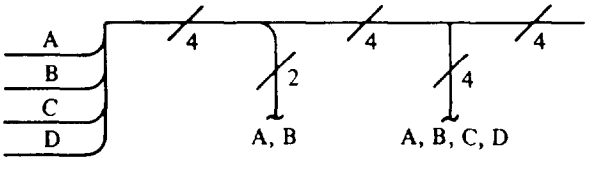

Changes in GENERAL INFORMATION
for AMOS Modification No. 7

The following changes apply to pages 1-0 through 1-11:

Unit 3A, a Hayes Smartmodem 300, replaces the Teletype and Unit 3, the Local Readout Box.

The AMOS, with Modification No. 7, transmits its data over the dial-network telephone line.

Changed System Parameters (on page 1-4) are:

Format:	Serial ASCII
Transmission Speed:	10 characters per second

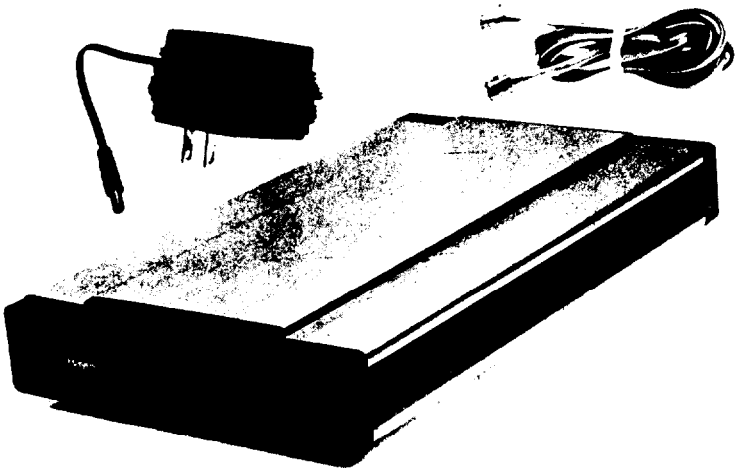

Unit 3A Hayes Smartmodem 300
Overall Dimensions: 1.5″ x 5.5″ x 9.6″

AMOS (message identifier)

Temperature - 101 degrees Fahrenheit
Dewpoint - 98 degrees Fahrenheit
Wind Direction - 320 degrees
Wind Speed - 21 knots
Altimeter Setting - 30.02 inches of mercury
Peak Wind Speed - 105 knots
Precipitation Accumulation - 3.20 inches

If sensor inputs are missing (disconnected), the following are examples of printouts which will occur:

Temperature: -99/(If sensor input shorted printout will be 43)
Dewpoint: -96/(If sensor input shorted printout will be 141)
Wind Direction: M
Wind Speed: M
Altimeter Setting: 781
Index of Visibility: M
Peak Wind Speed: 00
Precipitation Accumulation: M

In the event normal power to the AMOS III-73 is disrupted, a battery-powered power supply will serve to prevent loss of the six-hour precipitation accumulation data contained in that function's storage registers.

Peak wind speed printout will be the highest wind speed measured during the previous hour (the peak wind speed counter is reset to zero once each hour). Precipitation accumulation will be a cumulative reading over a six hour period, after which time the precipitation accumulation counter is reset to zero.

The AMOS III-73 system may be operated in one of three modes: Automatic, Local, and Test. When in the Automatic mode on tine, the system will, upon being interrogated, generate its AMOS message to the FAA Service "A" teletype link. In the Local mode off line, the FAA Service "A" link is disconnected from the local AMOS III system, and the station data can be locally printed out by pressing the Unit 3 Local Readout Switch. In the Test mode off line, (which also necessitates being in the Local mode to prevent data from being transmitted over the FAA Service "A" link) testing of the system is facilitated. Single messages, continuous messages, or single character observation may be generated while in this latter mode.

THEORY OF OPERATION (with AMOS Mod. No. 7)

Modification No. 7 enables AMOS data to be collected over dial-network telephone by the Centralized Automatic Data Acquisition System (CADAS) instead of the Service "A" Teletypewriter system. American Standard Code for Information Interchange (ASCII) is used instead of the five-level Baudot code.

Changes in SCHEDULED MAINTENANCE
for AMOS Modification No. 7

p. 4-1 Daily Maintenance (To be performed by observer)

1. Copy Check
   Check disseminated message for garbling or incorrect data or format.

p. 4-3 3. Precipitation Accumulation Checkout, and
4. Processor Test Mode Checkout

   a. To obtain a local readout, using a TI 745 Terminal (or equivalent) and a telephone separate from the AMOS telephone, dial the AMOS telephone number. When the communications link has been established, type the letter "O" on the terminal to obtain a readout. Type an ESCAPE to force the AMOS modem to hang up. (The AMOS will automatically hang up after one minute of no data transmission.) Alternatively, a local readout may be obtained by connecting a RS232C terminal in place of the modem, but this won't test the modem.

   b. Note: Switch S4 on RS232COM PCB functions as shorting jumper on Teletype PCB.

   c. Note: Switch S3 on RS232COM PCB functions as switch S1 on Teletype PCB.

   d. Note: Switch S2 on RS232COM PCB functions as switch S2 Teletype PCB.

Modification No. 7 Cabling Changes

Modification No. 7 deletes the following items:

Teletype
Unit 3 - Local Readout Box
Long Line Junction Box
Cables 15, 16, 17, 18, and 19

In their places are:

Unit 3A - Hayes Smartmodem 300
Modem Cab1e S090-1W1

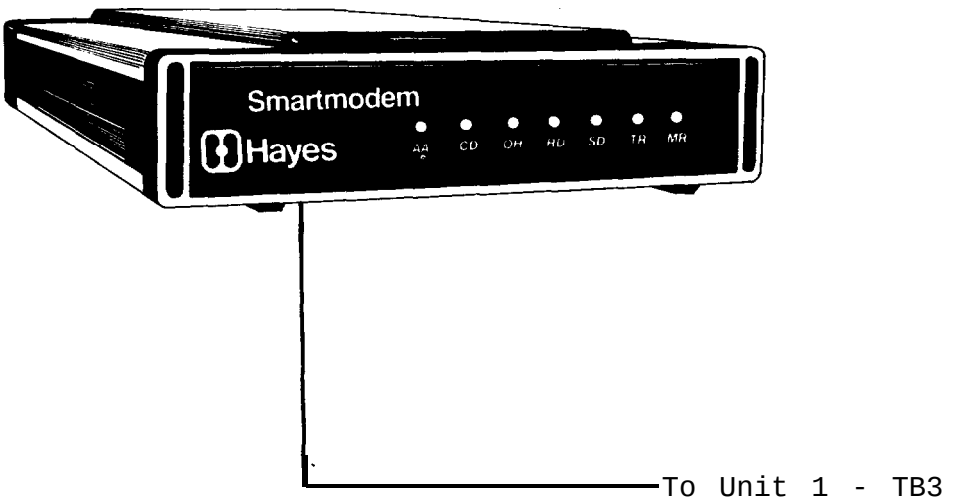

CHANGES FOR AMOS MODIFICATION NO. 7

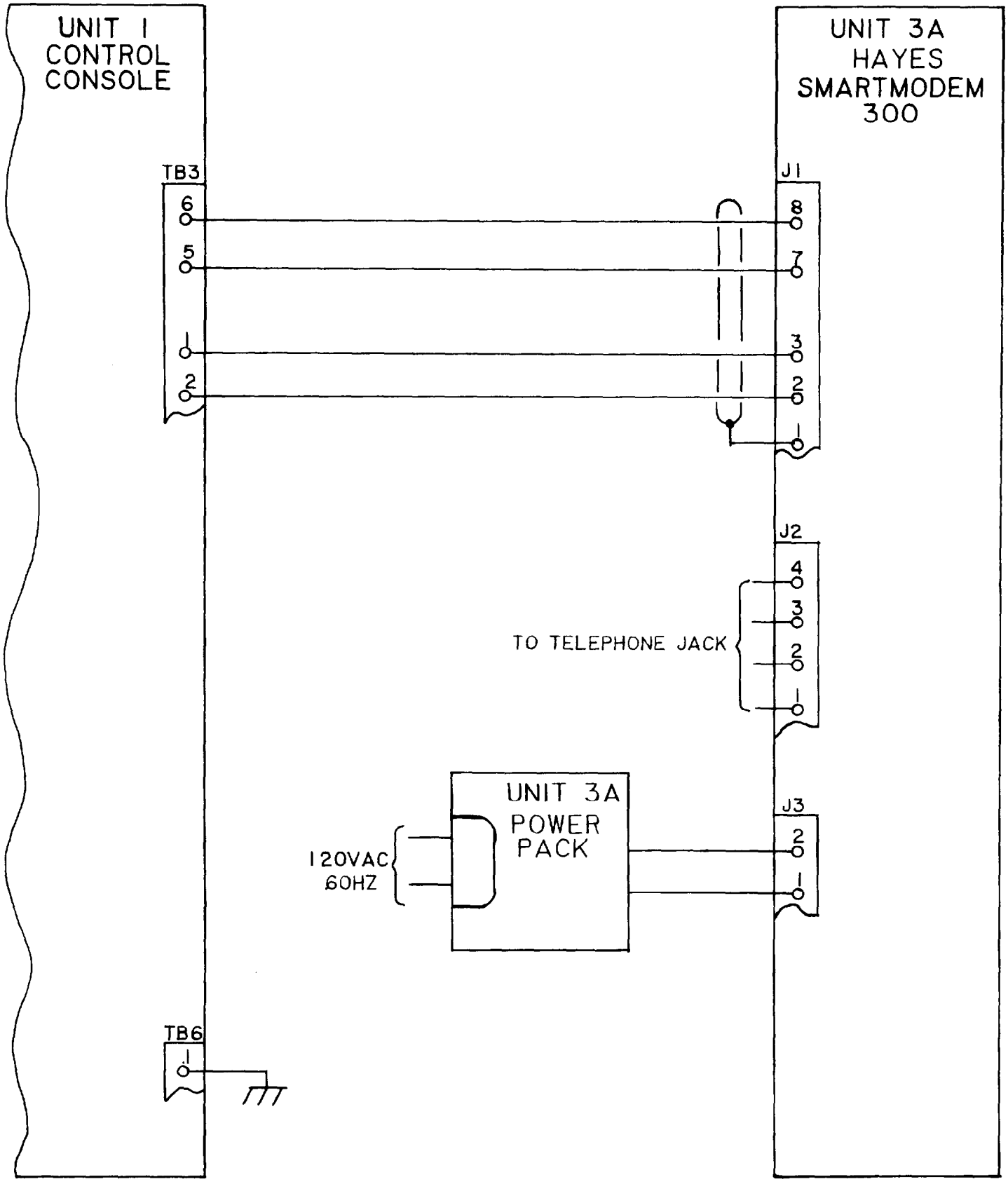

MOD. NO. 7 INSERT

FIGURE 5-12a INSTALLATION WIRING DIAGRAM 5-24a

DESCRIPTION	
QUAD LINE DRIVER	
PART NUMBER DS1488	MANUFACTURER NATIONAL SEMICONDUCTOR

The DS1488 is a quad line driver which converts standard DTL/TTL input logic levels through one stage of inversion to output levels which meet EIA Standard No. RS-232C and CCITT Recommendation V.24.

TOP VIEW

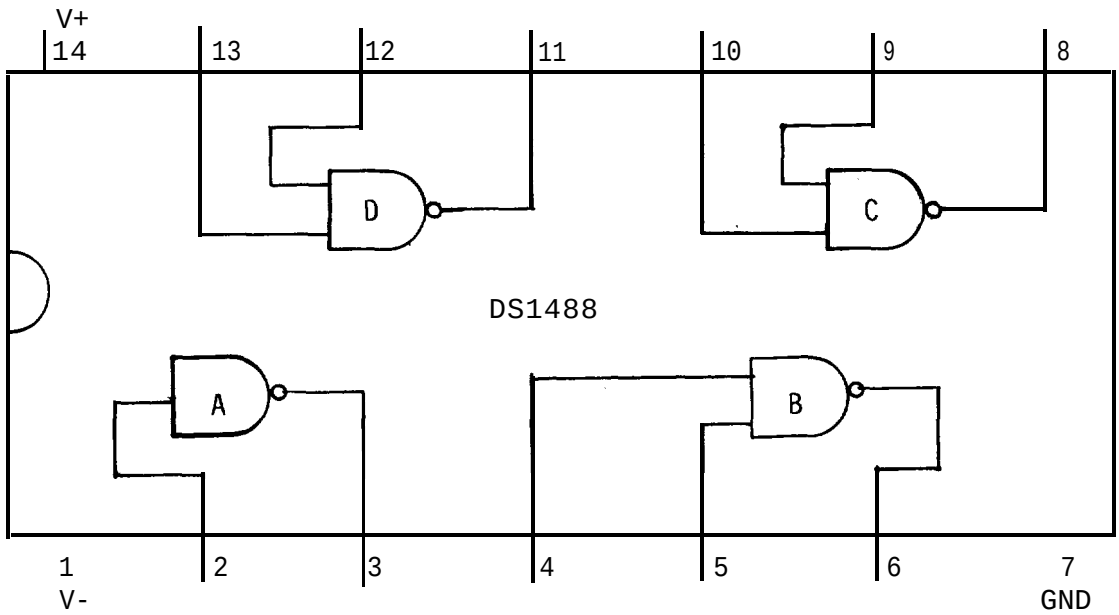

DESCRIPTION

QUAD LINE RECEIVER

PART NUMBER	MANUFACTURER
DS1489	NATIONAL SEMICONDUCTOR

This DS1489 is a quad line receiver designed to interface data terminal equipment with data communications equipment. This device satisfies the specifications of EIA Standard No. RS232C. Each receiver is equipped with a response control input.

TOP VIEW

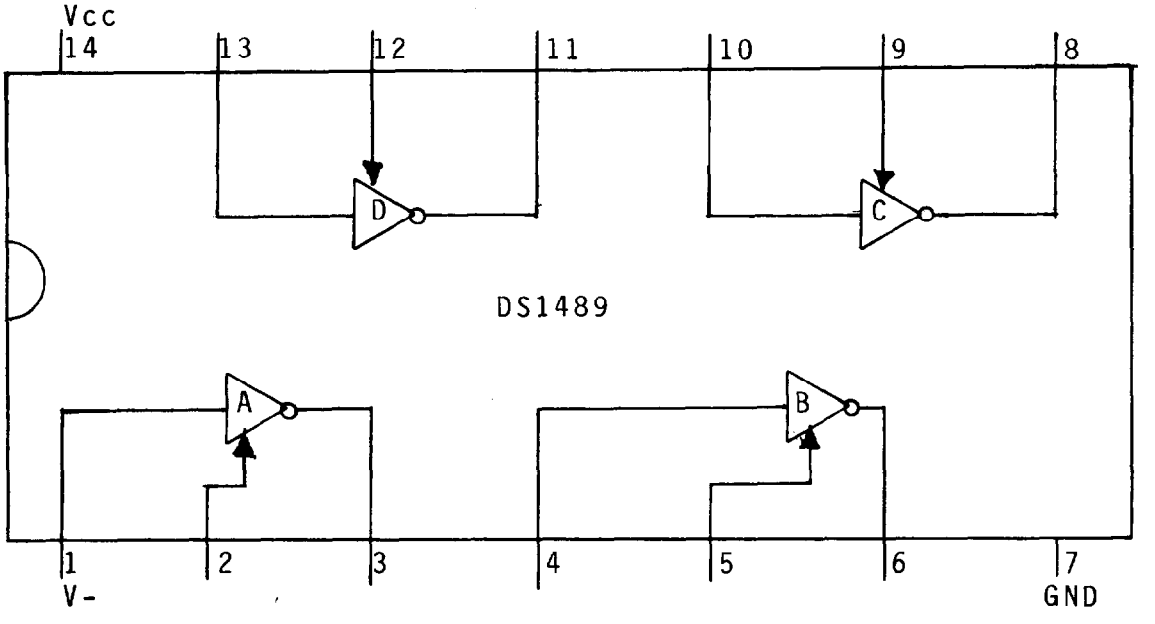

DESCRIPTION

Z8 MICROCOMPUTER -- DEVELOPMENT DEVICE WITH MEMORY INTERFACE

PART NUMBER	MANUFACTURER
Z8612CS	ZILOG

The Z8612CS is a microcomputer with these features:

- Buffered address and data lines for 4K bytes of ROM.
- 128 bytes of RAM.
- 32 Input/Output lines.
- 60K bytes addressable external space each for program and data memory.
- Vectored, priority interrupts for I/O, counter timers, and UART.
- On-chip oscillator.
- Single +5V power supply -- all pins TTL compatible.

TOP VIEW

VCC	1		64	PORT 3-6
XTAL2	2		63	PORT 3-1
XTAL1	3		62	PORT 2-7
PORT 3-7	4		61	PORT 2-6
PORT 3-0	5		60	PORT 2-5
RESET	6		59	PORT 2-4
READ/WRITE	7		58	PORT 2-3
DATA STROBE	8		57	PORT 2-2
ADDRESS STROBE	9		56	PORT 2-1
PORT 3-5	10		55	PORT 2-0
PORT 3-2	11		54	PORT 3-3
PORT 0-0	12		53	PORT 3-4
PORT 0-1	13		52	PORT 1-7
PORT 0-2	14		51	PORT 1-6
PORT 0-3	15		50	PORT 1-5
PORT 0-4	16	Z8612CS	49	PORT 1-4
GROUND	17		48	PORT 1-3
PORT 0-5	18		47	PORT 1-2
PORT 0-6	19		46	PORT 1-1
PORT 0-7	20		45	PORT 1-0
INTERRUPT ACKNOWLEDGE	21		44	DATA 7
INSTRUCTION SYNC	22		43	DATA 6
SYSTEM CLOCK	23		42	DATA 5
PROGRAM MEMORY DATA STROBE	24		41	DATA 4
DATA 0	25		40	ADDRESS 0
DATA 1	26		39	ADDRESS 1
DATA 2	27		38	ADDRESS 2
DATA 3	28		37	ADDRESS 3
ADDRESS 11	29		36	ADDRESS 4
ADDRESS 10	30		35	ADDRESS 5
ADDRESS 9	31		34	ADDRESS 6
ADDRESS 8	32		33	ADDRESS 7

DESCRIPTION	
2K x 8 UV ERASABLE PROGRAMMABLE READ ONLY MEMORY (EPROM)	
PART NUMBER MM2716Q	MANUFACTURER NATIONAL SEMICONDUCTOR

The MM2716Q is a high speed 16K ultraviolet erasable and electronically reprogrammable EPROM. It is organized as 2048 bytes of 8 bits. It is a static device using only a single +5V power supply.

TOP VIEW

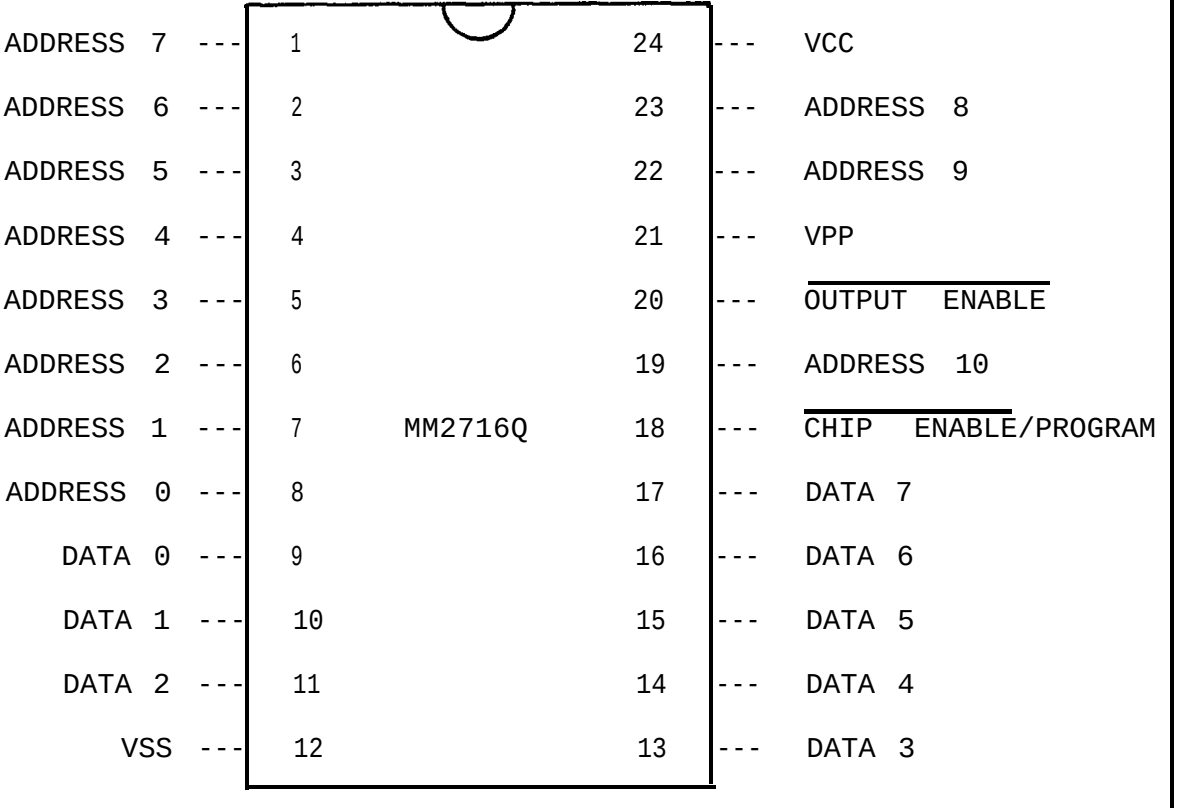

DESCRIPTION	
5V TO ±12V DC/DC CONVERTER	
PART NUMBER PM671	MANUFACTURER COMPUTER PRODUCTS, INC.

The PM671 is a high-performance dual output DC/DC converter packaged in an IC compatible 24-pin DIP configuration.

Input - 5 ± 0.5 VDC at 380 mA
Output - ±12 VDC ± 5% at 40 mA
Continuous short circuit protection
Automatic short circuit restart
50% Efficiency
Dimensions - 1.25 x 0.8 x 0.4 inches

TOP VIEW

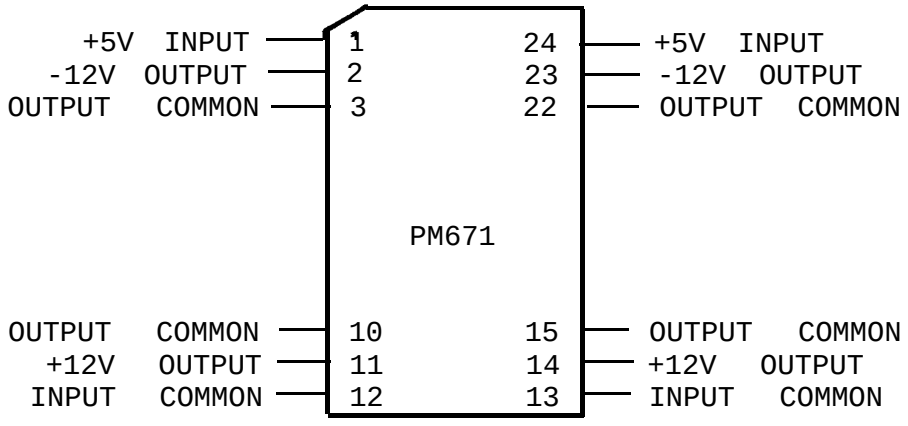

LIST OF EFFECTIVE PAGES

The List of Effective Pages in Volume 2 is a complete list of all pages in that volume. When pages are changed, added, or deleted, the list will be updated. Dispose of superseded pages in accordance with applicable regulations.

NOTE

A zero in the Change No. column indicates an original page.

The total number of pages in this volume is 293, consisting of the following:

Page No.	Change No.	Page No.	Change No.
2-1/(2-2 blank)	0	2-129/(2-130 blank)	2
2-3/(2-4 blank)	12*	2-131 -- 2-133	0
2-5 -- 2-10	0	2-134	2
2-11	12*	2-135 -- (2-170 blank)	0
2-12 -- 2-18	0	2-171/(2-172 blank)	5
2-19/(2-20 blank)	12*	2-173 -- 2-175	0
2-21, 2-22	0	2-176	5
2-22a	12*	2-177 -- (2-194 blank)	0
2-23 -- (2-28 blank)	0	2-194a -- 2-194d	11*
2-28a/2-28b	12*	2-195 -- 2-204	0
2-29 -- 2-34	0	2-205	9
2-35	1	2-206	0
2-36	0	2-207	9
2-37/(2-38 blank)	4	2-208 -- 2-224	0
2-39 -- 2-44	0	2-225	9
2-45/(2-46 blank)	3	2-226 -- 2-232	0
2-47 -- (2-58 blank;	0	2-233/(2-234 blank)	8
2-58a -- 2-58e	12*	2-235/(2-236 blank)	8
2-59/(2-60 blank)	3	2-237	8
2-60a	12*	2-238 -- 2-248	0
2-61 -- (2-76 blank)	0	2-248a -- 2-2481	12*
2-76a	12*	2-249 -- (2-254 blank)	0
2-77 -- 2-86	10*	2-255/(2-256 blank)	7
2-87 -- 2-125	0	2-257/(2-258 blank)	4
2-126	1	2-259 -- 2-262	0
2-127	2	2-263/(2-264 blank)	4
2-128	0	2-265 -- 2-267	0

* Change 10 applies to Replacement Clock Card only (Modification Note No. 6)
Change 11 applies to Alaska Region only (Modification Note No. 8)
Change 12 applies to all except Alaska Region (Modification Note No. 7)

FUNCTIONAL INDEX

VOL 2 PAGE NO.'S 2.

DESCRIPTION	FRONT MATTER	MAJOR FUNCTION DIAGRAM	SCHEM DIAGRAM	KEYED TEXT	MDC OR MAINT DATA	PARTS DATA
LIST OF EFFECTIVE PAGES	3					
FOREWORD	5					
EXPLANATION OF CODES, SHADES, SYMBOLS	13					
HOW TO USE MDC'S	15					
FAMILY TREE	19					
INTERCONNECTING CABLE DIAGRAM	21					
OVERALL FUNCTION INFORMATION		27		23	29	
ALIGNMENT PROCEDURES	33					
POWER DISTRIBUTION		37		36		
PROCESSOR FUNCTION		45		39		
INDEX OF VISIBILITY FUNCTION		51		47		
MESSAGE FUNCTION		57		53		
SYSTEM INTERCONNECT			59			
UNIT 1 CONTROL CONSOLE			61			
1A1 PRESSURE SENSOR			63	63	29	65
1A2 PROCESSOR			67	66		69
1A2 WIRING DIAGRAM			75			
1A2A1 CLOCK		57	79	77	81	85
1A2A6 INDEX OF VISIBILITY 1		51	89	87	91	101
1A2A7 INDEX OF VISIBILITY 2		51	109	104	111	123
1A2A8 TEMPERATURE		45	129	126	131	133
1A2A9 DEWPOINT		45	129	126	131	133
1A2A10 WIND DIRECTION		45	137	135	143	147
1A2A11 WIND SPEED		45	155	150	157	165
1A2A12 ALTIMETER SETTING		45	171	168	173	175
1A2A13 PEAK WIND SPEED		45	181	178	183	189
1A2A14 PRECIPITATION ACCUMULATION		45	195	192	197	203
1A2A15 TELETYPE		57	209	206	215	223
1A2A16 SERVICE			227	226	229	231
1A2A15C RS232COM COMMUNICATIONS		58e	248c	248c		248e

FUNCTIONAL INDEX (Continued)	VOL 2 PAGE NO.'S 2-					
DESCRIPTION	FRONT MATTER	MAJOR FUNCTION DIAGRAM	SCHEM DIAGRAM	KEYED TEXT	MDC OR MAINT DATA	PARTS DATA
1A2A17 BATTERY CHARGER REGULATOR			233	232	235	237
1A2A18 BATTERY PACK			233	232		
1A2A19 TELETYPE RELAYS			239	239	239	241
1A2PS1 +4.75 VOLT POWER SUPPLY			245	242	244	247
2A1 WIND DIRECTION SENSOR			251	249	29	251
2A2 WIND SPEED SENSOR			253	253	29	253
2A3 TEMPERATURE SENSOR			255	255	29	255
2A4 DEWPOINT SENSOR			257	257	29	257
2A5 TIPPING BUCKET RAIN GAGE			259	259	29	259
2PS1 WIND SENSOR POWER SUPPLY			261	261	29	262
2PS2 TEMPERATURE/DEWPOINT SENSOR POWER SUPPLY			263	263	29	263
UNIT 3 LOCAL READOUT BOX			265	265	265	267

EXPLANATION OF SIGNAL FLOW LINES

Signal flow lines. Functional entities are connected together by means of tines which show the signal or energy flow through the system-equipment. The following are a few general techniques which can be applied to make the signal flow through a system-equipment more obvious.

Functional signal flow will be from left to right whenever possible. Feedback signal flow will generally be from right to left. Signal lines are connected to illustrate subordination and coordination of signal importance.

Signal lines that contain closely related information may be grouped into one signal line. However, care must be exercised in not grouping signal lines indiscriminately. Signal lines are grouped as follows:

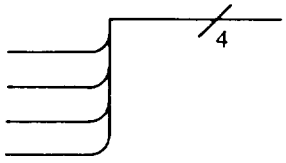

The number of signals being grouped is indicated by means of a slash through the grouped tine and a number as shown above. Distribution of the grouped signals is shown by means of a curved breakoff line or a straight line breakoff.

EXAMPLE:

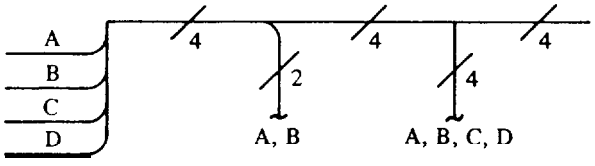

FAMILY TREE

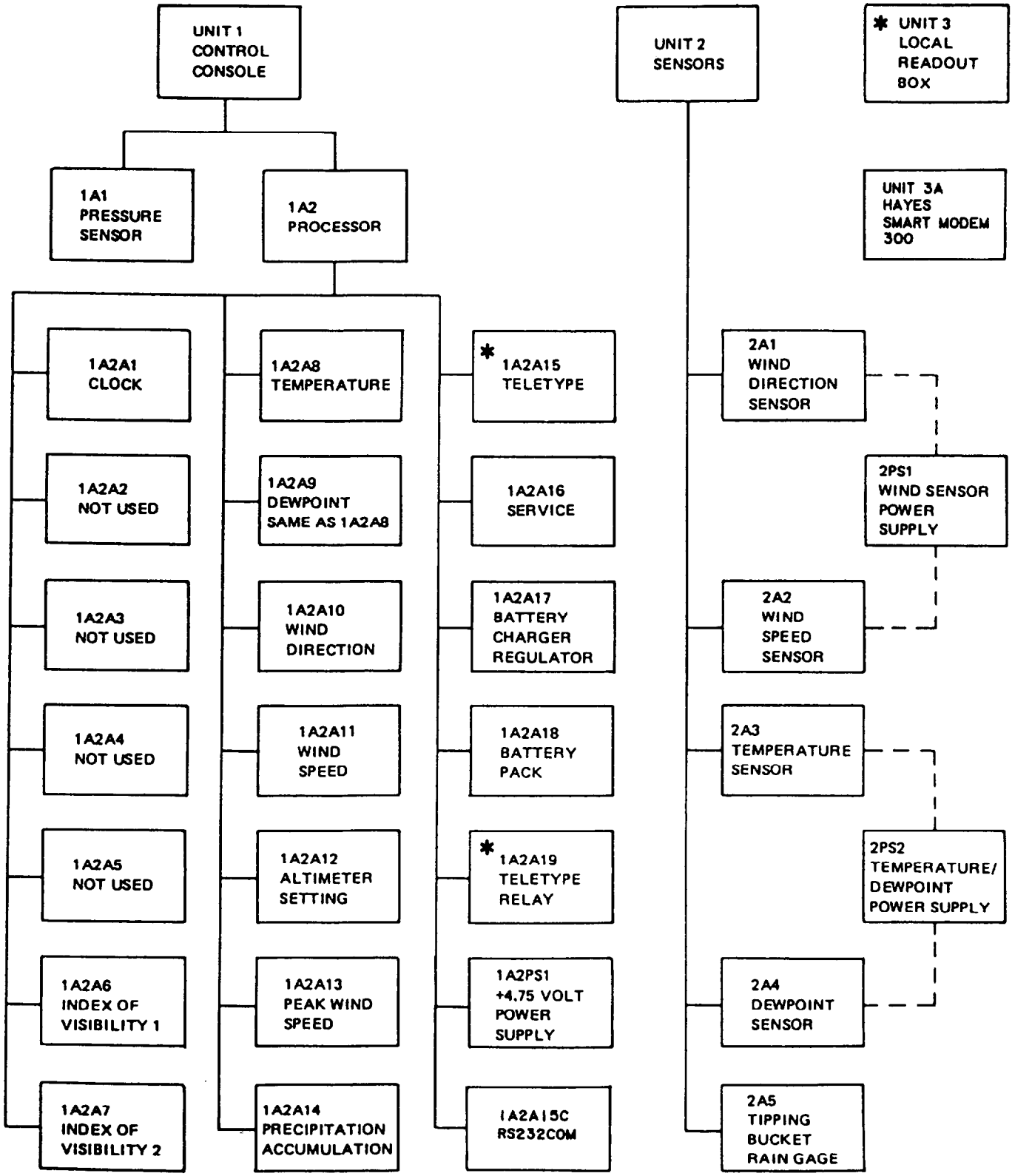

* OBSOLETE

Modification No. 7 Cabling Changes

Modification No. 7 deletes the following items:

Teletype
Unit 3 - Local Readout Box
Long Line Junction Box
Cables 15, 16, 17, 18, and 19

In their places are:

Unit 3A - Hayes Smartmodem 300
Modem Cable S090-1W1

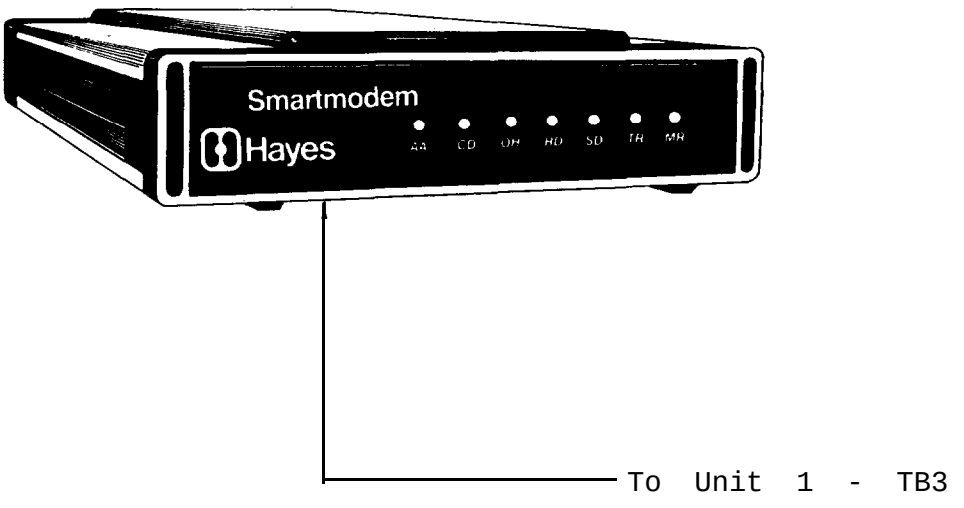

OVERALL FUNCTIONAL DESCRIPTION (for AMOS with Mod. No. 7)

Mod. No. 7 changes the AMOS output from 75 baud teletype Baudot to 110 baud RS232C ASCII.

HEX-ASCII CONVERSION CHART

1st HEX DIGIT	2nd HEX DIGIT															
	0	1	2	3	4	5	6	7	8	9	A	B	C	D	E	F
0	NUL	SOH	STX	ETX	EOT	ENQ	ACK	BEL	BS	HT	LF	VT	FF	CR	SO	SI
1	DLE	DC1	DC2	DC3	DC4	NAK	SYN	ETB	CAN	EM	SUB	ESC	FS	GS	RS	US
2	SP	!	"	#	$	%	&	'	(	)	*	+	,	-	.	/
3	0	1	2	3	4	5	6	7	8	9	:	;	<	=	>	?
4	@	A	B	C	D	E	F	G	H	I	J	K	L	M	N	O
5	P	Q	R	S	T	U	V	W	X	Y	Z	[	\	]	^	_
6	`	a	b	c	d	e	f	g	h	i	j	k	l	m	n	o
7	p	q	r	s	t	u	v	w	x	y	z	{	|	}	~	DEL

Some Baudot characters are not found in the ASCII character set. They are converted as follows:

Baudot:	blank	↑	↗	↙	⦶	←	○	←	↖	↓	⊕	↘	⦶
ASCII:	null	-	$	'	,	!	:	(	)	#	?	&	;

(Figure Shift and Letter Shift are not transmitted in ASCII.

PROCESSOR FUNCTION (for AMOS with Mod. No. 7)

Mod No. 7 replaces the 1A2A15 Teletype printed circuit board with the 1A2A15C RS232COM printed circuit board. The word "AMOS" at the beginning of the message is optional via switch S1 on the RS232COM printed circuit board.

MESSAGE FUNCTION (for AMOS with Mod. No. 7)

The AMOS message will be generated when any of the following conditions are met:

1. The letter "0" is received from the Modem or the MED, when RS232COM S4 = Normal.

2. RS232COM S2 is pushed, when S4 = Test.

3. DISPLAY CALL signal is received.

OVERALL FUNCTIONAL DIAGRAM (for AMOS with Mod. No. 7)

Mod. No. 7 effects the following changes to the OVERALL FUNCTIONAL DIAGRAM on page 2-27:

1. Unit 3, Local Readout Box, is eliminated.

2. The Teletype is replaced with the Modem.

3. Signals between the Message Function and the Modem are:

   Received Data (RX)
   Transmitted Data (TX)
   Carrier Detected (CD)

MESSAGE FUNCTION

Generates the timing and character control for the AMOS message and timing signals for processing of sensor information. Contains the circuitry necessary to interface the AMOS III to the Modem or the MED. Circuitry consists of two major subdivisions; Message Control and Timing Control. The Message Control provides means for station call-up and message formatting and output. The Timing Control generates timing signals used in the processing of the Wind Direction, Wind Speed, Index of Visibility, Peak Wind Speed, and Precipitation sensor information. The RS232C Message Control sequentially formats the message outputs of the Temperature, Dewpoint, Wind Direction, Wind Speed, Altimeter Setting and Precipitation Accumulation Processors. A typical AMOS message will appear in the following format:

AMOS	XXX/	XXX/	XX	XXX/	XXX/	PK WND XXX	XXX
1	2	3	4	5	6	7	8

(if used, IVXXX, Index of Visibility, will appear in here)

1. AMOS - generated by the Teletype Message Control at the beginning of all messages (except when the AMOS is used as an AUTOB or with a MED).

2. Temperature - maximum of 3 digits (range -99 to 199 degrees Fahrenheit) followed by slash mark (/).

3. Dewpoint - maximum of 3 digits (range -96 to 199 degrees Fahrenheit) followed by slash mark (/).

4. Wind Direction - maximum of 2 digits indicating tens of degrees (DO to 36, with 36 indicating North, 00 indicating calm).

5. Wind Speed - maximum of 3 digits (O-199 knots), followed by slash mark (/).

6. Altimeter Setting - maximum of 3 digits (000-999 in. of mercury, with most significant digit and decimal point omitted, e.g., 988 = 29.88 in Hg.)

7. Peak Wind - Space, followed by letters PK, followed by space, followed by letters WND, followed by space, followed by 3 digits maximum (O-199 knots).

8. Precipitation - maximum of 3 digits (0.00-9.99 inches).

If the Index of Visibility sensor is utilized, the visibility reading will appear immediately following the Altimeter Setting readout, and will appear as follows: IVXXX, followed by a space. This readout will be +7 when Index of Visibility greater than 7 miles, 2 through 7 when visibility between 2 and 7 miles, or 0.0 through 2.0 when visibility between 0.0 and 2.0 miles.

The timing for each portion of the AMOS message is furnished by the RS232C Message Control. First, the RESET signal, which is connected to all readout circuits, goes low. This enables all of the printed circuit boards in the Processor to give readouts when interrogated. After the RS232C Message Control has generated the AMOS printout, a high 1(A) pulse is applied to the first printed circuit board in the card file (1A2A8, Temperature), and enables its readout to begin.

The SHIFT signal clocks the readout of that particular portion of the message until the last character is read. Simultaneously with this last readout, the 1A2A8 printed circuit board passes the 1(B) signal to the next printed circuit board in the card file (1A2A9, Dewpoint). This "1" signal is thus passed sequentially from one printed circuit board to the next in line, until the entire AMOS message is complete. The 1(J) signal from the processor will then stop the RS232C Message Control from further processing. Each printed circuit board which has a readout is connected in parallel to all others by means of two busses; one for Baudot outputs, and the other for BCD outputs. Only one printed circuit board is interrogated at any one time by the enabling "1" signal; outputs from the other printed circuit boards are held low until their turn arrives in the sequence.

The BCD and Baudot busses from the Processor Function are tied directly to the RS232C Message Control. The Baudot outputs command the RS232C Message Control to print letters or characters, while the BCD outputs command numeral printout. Any time that Baudot information is being transferred, the BCD INHIBIT signal will instruct the RS232C Message Control to ignore data present on the BCD bus.

The 1PPM, 1PPS, 120PPS outputs from the Timing Control are used by the Processor Function to process the digital information being generated by the sensors. 120PPS is used only by the Wind Direction Processor. 1PPS is used only by the Peak Wind Speed Processor, while 1PPM is used only by the Wind Speed Processor.

The 1 HOUR signal from the Timing Control is used to zero the Peak Counter Control in the Peak Wind Speed Processor once each hour, and, in conjunction with the 6 Hour Counter in the Precipitation Processor, to zero the Precipitation Counter once each six hours.

1 C101

Pulse shaping for the Display Call Control in the RS232C Message Control.

2 RS232C MESSAGE CONTROL

Generates timing and character control for the AMOS message. Produces the SHIFT pulse, which controls the output characters of the processor function. Produces the RESET signal, which, when high, disables the message outputs of the processor function. Generates the "1" signal, which, when high, starts the message output from the Processor. Converts the parallel BCD and Baudot inputs from the Processor into serial ASCII output.

The Power On signal resets and initializes the RS232C Message Control.

When the RS232C Message Control receives a call from either the DISPLAY CALL or the Serial to Parallel Receiver (letter "0"), then RESET will go low. This low RESET signal enables a 10 second failsafe timer in the Message Composer and starts the transmission sequence. The Message Composer generates SHIFT pulses which are used in the Processor Function and to load the Parallel to Serial Transmitter.

The Message Composer will first send the word "AMOS" to the Baudot to ASCII Coder (if enabled by switch S1). The parallel ASCII output is converted by the Parallel to Serial Transmitter to an RS232C serial output which sends data to the Modem or the MED. The Message Composer next generates the interrogating "1" pulse. This "1" pulse starts the sequential interrogation of the Processor Function. The BCD and Baudot outputs of the Processor Function are fed to the RS232C Message Control where they are converted to serial ASCII and sent to the Modem or MED. When the 1(J) pulse arrives at the Message Composer from the Processor Function, RESET will go high, ending the transmission. [The failsafe timer will end the transmission if the 1(J) pulse does not arrive.]

When the Message Composer receives a hang-up from either the internal one minute time-out or the Serial to Parallel Receiver (ESCape character), then it will send the disconnect sequence to the Parallel to Serial Transmitter. This sequence will cause the Modem to disconnect (hang up the telephone).

3 TRANSMITTING SWITCH

Transistor switch which is turned on and off at the transmission rate as controlled by the TX output from the RS232C Message Control.

4 DS101

Transmitting lamp, which is illuminated each time the Transmitting Switch is turned on.

5 RELAY CONTROL

Transistor switch (not used).

6 MANUAL RELAY

Always in the de-energized position. Passes the "1(A)“ signal to the Processor Function when the "1" signal is generated by the RS232C Message Control.

7 TIMING CONTROL

Generates the 120PPS, 1PPS, 1PPM, and 1 HOUR signals for use in timing of processor function. See table below for signal relationships.

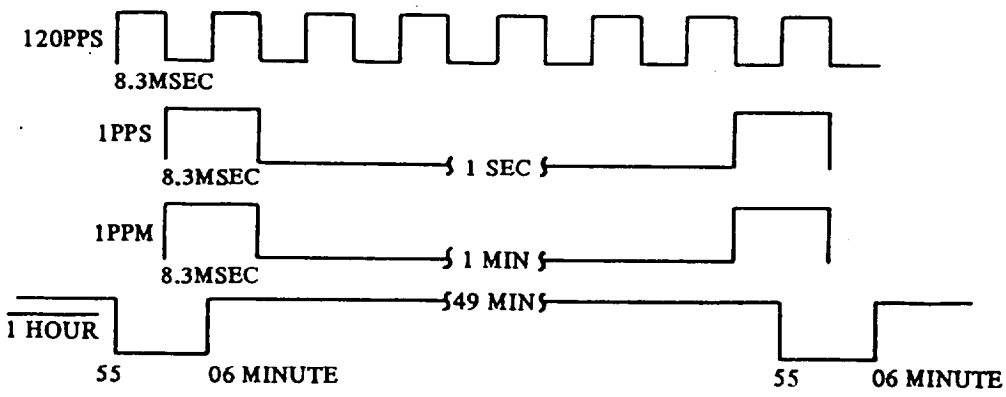

The Timing Control receives 12.6VAC 60Hz from the Power Distribution Function, and converts this input to 120PPS square waves. The 120PPS is divided by the Pulse Divider into three outputs: 1PPS', 1PPM', and 6PPM. The 1PPS' and 1PPM' are inputs to the Pulse Width Control, which in turn converts them into one 8.33 millisecond pulse per second, and one 8.33 millisecond pulse per minute. The Accutron clock controls the 1 Hour Window Timer, which provides a high 55TH MINUTE signal when the minute hand of the clock reaches the 55th minute of the hour. The 1 Hour Window Timer also generates a high 6TH MINUTE signal when the clock minute hand reaches that point. These two signals to the Window Enable will cause the 1 HOUR signal to go low for the 11-minute period (55th to 6th minute).

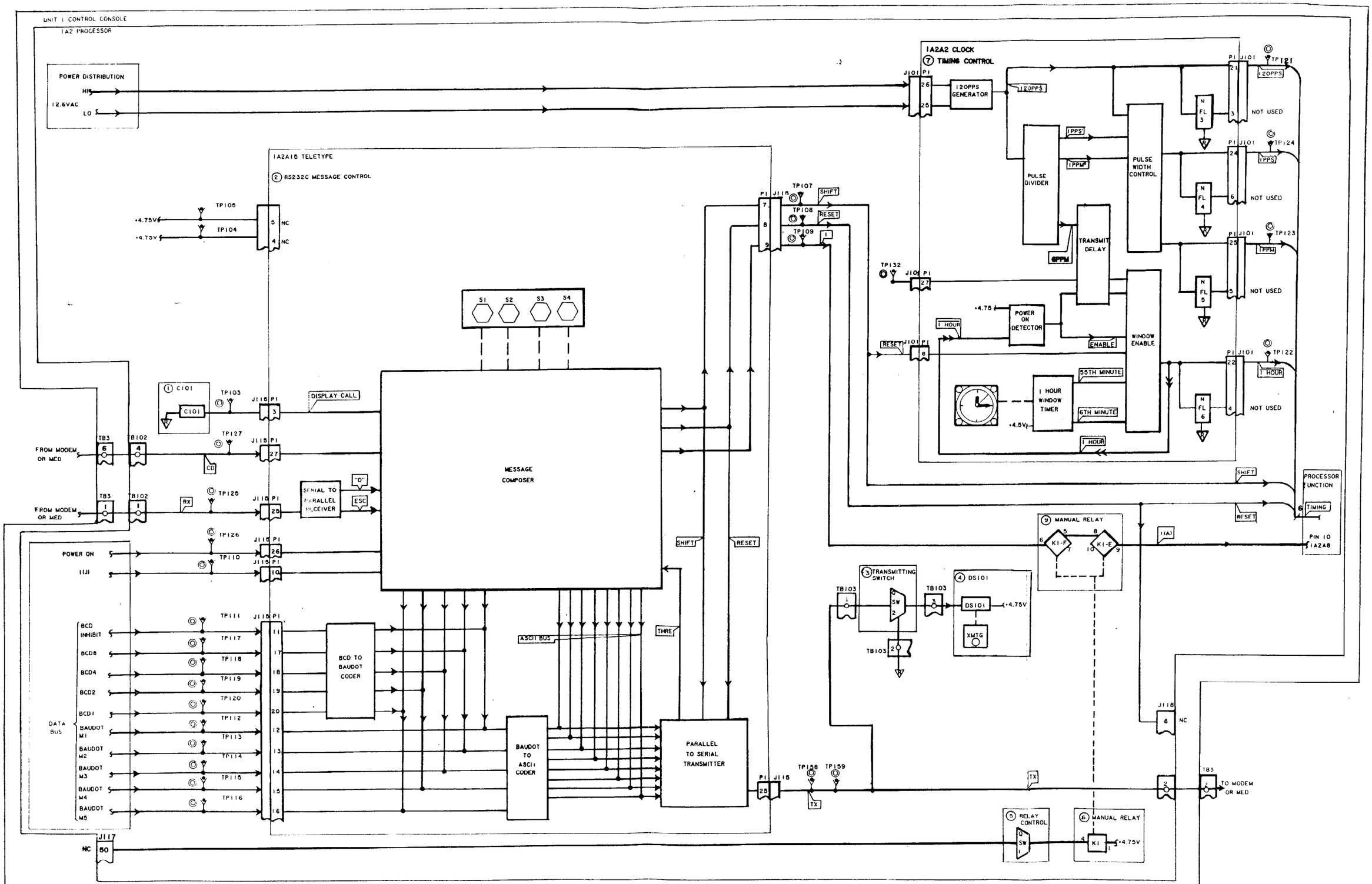
UNIT 1 CONTROL CONSOLE
1A2 PROCESSOR
POWER DISTRIBUTION
HI
12.6VAC
LO
1A2A2 CLOCK
7 TIMING CONTROL
120PPS GENERATOR
PULSE DIVIDER
PULSE WIDTH CONTROL
TRANSMIT DELAY
POWER ON DETECTOR
WINDOW ENABLE
1 HOUR WINDOW TIMER
55TH MINUTE
6TH MINUTE
NOT USED
1A2A15 TELETYPE
2 RS232C MESSAGE CONTROL
MESSAGE COMPOSER
S1
S2
S3
S4
1 C101
DISPLAY CALL
FROM MODEM OR MED
SERIAL TO PARALLEL RECEIVER
POWER ON
1(J)
DATA BUS
BCD INHIBIT
BCD8
BCD4
BCD2
BCD1
BAUDOT M1
BAUDOT M2
BAUDOT M3
BAUDOT M4
BAUDOT M5
BCD TO BAUDOT CODER
BAUDOT TO ASCII CODER
ASCII BUS
PARALLEL TO SERIAL TRANSMITTER
3 TRANSMITTING SWITCH
4 DS101
XMTG
9 MANUAL RELAY
K1-F
K1-E
PROCESSOR FUNCTION
TIMING
PIN 10 1A2A8
5 RELAY CONTROL
6 MANUAL RELAY
K1
TO MODEM OR MED

IN MODIFICATION NO. 7, THE LOCAL READOUT BOX IS REPLACED BY THE HAYES SMARTMODEM 300, AND THE SERVICE "A" LONG LINE IS REPLACED BY THE DIAL-NETWORK TELEPHONE LINE.

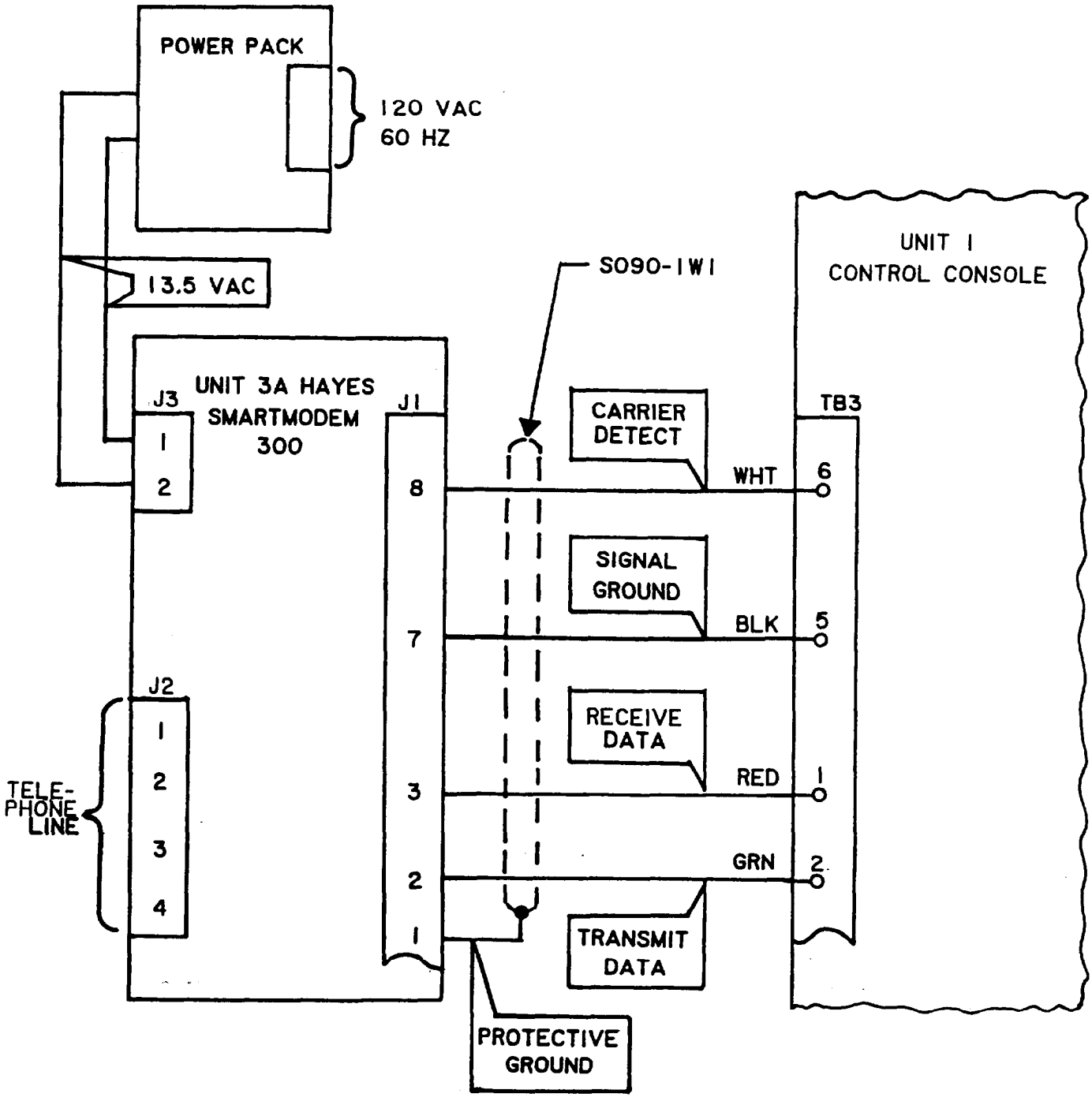

BEFORE MOD. NO. 7

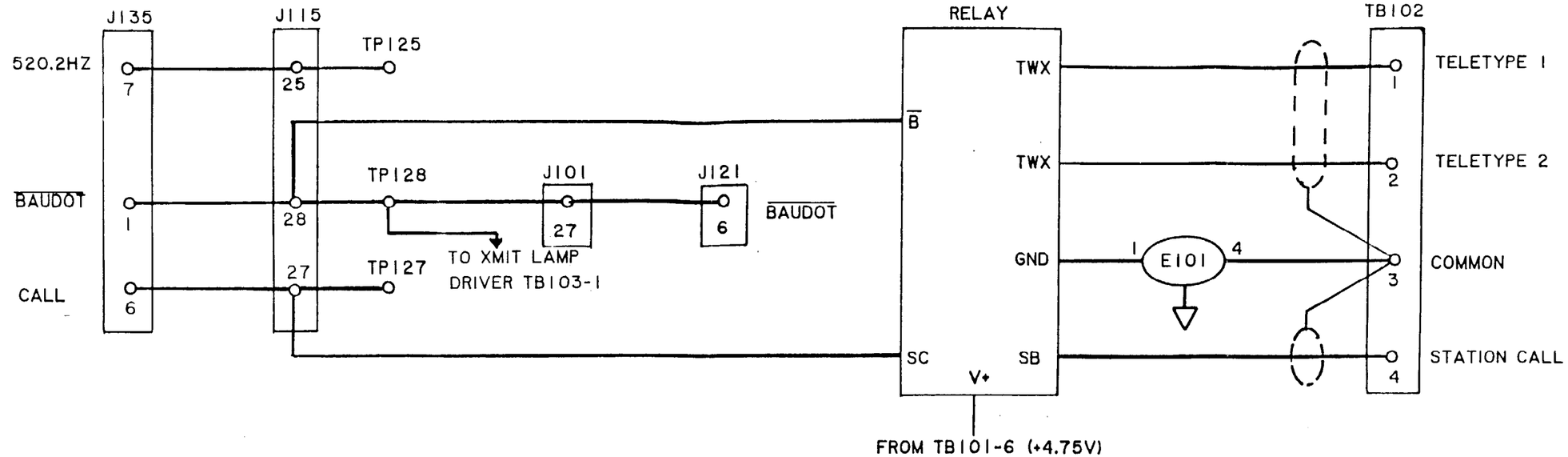

IN MODIFICATION NO. 7, THE 1A2A19 TELETYPE RELAY IS REMOVED, AND J115 (RS232COM JACK) IS CONNECTED DIRECTLY TO TB102 (MODEM OR MED CONNECTION).

AFTER MOD. NO. 7

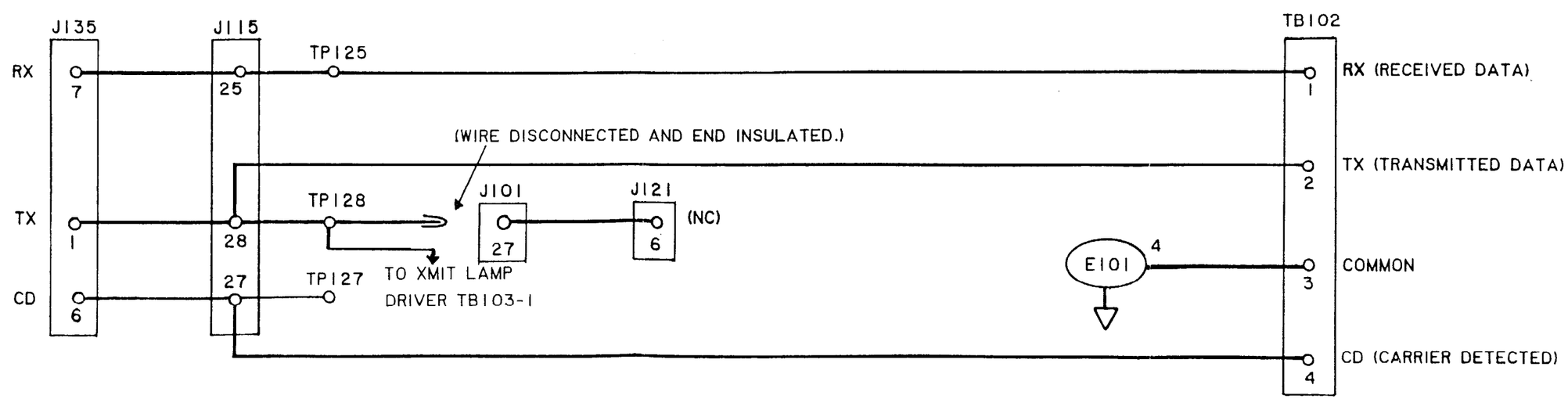

Generates the timing and character control for the AMOS message and supplies the letters A, M, O, S portion of the message. The RS232COM may be operated in either the Normal or Test mode, as selected by switch S4. In the Normal mode, when either a DISPLAY CALL or the letter O on RX is input to the processor, the AMOS message is output in ASCII code at 110 baud through output TX. The processor provides a SHIFT pulse to advance the AMOS through each successive character in the message. In the Test mode, the message is initiated when either a DISPLAY CALL is input or when switch S2 is activated. In either mode switch S1 determines whether the letters A, M, O, S are sent: they are not sent if the AMOS is either an AUTOB or connected to a MED.

NOTE: The 1A2A15C RS232COM functions similarly to the 1A2A15 Teletype and 1A2A15A AUTOB Teletype with the following exceptions:

The RS232COM responds to an ASCII letter O rather than a STATION CALL.

The RS232COM transmits in 110 baud ASCII rather than 75 baud Baudot code.

The RS232COM is switch selectable for either AMOS or AUTOB or MED operation.

(1) C-PWR-1

Distributes +4.75V to the 1A2A15C RS232COM printed circuit board. Converter U3 generates ±12V for the RS232C driver U4. Capacitors are distributed throughout the board to attenuate surges on the power lines.

(2) N-SW-1

These switches control the options of the 1A2A15C RS232COM. Switch S1 controls whether the letters A, M, O, S are included in the AMOS message. Switch S4 selects either the Normal mode or the Test mode. Switches S2 and S3 operate only when switch S4 is in the Test mode. Switch S3 selects whether a transmission will be a complete message (NORM), a single character (STEP), or repeating complete messages (CONT). Switch S2 initiates a transmission. Resistor pack U1 contains pull-up resistors for the switches.

(3) C-LIM-1

Limits the incoming RS232C level signals to the +4.75V level. Signals limited are CD (carrier detected), RX (received data), and DISPLAY CALL.

(4) C-PRO-1

The Z8 microcomputer U2 executes the program stored in EPROM U5 which controls the operation of the 1A2A15C RS232COM. The following features are included in the program:

Provides control signals: SHIFT, RESET, 1 OUT.
Translates Baudot and BCD codes into ASCII.
Transmits ASCII messages at 110 baud.
Limits message length to 10 seconds.
(Disabled when in Test mode.)
Provides modem disconnect (telephone hang-up) after either one minute of no activity or on receipt of Escape character.

For details refer to program listing. Capacitor C1 provides the power up reset for the RS232COM. Resistor pack U6 provides pull-down resistors for the BAUDOT BUS, BCD BUS, BCD INHIBIT, POWER ON, AND 1 IN signals.

(5) I-DVR-1

Provides RS232C drive for TX (transmitted data).

S007-1A2A15C
RS232COM

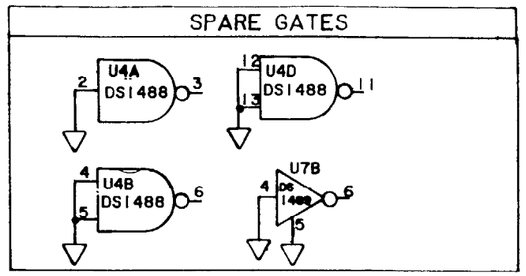

NOTES

UNLESS OTHERWISE SPECIFIED:

1. CAPACITANCE VALUES ARE IN MICROFARADS.
2. I.C. POWER CONNECTIONS ARE AS GIVEN IN CHART:

I.C. REFERENCE DESIGNATOR	-12V TO PIN	COMMON TO PIN	+5V TO PIN	+12V TO PIN
U2		17	1	
U4	1	7		14
U5		12	24	
U7		7	14	

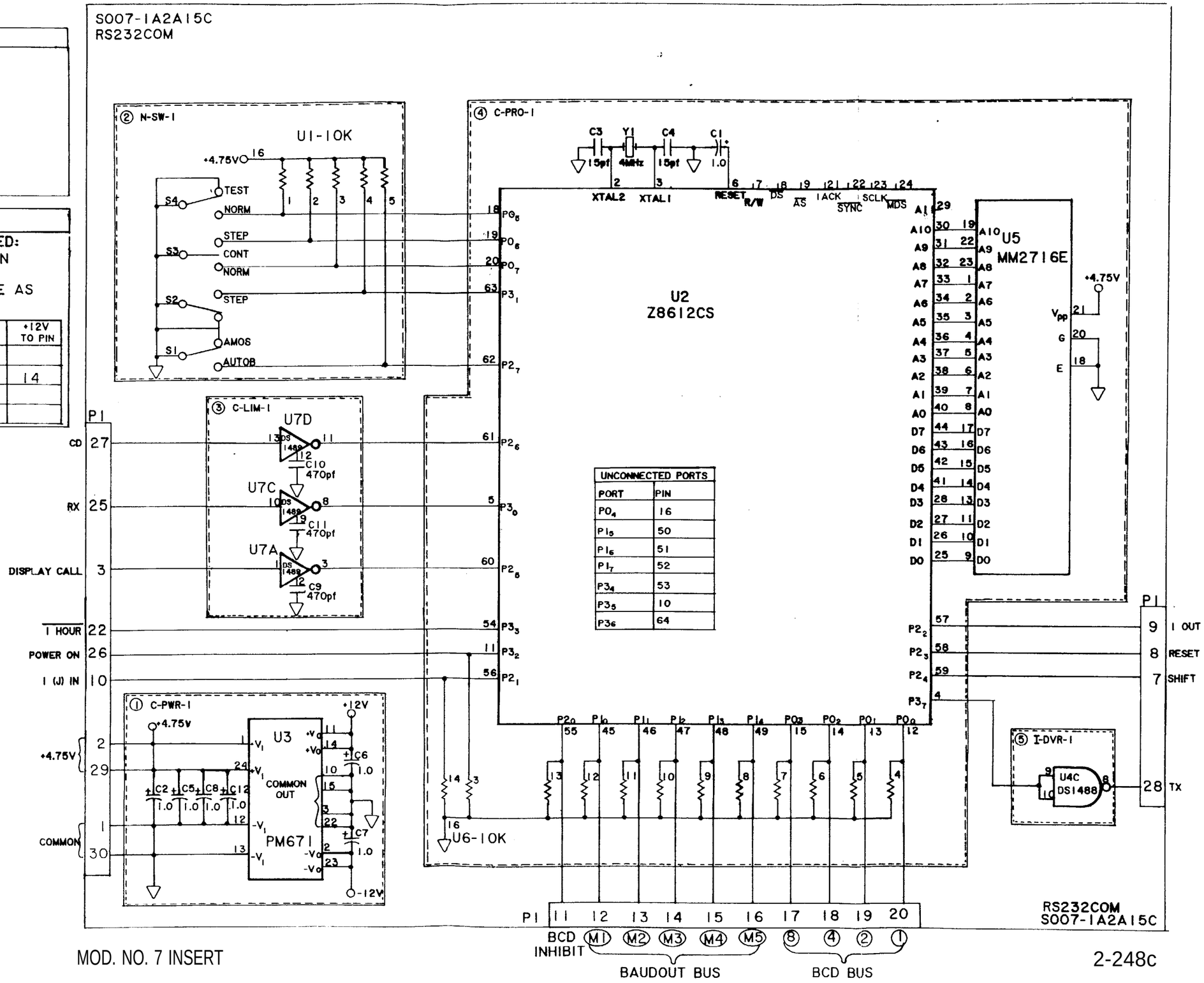

UNCONNECTED PORTS	
PORT	PIN
PO_4	16
PI_5	50
PI_6	51
PI_7	52
$P3_4$	53
$P3_5$	10
$P3_6$	64

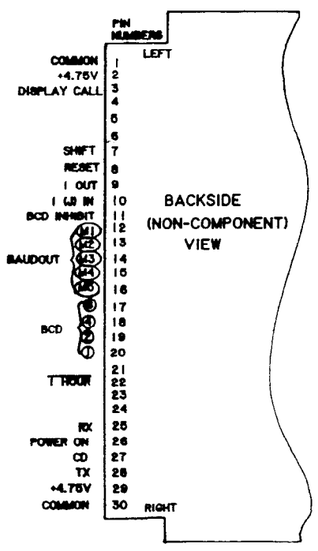

MOD. NO. 7 INSERT

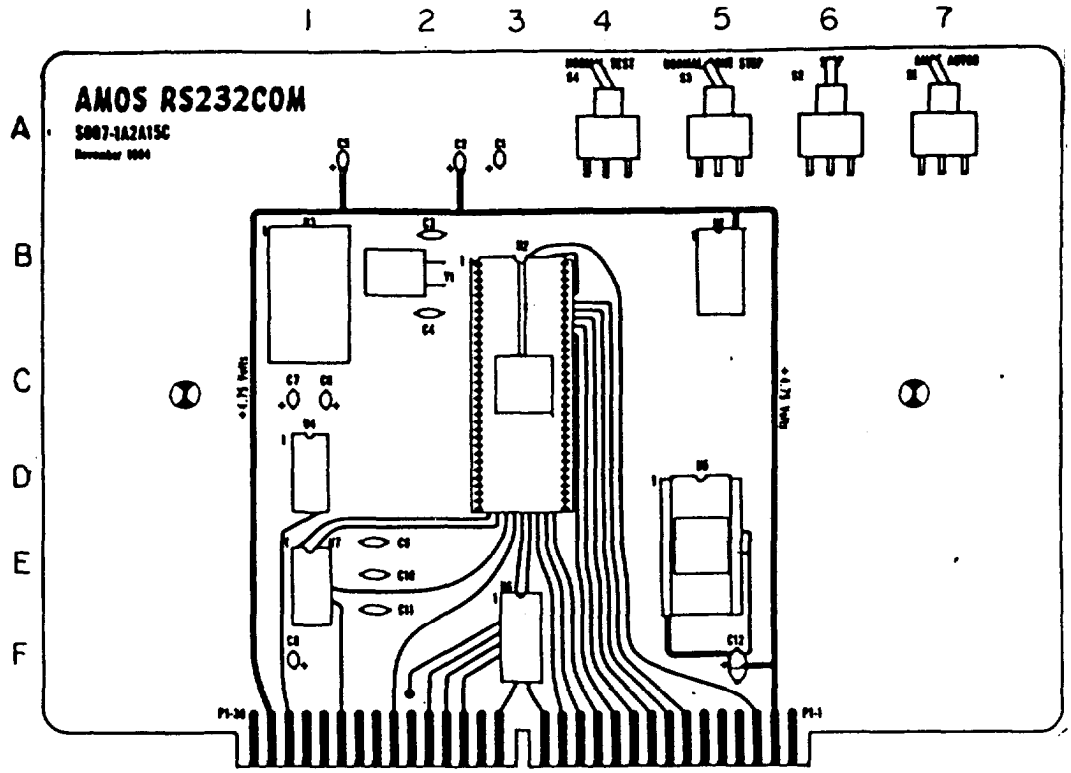

1A2A15C RS232COM

REF DESIG	LOCATING COORD	NAME AND DESCRIPTION
U1	B/5	RESISTOR NETWORK, 15x10K, BECKMAN 16-2-103
U2	C/1	Z8 MICROCOMPUTER, ZILOG Z8612CS
U3	B/1	5V TO ±12V CONVERTER, PACKAGED POWER PM671
U4	D/1	QUAD LINE DRIVER, MOTOROLA MC1488P
U5	E/5	2Kx8 EPROM, NATIONAL MM2716Q
U6	F/3	SAME AS U1
U7	E/1	QUAD LINE RECEIVER, MOTOROLA MC1489AP
S1	A/7	SPDT TOGGLE SWITCH, C&K 7101MD9AB
S2	A/6	SPDT PUSHBUTTON SWITCH, C&K 8121A
S3	A/5	SPDT CENTER OFF TOGGLE SWITCH, C&K 7103MD9AB
S4	A/4	SAME AS S1
C1	A/2	CAPACITOR, 1 uf, 35V
C2	A/2	SAME AS C1
C3	B/2	CAPACITOR, 15 pf, 1 KV
C4	B/2	SAME AS C3
C5	A/1	SAME AS C1
C6	C/1	SAME AS C1
C7	C/1	SAME AS C1
C8	F/1	SAME AS C1
C9	E/2	CAPACITOR, 470 pf, 1KV
C10	E/2	SAME AS C9
C11	E/2	SAME AS C9
C12	F/5	SAME AS C1
Y1	B/2	4.000 MHZ CRYSTAL, JAN CY3A

SOURCE FILE NAME: RS232C.ASM
AMOS MODIFICATION NO. 7: 110 BAUD ASCII

```
                ;        PORT ASSIGNMENTS:
                ;P0.0-3  BCD BUS
                ;P0.4    NOT USED
                ;P0.5    TEST SWITCH
                ;P0.6    MODE SWITCH, SINGLE_NOT
                ;P0.7    MODE SWITCH, NORMAL_NOT
                ;P1.0-4  BAUDOT BUS
                ;P1.5-7  NOT USED
                ;P2.0    BCD INHIBIT
                ;P2.1    1(J) INPUT
                ;P2.2    1 OUTPUT
                ;P2.3    RESET OUTPUT
                ;P2.4    SHIFT OUTPUT
                ;P2.5    DISPLAY CALL
                ;P2.6    CARRIER DETECT
                ;P2.7    AMOS/AUTOB_NOT SWITCH
                ;P3.0    SERIAL IN (IRQ3)
                ;P3.1    STEP PUSHBUTTON (IRQ2)
                ;P3.2    POWER ON (IRQ0)
                ;P3.3    HOUR_NOT (IRQ1-NOT USED)
                ;P3.4    NOT USED
                ;P3.5    STEP FLAG (USED INTERNALLY ONLY)
                ;P3.6    THREE FLAG (USED INTERNALLY ONLY)
                ;P3.7    SERIAL OUT (IRQ4)
                :        REGISTER ASSIGNMENTS:
                ;R0-3    PORTS 0-3
                ;R4      SHIFT PULSE TIMER (225 MILLISECOND MAXIMUM)
                ;R5      BAUDOT CASE (LOOKUP TABLE OFFSET)
                ;RR6     MESSAGE POINTER
                ;RR8     CODE CONVERSION (BCD -> BAUDOT -> ASCII)
                ;R1l     QUARTERSECOND COUNTER (1 MINUTE MAXIMUM)
                ;R12     MILLISECOND COUNTER (250 MILLISECOND MAXIMUM)
                ;R13     DEBOUNCE TIMER (255 MILLISECOND MAXIMUM)
                ;R14     DELAY TIMER (1 MINUTE MAXIMUM)
                ;R15     FAILSAFE TIMER (1 MINUTE MAXIMUM)
                ;SPH     CALL (PAST PORT 2)
 0020           T        EQU      20H       ;TEST
 0001           INH               1         ;BCD INHIBIT
 0008           R        EQU      8         ;RESET
 0010           SH                1OH       ;SHIFT
 0020           STEP     EQU      20H       ;STEP FLAG
 0040           THRE     EQU      40H       ;TRANSMIT HOLDING REGISTER EMPTY
 0000 0083              DW       IRQ0      ;POWER ON
 0002 000F              DW       IRQX      ;NOT USED
 0004 01E3              DW       IRQ2      ;STEP PUSHBUTTON
 0006 01F5              DW       IRQ3      ;SERIAL IN
 0008 0217              DW       IRQ4      ;SERIAL OUT
 000A 021B              DW       IRQ5      ;ONE MILLISECOND
 000C 8D0083            J P      IRQ0
 000F BF        IRQX:   IRET
```

SOURCE FILE NAME: RS232C.ASM
AMOS MODIFICATION NO. 7: 110 BAUD ASCII

```
0010 3139204A VERSION: DB     "19 JULY 1985"
OO1C 00C50A41 LET:     DB     0,197,10,65          ;NULL,E,LINEFEED,A
0020 A053C955          DB     160,83,201,85        ;SPACE,S,I,U
0024 8D44D2CA          DB     141,68,210,202       ;CAR.RET,D,R,J
0028 4EC6C34B          DB     78,198,195,75        ;N,F,C,K
002C D45ACCD7          DB     212,90,204,215       ;T,Z,L,W
0030 485950D1          DB     72,89,80,209         ;H,Y,P,Q
0034 CF424700          DB     207,66,71,0          ;O,B,G, (FIG.SHIFT)
0038 4DD85600          DB     77,216,86,0          ;M,X,V,(LET.SHIFT)
003C 2D330A2D FIG:     DB     45,51,10,45          ;-,3,LINEFEED,-
0040 A087B8B7          DB     160,135,184,183      ;SPACE,BELL,8,7
0044 8D24B427          DB     141,36,180,39        ;CAR.RET,$,4,QUOTE
0048 AC213A28          DB     172,33,58,40         ;COMMA,!,COLOR,(
004C 352BA9B2          DB     53,43,169,178        ;5,+,),2
0050 A33630B1          DB     163,54,48,177        ;#,6,0,1
0054 393FA600          DB     57,63,166,0          ;9,?,&,(FIG.SHIFT)
0058 2EAFBB00          DB     46,175,187,0         ;PERIOD,/,SEMI,(LS)
005C 16171301 DIGIT:   DB     22,23,19,1           ;0,1,2,3
0060 0A101507          DB     10,16,21,7           ;4,5,6,7
0064 06180E1E          DB     6,24,14,30           ;8,9,COLON,SEMICOLON
0068 0C03              DB     12,3                 ;COMMA,HYPHEN
006A 1C1D              DB     28,29                ;PERIOD,SOLIDUS
006C 0802      CARRY:  DB     8,2                  ;CARRIAGE RET,LINEFEED
006E 1F04      MSG:    DB     31,4                 ;LETTER SHIFT, SPACE
0070 031C1805  AMOS:   DB     3,28,24,5            ;A,M,O,S
0074 04                DB     4                    ;SPACE
0075 1B        ONE:    DB     27                   ;FIGURE SHIFT
0076           DATA:   DS     0                    ;AMOS DATA CHARACTERS
0076 04        QUIT:   DB     4                    ;END OF TRANSMISSION
0077 00                DB     0                    ;ONE SECOND GUARD TIME
0078 2B2B2B            DB     43,43,43             ;+++ ESCAPE CODE
007B 00                DB     0                    ;ONE SECOND GUARD TIME
007C 00        QUIT1:  DB     0                    ;ONE SECOND EXEC TIME
007D 41D4488D          DB     65,212,72,141        ;ATH(CR) HANGUP CODE
0081 0003              DB     0,3                  ;EXECUTION TIME, ETX
0083 E6F740    IRQ0:   LD     P3M,#40H             ;HI-Z PORT 2, PARITY OFF
0086 E6F84D            LD     P01M,#04DH           ;MAKE PORTS 0 & 1 INPUTS
0089 E6FF80            LD     SPL,#80H             ;STACK POINTER
008C B0FC              CLR    FLAGS                ;CLEAR FLAGS
008E E6FB3F            LD     IMR,#3FH             ;UNMASK ALL INTERRUPTS
0091 B0FA              CLR    IRQ                  ;CLEAR INTERRUPT REQS
0093 E6F90E            LD     IPR,#0EH             ;PRIORITY IRQ5,3,0,2,4,1
0096 E6F6E3            LD     P2M,#0E3H            ;PORT 2 I/O, BCD INH. IN
0099 E6F511            LD     PRE0,#11H            ;MOD 4 -> 8 MICROSECONDS
009C E6F447            LD     T0,#71               ;MOD 71 -> 568 MICROSECS
009F E6F317            LD     PRE1,#17H            ;MOD 5 -> 10 MICROSECS
00A2 E6F264            LD     T1,#100              ;MOD 100 -> 1 MILLISEC
00A5 E6F10F            LD     TMR, #0FH            ;LOAD & ENABLE TIMERS
```

SOURCE FILE NAME: RS232C.ASM
AMOS MODIFICATION ND. 7: 110 BAUD ASCII

```
00A8 3100                SRP     #0
00AA 29FE                LD      SPH,R2              ;INITIALIZE CALL
00AC 3C40                LD      R3,#THRE            ;INITIALIZE PORT 3 FLAGS
00AE 8C00                LD      R8,#HIGH LET        ;INITIALIZE TABLE PTR
00B0 DCFA                LD      R13,#250            ;INITIALIZE DEBOUNCER
00B2 9F                  EI                          ;ENABLE ALL INTERRUPTS
00B3 7C7C                LD      R7,#LOW QUIT1       ;SET MODEM BAUD RATE
00B5 D601DB              CALL    MODEM
00B8 2C09       RESET:   LD      R2,#INH OR R        ;SET BCD INHIBIT & RESET
00BA E6F6E2              LD      P2M,#0E2H           ;BCD INHIBIT OUTPUT
00BD E6F741              LD      P3M,#41H            ;PORT 2 ACTIVE
00C0 6C00                LD      R6,#HIGH MSG        ;INITIALIZE MESSAGE PTR
00C2 7C6E                LD      R7,#LOW MSG
00C4 8216                LDE     R1,@RR6             ;INITIALIZE BAUDOT BUS
00C6 E6F845              LD      P01M,#45H
00C9 FC28       FLLOAD:  LD      R15,#40             ; LOAD WITH 10 SECONDS
00CB 72FF       FLTEST:  TM      R15,R15             ;IF FAILSAFE TIMER IS 0,
00CD 6BE9                JR      Z,RESET             ; THEN RESET
00CF 76E208              TM      R2,#R               ;IF TRANSMITTING,
00D2 6B3E                JR      Z,RUN               ; SKIP TO RUN
00D4 76FE40              TM      SPH,#40H            ;IF NO CARRIER,
00D7 EB1A                JR      NZ,REQ              ; SKIP TO REQ
00D9 76E020              TM      R0,#T               ;IF NOT TEST MODE,
00DC EB04                JR      NZ,HANGUP
00DE 72EE                TM      R14,R14             ; AND NO ACTION,
00E0 6B05                JR      Z,HANGUP1
00E2 76F110     HANGUP:  TM      TMR, #I6            ;OR IF HANGUP FLAG SET,
00E5 6B0C                JR      Z,REQ
00E7 7C76       HANGUP1: LD      R7,#LOW QUIT        ; THEN HANGUP SEQUENCE
00E9 D601DB              CALL    MODEM
00EC 56F1EF              AND     TMR,#NOT 16         ; CLEAR HANGUP FLAG
00EF 29FE                LD      SPH,R2              ; UPDATE CALL
00F1 8BC5                JR      RESET               ; GO TO RESET
00F3 72DD       REQ:     TM      R13,R13             ;AND IF DEBOUNCED,
00F5 EBD2                JR      NZ,FLLOAD
00F7 A4E2FE              CP      SPH,R2              ;AND IF PORT 2 CHANGED,
00FA 6BCD                JR      EQ,FLLOAD
00FC DCFA                LD      R13,#250            ; RELOAD DEBOUNCER
00FE 70E2                PUSH    R2                  ; COMPUTE P2 NEG. TRAN.
0100 60FE                COM     SPH
0102 45FFFE              OR      SPH,@SPL
0105 E4FEFC              LD      FLAGS,SPH
0108 50FE                POP     SPH
010A DB06                JR      PL,RUN              ; JUMP IF DISPLAY CALL
010C 6BBB                JR      Z,FLLOAD            ; JUMP IF NO CAR. DET.
010E ECF0                LD      R14,#240            ; LOAD NO-ACTION TIMER
0110 8BB7                JR      FLLOAD              ; GO TO FLLOAD
```

SOURCE FILE NAME: RS232C.ASM
AMOS MODIFICATION NO. 7: 110 BAUD ASCII

```
0112  56E2F7    RUN:     AND     R2,#NOT R          ;CLEAR RESET
0115  ECF0               LD      R14,#240           ;MINUTE-NO-ACTION  TIMER
0117  76E320             TM      R3,#STEP           ;IF NOT STEPPED,
011A  EB06               JR      NZ,FETCH
011C  09FC               LD      FLAGS,R0           ;AND IN SINGLE STEP,
011E  6B02               JR      Z,FETCH            ;AND IN TEST MODE,
0120  5BA7               JR      MI,FLLOAD          ; THEN GO TO FLLOAD
0122  56E3DF    FETCH:   AND     R3,#NOT STEP       ;CLEAR STEP FLAG
0125  98E1               LD      R9,R1              ;FETCH BAUDOT BUS CHAR.
0127  56E91F             AND     R9,#1FH
012A  A6E91F             CP      R9,#31             ;IF LETTER SHIFT,
012D  EB04               JR      NE,FETCH1
012F  5C1C               LD      R5,#LOW LET        ; LOAD-LETTERS OFFSET
0131  8B17               JR      NEXT               ; GET NEXT CHARACTER
0133  A6E91B    FETCH1:  CP      R9,#27             ;IF FIGURE SHIFT,
0136  EB04               JR      NE,XMIT
0138  5C3C               LD      R5,#LOW FIG        ; LOAD FIGURES OFFSET
013A  8B0E               JR      NEXT               ; GET NEXT CHARACTER
013C  76E340    XMIT:    TM      R3,#THRE           ;WAIT FOR THRE
013F  6BFB               JR      Z,XMIT
0141  0295               ADD     R9,R5              ;ADD TABLE OFFSET
0143  8298               LDE     R9,@RR8            ;FETCH ASCII CODE
0145  56E3BF             AND     R3,#NOT THRE       ;CLEAR THRE
0148  99F0               LD      SIO,R9             ;LOAD UART
014A  76E202    NEXT:    TM      R2,#2              ;IF 1(J) INPUT,
014D  6B04               JR      Z,NEXT1
014F  7C6C               LD      R7,#LOW CARRY      ; POINT TO CARRY
0151  8B20               JR      INTERN             ; SKIP TO INTERN
0153  7E         NEXT1:  INC     R7                 ;INCREMENT MSG PTR
0154  A6E776             CP      R7,#LOW DATA       ;IF TWC CHARACTER,
0157  9B24               JR      GE, EXTERN
0159  A6E770             CP      R7,#LQW AMOS       ; IF A IN AMOS,
015C  EB0A               JR      NE,NEXT2
015E  76E280             TM      R2, #80H           ; AND IF AUTOB,
0161  EB10               JR      NZ,INTERN
0163  06E705             ADD     R7,#5              ;   SKIP OVER AMOS
0166  8B0B               JR      INTERN             ; SKIP TO INTERN
0168  A6E76E    NEXT2:   CP      R7,#LOW MSG        ;IF NOT END OF MESSAGE,
016B  EB06               JR      NE,INTERN          ; THEN SKIP TO INTERN
016D  66E0E0             TCM     R0,#0E0H           ;IF NOT CONTINUOUS MODE,
0170  ED00B8             JP      NZ,RESET           ; THEN RESET
0173  8216      INTERN:  LDE     R1,@RR6            ;FETCH  TC CHARACTER
0175  D601AB             CALL    SHIFT              ;OUTPUT SHIFT PULSE
0178  E6F6E2             LD      P2M,#0E2H          ;OUTPUT BCD INHIBIT
017B  8B1F               JR      BUSOUT             ;SKIP TO BUSOUT
```

SOURCE FILE NAME: RS232C.ASM
AMOS MODIFICATION NO. 7: 110 BAUD ASCII

```
017D 7C76       EXTERN: LD      R7,#LOW DATA        ;KEEP MSG PTR @ DATA
017F E6F6E3             LD      P2M,#0E3H           ;IF DATA BCD INHIBIT IN
0182 E6F84D             LD      P01M,#4DH           ; INPUT BAUDOT BUS
0185 D601AB             CALL    SHIFT               ; OUTPUT SHIFT PULSE
0188 4C02               LD      R4,#2               ; PROPAGATION DELAY
018A 7244       PROPDY: TM      R4,R4
018C EBFC               JR      NZ,PROPDY
018E 76E201             TM      R2,#INH             ; IF BCD INHIBIT,
0191 EB0C               JR      NZ,MODE             ;   SKIP TO MODE
0193 9C0F               LD      R9,#0FH             ; IF NOT BCD INHIBIT,
0195 5290               AND     R9,R0               ;   INPUT, MASK BCD BUS
0197 06E95C             ADD     R9,#LOW DIGIT       ;   ADD DIGIT OFFSET
019A 8218               LDE     R1,@RR8             ;   FETCH BAUDOT CODE
019C E6F845     BUSOUT: LD      P01M,#45H           ;   OUTPUT BAUDOT BUS
019F D601AE     MQDE:   CALL    SHIFT1              ;BETWEEN FUSES  DELAY
01A2 76E020             TM      R0,#T               ;IF IN TEST MDDE,
01A5 ED00C9             JP      NZ,FLLOAD           ; RELOAD FAILSAFE
01A8 8D00CB             JP      FLTEST              ;GO TEST FAILSAFE TIMER
01AB 46E210     SHIFT:  OR      R2,#SH              ;SHIFT HIGH
01AE 4C04       SHIFT1: LD      R4,#4               ;WAIT 4 MILLISECONDS
01B0 7244       SHIFT2: TM      R4,R4
01B2 EBFC               JR      NZ,SHIFT2
01B4 9CEB               LD      R9,#NOT(SH OR 4)    ;CLEAR SHIFT & 1 OUTPUT
01B6 5292               AND     R9,R2
01B8 A6E775             CP      R7,#LOW ONE         ;IF TIME FOR 1 OUTPUT,
01BB EB03               JR      NE,SHIFT3
01BD 46E904             OR      R9,#4               ; SET 1 OUTPUT
01C0 28E9       SHIFT3: LD      R2,R9
01C2 AF                 RET
01C3 A6E900     MODEM1: CP      R9,#0               ;IF NULL CODE,
01C6 EB08               JR      NE,MODEM3
01C8 EC05               LD      R14,#5              ; WAIT ONE SECOND
01CA 72EE       MODEM2: TM      R14,R14
01CC EBFC               JR      NZ,MODEM2
01CE 8B0A               JR      MODEM4              ; SKIP TO MODEM4
01D0 76E340     MODEM3: TM      R3,#THRE            ;WAIT FOR THRE
01D3 6BFB               JR      Z,MODEM3
01D5 56E3BF             AND     R3,#NOT THRE        ;CLEAR THRE
01D8 99F0               LD      SIO,R9              ;LOAD UART
01DA 7E         MODEM4: INC     R7                  ;INCREMENT CODE PTR
01DB 8296       MODEM:  LDE     R9,@RR6             ;FETCH MODEM CODE
01DD A6E903             CP      R9,#3               ;IF END OF CODE STRING,
01E0 EBE1               JR      NE,MODEM1
01E2 AF                 RET                         ; THEN RETURN
```

SOURCE FILE NAME: RS232C.ASM
AMOS MODIFICATION NO. 7: 110 BAUD ASCII

```
01E3 76E020    IRQ2:    TM      R0,#T              ;IF IN TEST MODE,
01E6 6B0C               JR      Z,IRQ21
01E8 72DD               TM      R13,R13            ;  AND IF DEBOUNCED,
01EA EB08               JR      NZ,IRQ21
01EC DCFA               LD      R13,#250           ;    RELOAD  DEBOUNCER
01EE 46E320             OR      R3,#STEP           ;    SET STEP FLAG
01F1 56E2F7             AND     R2, #NOT R         ;    CLEAR  RESET
01F4 BF        IRQ21:   IRET
01F5 ECF0      IRQ3:    LD      R14,#240           ;MINUTE NO-ACTION TIMER
01F7 A6F01B             CP      SIO,#27            ;IF RECEIVED = ESC,
01FA 6B05               JR      EQ,IRQ31
01FC A6F09B             CP      SIO,#27+128
01FF EB03               JR      NE,IRQ32
0201 46F110    IRQ31:   OR      TMR, #16           ; SET HANGUP FLAG
0204 76E020    IRQ32:   TM      R0,#T              ;IF NOT IN TEST,
0207 EB0D               JR      NZ,IRQ34
0209 A6F04F             CP      SIO,#'O'           ;AND IF RECEIVED = O,
020C 6B05               JR      EQ,IRQ33
020E A6F0CF             CP      SIO,#'O'+128
0211 EB03               JR      NE,IRQ34
0213 56E2F7    IRQ33:   AND     R2,#NOT R          ;    CLEAR  RESET
0216 BF        IRQ34:   IRET
0217 46E340    IRQ4:    OR      R3,#THRE           ;SET THRE
021A BF                 IRET
021B 7244      IRQ5:    TM      R4,R4              ;DECREMENT NZ SHIFT TMR
021D 6B02               JR      Z,IRQ51
021F 00E4               DEC     R4
0221 72DD      IRQ51:   TM      R13,R13            ;DECREMENT NZ DEBOUNCER
0223 6B02               JR      Z,IRQ52
0225 00ED               DEC     R13
0227 CE        IRQ52:   INC     R12                ;INCR MILLISECOND CTR
0228 A6ECFA             CP      R12,#250           ;CORRECT FOR OVERFLOW
022B EB16               JR      NE,IRQ55
022D B0EC               CLR     R12
022F BE                 INC     R11                ;INCR QUARTERSECOND CTR
0230 A6EBF0             CP      R11,#240           ;CORRECT FOR OVERFLOW
0233 EB02               JR      NE,IRQ53
0235 B0EB               CLR     R11
0237 72EE      IRQ53:   TM      R14,R14            ;DECREMENT NZ DELAY TMR
0239 6B02               JR      Z,IRQ54
023B 00EE               DEC     R14
023D 72FF      IRQ54:   TM      R15,R15            ;DECREMENT NZ FAILSAFE
023F 6B02               JR      Z,IRQ55
0241 00EF               DEC     R15
0243 BF        IRQ55:   IRET
0000                    END
```

SOURCE FILE NAME: RS232C.ASM
---- SYMBOL TABLE----

AMOS	0070	IRQ33	0213	PRE0	00F5
BUSOUT	019C	IRQ34	0216	PRE1	00F3
CARRY	006C	IRQ4	0217	PROPDY	018A
DATA	0076	IRQ5	021B	QUIT	0076
DIGIT	005C	IRQ51	0221	QUIT1	007C
EXTERN	017D	IRQ52	0227	R	0008
FETCH	0122	IRQ53	0237	REQ	00F3
FETCH1	0133	IRQ54	023D	RESET	00B8
FIG	003C	IRQ55	0243	RUN	0112
FLAGS	00FC	IRQX	000F	SH	0010
FLLOAD	00C9	LET	001C	SHIFT	01AB
FLTEST	00CB	MODE	019F	SHIFT1	01AE
HANGUP	00E2	MODEM	01DB	SHIFT2	01B0
HANGUP1	00E7	MODEM1	01C3	SHIFT3	01C0
IMR	00FB	MODEM2	01CA	SIO	00F0
INH	0001	MODEM3	01D0	SPH	00FE
INTERN	0173	MODEM4	01DA	SPL	00FF
IPR	00F9	MSG	006E	STEP	0020
IRQ	00FA	NEXT	014A	T	0020
IRQ0	0083	NEXT1	0153	T0	00F4
IRQ2	01E3	NEXT2	0168	T1	00F2
IRQ21	01F4	ONE	0075	THRE	0040
IRQ3	01F5	P01M	00F8	TMR	00F1
IRQ31	0201	P2M	00F6	VERSION	0010
IRQ32	0204	P3M	00F7	XMIT	013C

UNITED STATES DEPARTMENT OF COMMERCE
National Oceanic and Atmospheric Administration
NATIONAL WEATHER SERVICE
Silver Spring Md. 20910

OA/W5141 - JM

June 6, 1980

TO: All NWS Regional Headquarters, Area Electronics Supervisors, and Electronics Technicians (EHB-11 Distribution)

FROM: OA/W51 - J.M. St. Clair

SUBJECT: Transmittal Memorandum for Engineering Handbook No. 11, Issuance 80- 3

1. Material Transmitted:

Engineering Handbook No. 11 - Automatic Observing Equipment, Section 1.5; Errata Sheet #1 to MED Manual.

2. Summary:

Errata Sheet #1 to MED Manual instructs Electronics Technicians to make pen and ink corrections.

3. Effect on Other Instructions:

None.

W514

ERRATA SHEET No. 1 to MED MANUAL

An error exists in the preliminary Support Volume #1 that was received with the equipment, and with the permanent Support Volume #1 that will be distributed to the field when released by the publisher.

In the preliminary manual refer to Page 5-14. In the permanent manual refer to Page 5-15, Reference Par. (2): Change the designations A, B, and C of Switch S1 as follows:

A=3, B=2, C=1

Also change the designations in Table under S1 Section of Par. (2).

UNITED STATES DEPARTMENT OF COMMERCE
National Oceanic and Atmospheric Administration
NATIONAL WEATHER SERVICE
Silver Sprlng, Md. 20910

OA/W5141 - JM

November 18, 1980

TO: All NWS Regional Headquarters, Area Electronics Supervisors, and Electronics Technicians (EHB-11 Distribution)

FROM: OA/W51 - J. M. St. Clair

SUBJECT: Transmittal Memorandum for Engineering Handbook No. 11, Issuance 80-9

1. Material Transmitted:

Engineering Handbook No. 11 - Automatic Observing Equipment, Section 1.5; Change to Table of Contents, MED Manual Type A, Volume I.

2. Summary:

Table of Contents, Pages i and ii have been revised. Discard original from Manual and replace with attached revised page.

3. Effect on Other Instructions:

None.

Attachment: 1-Revised Pages i and ii

EHB-11
Issuance 80-9

TABLE OF CONTENTS

Section	Page
LIST OF ILLUSTRATIONS	ii
LIST OF TABLES	ii
FUNCTIONAL INDEX	iii
FOREWORD	iv
1 GENERAL INFORMATION	1-1
1-1 Introduction	1-1
1-2 Equipment Description	1-1
1-3 Reference Data	1-4
1-4 Equipment, Accessories, and Documents Available	1-6
1-5 User-Level Spares	1-6
1-6 Depot-Level Spares	1-7
2 OPERATION	2-1
2-1 Description of Controls and Indicators	2-1
2-2 Operating Procedure	2-2
3 THEORY OF OPERATION	3-1
3-1 Introduction	3-1
3-2 Data Exchange	3-1
3-3 Transmitting a Teletype Signal	3-3
3-4 Central Processing Unit Timing	3-4
3-5 Data and Address Buses	3-9
3-6 Input/Output Ports	3-9
3-7 Display Format	3-9
3-8 MED Functioning	3-10
4 SCHEDULED MAINTENANCE	4-1
4-1 Plan for Preventive Maintenance	4-1
4-2 Performance Check	4-1
4-3 Cleaning	4-5
4-4 Power Supply Voltage Checks	4-5
4-5 Battery Replacement	4-5
5 INSTALLATION	5-1
5-1 Introduction	5-1
5-2 Site Selection	5-1
5-3 AMOS-MED Installation	5-1
5-4 RAMOS-MED Installation	5-8
APPENDIX A - INTEGRATED CIRCUIT DATA	A-1
APPENDIX B - VENDER DATA	B-1

THIS MANUAL HAS BEEN PREPARED
FOR THE
NATIONAL WEATHER SERVICE
BY
NATIONAL DESIGNERS, INC.
146 N. 13th Street
Philadelphia PA. 19454
UNDER SUB-CONTRACT
TO
LA BARGE INC. ELECTRONICS DIVISION
Tulsa, Oklahoma

Revised 10/20/80

LIST OF ILLUSTRATIONS

Number	Title	Page
1-1	MED Relationship to Other Equipment	1-0
1-2	MED Assembly, Location of Major Components	1-2
1-3	Communications Assembly-Type V (Half Duplex)	1-5
2-1	MED Cabinet Assembly, Front Panel Controls and Indicators	2-3
2-2	MED Cabinet Assembly, Rear Panel Controls and Indicators	2-4
3-1	BAUDOT Coding	3-2
3-2	ASCII Code	3-3
3-3	Basic Half-Duplex Circuit	3-4
3-4	CPU Instruction Timing Waveforms	3-5
3-5	CPU Instruction Time States	3-7
3-6	Display Format	3-9
3-7	AMOS-MED Overall Function Diagram	3-11
3-8	RAMOS-MED Overall Function Diagram	3-13
5-1	MED Rear View	5-2
5-2	MED Top View	5-3
5-3	Interconnecting Cabling Diagram	5-5
5-4	AMOS Connections	5-6
5-5	Communications Assembly-Type V (Half Duplex)	5-11
5-6	RAMOS-MED Interface Printed Wiring Board 1A3	5-14

LIST OF TABLES

Number	Title	Page
1-1	Reference Data	1-4
1-4	Equipment, Accessories, and Documents Available	1-6
1-3	On-Site Spares	1-6
1-4	Depot-Level Spares	1-7
2-1	MED Operating Controls and Indicators	2-1
4-1	Plan for Preventive Maintenance	4-1
4-2	AMOS-MED Performance Check	4-1
4-3	RAMOS-MED Performance Check	4-3
5-1	AMOS-MED On-Site Spares	5-1
5-2	AMOS-MED Connections	5-6
5-3	MED-Teletype Connections	5-7
5-4	RAMOS-MED On-Site Spares	5-9