U.S. DEPARTMENT OF COMMERCE
National Oceanic and Atmospheric Administration
NATIONAL WEATHER SERVICE
Silver Spring, Md. 20910

MEMORANDUM FOR: All NWS Regional Headquarters, Regional Maintenance Specialists, Electronic Systems Analysts, and Electronics Technicians [Engineering Handbook (EHB)-13, Series II distribution]

FROM: W/OPS1 - John McNulty

SUBJECT: Transmittal Memorandum for EHB-13 Series II, Issuance 01-20

1. Material Transmitted:

Engineering Handbook No. 13 Series II, Advanced Weather Interactive Processing System (AWIPS), Section 4.0, AWIPS Contractor Interface Note 11, De-installation Procedure for the FTS2001 Transition Equipment.

2. Summary:

AWIPS Contractor Interface Note 11 provides site specific instruction on de-installing FTS2001 transition equipment.

3. Effect on Other Instructions:

None. File this note in EHB-13, Series II, Section 4.0.

SUBJECT	:	De-Installing FTS2001 Transition Equipment
PURPOSE	:	To provide FTS2001 transition equipment de-installation instructions
AUTHORIZING DOCUMENT	:	NWS 626, Rev A
SECURITY LEVEL	:	N/A
EQUIPMENT AFFECTED	:	AWIPS FTS2001 equipment
SITES AFFECTED	:	All Weather Forecast Offices (WFO), Regional Headquarters, National Centers, and National Weather Service Training Center.
REQUIRED ITEMS	:	All items have been supplied by PRC.
TOOLS AND TEST EQUIPMENT REQUIRED	:	Medium and small sized flat tip and Philip screwdrivers
TIME REQUIRED	:	Approximately 1 hour
EFFECT ON OTHER INSTRUCTIONS	:	None
VERIFICATION STATEMENT	:	This procedure was performed and verified at the McLean, VA test bed.
TECHNICAL SUPPORT	:	For questions or problems regarding these installation instructions or performing this procedure, please contact the NCF at 301-713-3501

General

This contractor interface note provides site specific FTS2001 transition equipment de-installation instructions. The procedures are organized in the following manner.

Attachment	Office(s)
B	WFOs, RH, NC, NWSTC
C	San Juan
D	Alaska
E	Guam

REPORTING MODIFICATION

Report the completed modification on a WS Form A-26, Maintenance Record according to instructions in Engineering Handbook 4 (EHB-4), Engineering Management Reporting System (EMRS), Part 2, and appendix I. A sample A-26 form is attached. As an additional guide, use the information in the table below.

Block #	Block Type	Information
5	Description	De-installation of FTS2001 transition equipment.
7	Equipment Code	AWIPS
8	Serial Number	001
15	Comments	De-installed FTS2001 transition equipment I.A.W. AWIPS Contractor Interface Note 11
17a	Mod. No.	CI11

John McNulty
Chief, Maintenance, Logistics, & Acquisition Division

Attachment A - A-26 Form
Attachment B through E - FTS2001 de-installation procedures

ATTACHMENT A

WS FORM A25 (6/91)

U.S. DEPARTMENT OF COMMERCE
NATIONAL OCEANIC AND ATMOSPHERIC ADMINISTRATION
NATIONAL WEATHER SERVICE

ENGINEERING MANAGEMENT REPORTING SYSTEM
MAINTENANCE RECORD

Document Number: G 49978

General Information

1. Open Date: 09/ 23 / 01 | Time: 0900
2. Initials: DKR
3. Response Priority (Check One): Immediate / Routine / Low / No Applicable
4. Close Date: 09 / 23 / 01 | Time: 1000

5. Description: DE-INSTALLATION OF FTS2001 TRANSITION EQUIPMENT

Equipment Information

6. Station ID	7. Equipment Code	8. Serial Number	9. TM	10. AT	11. Hrs. Mal.
CTP	AWIPS	001	M	M	999

12. EQUIPMENT OPERATIONAL STATUS TIMES

a. Fully Operational	b. Logistics Delay	Partly Operational c. All Other	d. Logistics Delay	Not Operational e. All Other

13. Parts Failure Information

Block #	a. ASN	b. NSN	c. TM	d. AT	e. Hrs. Mal.	f. Qty.	g. Maint. Hrs.
1							
2							
3							
4							
5							

14. Work Load Information

Type	Staff Hrs.
a. Routine	
b. Non-routine	
c. Travel	
d. Misc.	1:00
e. Overtime	

Miscellaneous Information

15. Maintenance Comments: DE-INSTALLED FTS2001 TRANSITION EQUIPMENT IAW AWIPS CONTRACT INTERFACE NOTE 11

16. Initials: DKR

17. SPECIAL PURPOSE REPORTING

18. CONFIGURATION MGMT. REPORTING (see instructions)

a. Mod. No.	b. Mod/Mod Effect Date	c.	d.	e.
CI11	09/23/01			

ASN	Vendor Part Number (New Part)	Serial Number (Old Part)	Serial Number (New Part)

Sample

ATTACHMENT B

AWIPS
. . . Advanced Weather Interactive Processing System

Operations and Maintenance Phase

De-installation Procedures for the FTS2001 Transition Equipment at Weather Forecast Offices, Regional Headquarters, National Centers (NCs), and the National Weather Service Training Center (NWSTC)

16 July 2001

Contract No. 50-SPNA-3-00001
ECP-008

Doc. ID No. AWP.PRO.DEINS.ECP8-01.00

Prepared for
AWIPS Systems Acquisition Office
National Oceanic and Atmospheric Administration
U.S. Department of Commerce

This data, furnished in connection with Contract Number 50-SPNA-3-00001, shall not be duplicated, used, or disclosed outside the Government in whole or in part for any purpose other than to the extent provided in the contract. This restriction does not limit the Government's right to use information contained in the data if it is obtained from another source, to furnish data to the Government support contractors with whom PRC Inc. has signed a written nondisclosure agreement, or to comply with the provisions of the Freedom of Information Act.

1500 PRC Drive
McLean, Virginia 22102

De-installation Procedures for the FTS2001 Transition Equipment at Weather Forecast Offices (WFOs), Regional Headquarters (RHs), National Centers (NCs), and the National Weather Service Training Center (NWSTC)

Note: This Procedure does not apply to the Alaska Region sites (VRH, AFG, AJK), the Pacific Region sites (PBP, HFO, GUM) or San Juan

Stage 0.0 Prepare for de-install

0.1 **ESA -** Telephone the NCF at (301) 713-3501 to notify them that you are ready to de-install the FTS2001 transition equipment.

0.2 **ESA -** Verify that all Switch Panel # 1's (VIR1) switch modules are in the "A" position.

0.3 **NCF -** Establish a telnet session with the site's routers.

0.4 **ESA -** Verify SDS connectivity to the NCF from the Adtran front panel.

Note: If the Adtran is not displaying the main menu, as shown below, press the "**cancel**" key on the front panel to reach the main menu

```
1=STATUS       2=TEST
3=CONFIG       4=DIAL

Select option #4=Dial – press Enter

1= DIAL STORED #
2= ENTER DIAL #

Select option #2=Enter Dial # - press enter

Enter 7008990070 or 7008990069           /* NCF's Adtran #1 or #3 */
```

Display shows # being dialed and should display "**Data Mode - loop is normal**" when the connection is established.

0.5 **NCF -** Verify that the Adtran is connected to the NCF.

```
router1-site> show interface s1          /* show interface s1/1/1 for NCs */

Serial1 is up, line protocol is down
 [output cut]...
 Description: SDS #1 interface, area backup
 [output cut]...
 DCD=up  DSR=up  DTR=up  RTS=up  CTS=up
```

0.6 **ESA -** Disconnect the SDS circuit.

Press the "#" key on the Adtran front panel key pad.
The LCD will show

1 = HANG UP
2 = STAY ON LINE

Press the "1" key and then the "ENTER" key on the Adtran front panel keypad.

0.7 **NCF -** Verify that the SDS connection is down.

```
router1-site> show interface s1          /* show interface s1/1/1 for NCs */

Serial1 is down, line protocol is down
[output cut]...
description: SDS #1 interface, area backup
[output cut]...
CD=down DSR=up DTR=up  RTS=up  CTS=down
```

0.8 **NCF -** Verify the site's WAN access status.

Using the telnet session with router 2, verify connectivity to the site's secondary RFC.

router2-site> **show ip ospf neighbor**

The result of the "**show ip ospf neighbor**" command should be similar to one of the following examples (where the ip address to the left of *Serial1/1/0.1* or *Serial0.1* is the ip address of the directly connected RFC):

For National Centers:

```
router2-spcr> show ip ospf neighbor

Neighbor ID     Pri   State           Dead Time   Address         Interface
1.4.7.49          1   FULL/BDR        00:00:31    165.92.115.201  Ethernet0/0/1
1.4.7.49          1   FULL/DR         00:00:31    165.92.114.71   FDDI0/1/0
1.4.7.49          1   FULL/DR         00:00:31    165.92.115.72   FDDI1/0/0
205.156.59.145    1   FULL/  -        00:01:47    205.156.62.181  Serial1/1/0.1
```

For all other sites:

```
router2-ama> show ip ospf neigbor

Neighbor ID     Pri   State           Dead Time   Address         Interface
1.4.7.9           1   FULL/DR         00:00:31    165.92.116.71   Ethernet0
1.4.7.9           1   FULL/BDR        00:00:33    165.92.116.201  Ethernet1
205.156.59.141    1   FULL/  -        00:01:49    205.156.62.161  Serial0.1
```

Using the telnet session with router 1, verify connectivity to the site's primary RFC;

router1-site> **show ip ospf neighbor**
As above, the result of the "**show ip ospf neighbor**" command should be similar to one of the following examples (where the ip address to the left of *Serial1/1/0.1* or *Serial0.1* is the ip address of the directly connected RFC):

For National Centers:

```
router1-spcr> show ip ospf neighbor

Neighbor ID     Pri   State           Dead Time   Address         Interface
1.4.7.53          1   FULL/DR         00:00:31    165.92.115.202  Ethernet0/0/1
1.4.7.53          1   FULL/BDR        00:00:31    165.92.114.72   FDDI0/1/0
1.4.7.53          1   FULL/BDR        00:00:31    165.92.115.71   FDDI1/0/0
205.156.59.145    1   FULL/  -        00:01:47    205.156.62.149  Serial1/1/0.1
```

For all other sites:

```
router1-ama> show ip ospf neighbor

Neighbor ID     Pri   State           Dead Time   Address         Interface
1.4.7.13          1   FULL/BDR        00:00:31    165.92.116.72   Ethernet0
1.4.7.13          1   FULL/DR         00:00:31    165.92.116.202  Ethernet1
205.156.59.145    1   FULL/  -        00:01:47    205.156.62.129  Serial0.1
```

0.9 **NCF -** If the result of either "**show ip ospf neighbor**" in Step 0.8 do not match the appropriate example, correct the problem before proceeding.

Stage 1.0 De-install the transition equipment associated with the Frame Relay "B" circuit.

1.1 This stage will break the Frame Relay Port B connection to the WAN.

1.1.1 **NCF -** Verify that Frame Relay A is up.

router1-site> **show interface s0**

```
router1-site> show interface s0          /* show interface s1/1/0 for NCs */

       Serial0 is up, line protocol is up
       [output cut]...
       Description: interface to EPSS port A
       [output cut]...
       DCD=up  DSR=up  DTR=up  RTS=up  CTS=up
```

1.1.2 **NCF -** Continue to monitor router 1's serial 0 interface while the ESA completes Step 1.1.3 and Step 1.1.4.

1.1.3 **ESA -** Remove the WA1AW35T cable between switch module 5 Modem port and switch module 10 Modem port.

1.1.4 **ESA -** Disconnect the WA1AW8 cable from switch module 10 Port A, re-label it with the new WA1AW8 labels and reconnect it to switch module 5 Modem port (The other end of this cable should stay connected to the Larscom CSU/DSU, port 2).

1.1.5 **NCF -** Verify that Frame Relay "B" is back up;

router2-site> **show interface s0**

```
       router2-site> show interface s0      /* show interface s1/1/0 for NCs */

       Serial0 is up, line protocol is up
       [output cut]...
       Description: interface to EPSS port B
       [output cut]...
       DCD=up  DSR=up  DTR=up  RTS=up  CTS=up
```

Note: If you do not see the correct status of router 2's serial 0 interface, have the ESA verify that the proper cables were moved and that the WA1AW8 cable is connected to the correct port on the Switch Panel.

Stage 2.0 De-install the transition equipment associated with the Frame Relay "A" circuit.

2.1 This stage will break the Frame Relay Port A connection to the WAN.

2.1.1 **NCF -** Verify that Frame Relay B is still up.

router2-site> **show interface s0**

```
router2-site> show interface s0      /* show interface s1/1/0 for NCs */

Serial0 is up, line protocol is up
[output cut]...
Description: interface to EPSS port B
[output cut]...
DCD=up  DSR=up  DTR=up  RTS=up  CTS=up
```

2.1.2 **NCF -** Continue to monitor router 2's serial 0 interface while the ESA completes Step 2.1.3 and Step 2.1.4.

2.1.3 **ESA -** Remove the WA1AW34T cable between switch module 4 Modem port and switch module 9 Modem port.

2.1.4 **ESA -** Disconnect the WA1AW9 cable from switch module 9 Port A, re-label it with the new WA1AW9 labels and reconnect it to switch module 4 Modem port (The other end of this cable should stay connected to the Larscom CSU/DSU, port 1).

2.1.5 **NCF -** Verify that Frame Relay A is back up.

router1-site> **show interface s0**

```
router1-site> show interface s0      /* show interface s1/1/0 for NCs */

Serial0 is up, line protocol is up
```

```
[output cut]...
Description: interface to EPSS port A
[output cut]...
DCD=up  DSR=up  DTR=up  RTS=up  CTS=up
```

Note: If you do not see the correct status of router 1's serial 0 interface, have the ESA verify that the proper cables were moved and that the WA1AW9 cable is connected to the correct port on the Switch Panel.

Stage 3.0 De-install the transition equipment associated with the Switched 56K circuit.

3.1 Relocate the SDS circuit cabling.

3.1.1 **ESA -** Remove the WA1AW36T cable between switch module 7 Modem port and switch module 14 Modem port.

3.1.2 **ESA -** Disconnect the WA1AW7 cable from switch module 14 Port A, re-label it with the new WA1AW7 labels and reconnect it to switch module 7 Modem port (The other end of this cable should stay connected to the Adtran CSU/DSU, V.35 port).

3.1.3 **NCF –** Rlogin to the site's AS1 server and establish a telnet session with Xyplex port 15 (the Adtran CSU/DSU control port).

```
as1-site:ncfuser:147$ telnet xyplex1 2000
Trying...
Connected to xyplex1.
Escape character is '^]'.

#access                                    /* enter access */

                         Welcome to AWIPS


Enter username> awips
Xyplex> c xyplex1:3500                     /* xyplex port# 15 */
Xyplex -010- Session 1 to XYPLEX1:3500 established

[Press the enter key several times to display the menu]
```

Note: If you do not see the following menu, have the ESA check the cable between Xyplex port# 15 and the Adtran CSU/DSU control port (verifying the cable orientation is correct and the connectors are firmly seated) and the power on the Adtran CSU/DSU.

```
DSU IV ESP TERMINAL MENU

1 STATUS
2 LOCAL CONFIG
3 REMOTE CONFIG
4 LOCAL TEST
5 REMOTE TEST
6 DIAL SW56

-------------------------
-------------------------
ESC = EXIT           ENTER SELECTION ->

              Select 6            /* NCF, press '6' and then 'enter' key */

****  next screen is  ******************


DSU IV ESP DIALING MENU

1 DIAL STORED NUMBER
2 MANUAL DIAL ENTRY

              Select 2            /* NCF, press '2' and then 'enter' key */

****  next screen is  ******************

DSU IV ESP MANUAL DIALING

------------------------
------------------------
              ENTER NUMBER TO DIAL -> 7009980865  OR 7009980864
                                                  /* NCF Adtran #2 or #4 */
```

Note: If it shows remote busy, then try to dial the other 700 number. If the screen shows remote answered then proceed to the next step.

3.1.4 **NCF -** Verify that the Adtran is connected to the NCF.

```
router1-site> show interface s1   /* show interface s1/1/1 for NCs */

Serial1 is up, line protocol is down
 [output cut]...
 Description: SDS #1 interface, area backup
 [output cut]...
 DCD=up  DSR=up  DTR=up  RTS=up  CTS=up
```

3.1.5 **NCF -** Disconnect the SDS connection.

Enter "ESC" key to exit.	/* returns to Main Menu*/
Enter 6	/* 6 = Dial SW56 */
Enter 1 to hang up	/* 1 = Hang up line */
Enter "ESC" key to exit	
Enter ~ <cr>	

```
xyplex> set priv system
xyplex>> lo po 15
xyplex>> quit
```

3.1.6 **NCF -** Verify that the SDS connection is down.

```
router1-site> show interface s1   /* show interface s1/1/1 for NCs */

Serial1 is down, line protocol is down
[output cut]...
description: SDS #1 interface, area backup
[output cut]...
CD=down DSR=up DTR=up  RTS=up  CTS=down
```

Stage 4.0 Complete the de-installation

4.1 Remove the excess cables and switch modules.

4.1.1 **ESA -** Remove the WA1AW44T cable between switch module 9 port B and the Paradyne CSU/DSU port 1.

4.1.2 **ESA -** Remove the WA1AW45T cable between switch module 10 port B and the Paradyne CSU/DSU port 2.

4.1.3 **ESA -** Remove the WA1AW40T cable between switch module 14 port B and the CM-1056 V.35 port.

4.1.4 **ESA -** Remove the V.35 adapter modules from the "A", "B" and Modem connectors of switch module 14.

4.1.5 **ESA -** Disconnect the power to SwPnl 1.

4.1.6 **ESA -** Remove the RS-530 switch modules from SwPnl1 slots 9 and 10. Retain these modules for possible future use.

4.1.7 **ESA -** Remove the V.35 switch module from SwPnl1 slot 14.

4.1.8 **ESA -** Reinstall the switch module blank panels, removed during installation, over SwPnl1 slots 9, 10 and 14.

4.1.9 **ESA -** Reconnect the power to SwPnl 1.

4.1.10 **ESA -** Disconnect the M&C cable from the dial port of the CM-1056

4.1.11 **ESA -** At the Monitor and Control Terminal Server (Xyplex), disconnect cable LA1CW102T from port 3.

4.1.12 **ESA -** Remove the CM-1056 M&C cable from the system. This cable is of no further use, so it is up to each site's discretion the method used to de-install the cable.

4.1.13 **ESA -** Notify the NCF that the de-install process is complete.

Stage 5.0 Verify that the site's WAN connectivity has been fully restored.

5.1 Determine the status of the Permanent Virtual Circuits (PVCs).

5.1.1 **NCF -** Verify connectivity to the site's primary RFC.

router1-site> **show ip ospf neighbor**

As in Stage 0.0, the result of the "**show ip ospf neighbor**" command should be similar to one of the following examples (where the ip address to the left of *Serial1/1/0.1* or *Serial0.1* is the ip address of the directly connected RFC).

For National Centers:

```
router1-spcr> show ip ospf neighbor

Neighbor ID     Pri   State           Dead Time   Address         Interface
1.4.7.53          1   FULL/DR         00:00:31    165.92.115.202  Ethernet0/0/1
1.4.7.53          1   FULL/BDR        00:00:31    165.92.114.72   FDDI0/1/0
1.4.7.53          1   FULL/BDR        00:00:31    165.92.115.71   FDDI1/0/0
205.156.59.145    1   FULL/  -        00:01:47    205.156.62.149  Serial1/1/0.1
```

For all other sites:

```
router1-ama> show ip ospf neighbor

Neighbor ID     Pri   State           Dead Time   Address         Interface
1.4.7.13          1   FULL/BDR        00:00:31    165.92.116.72   Ethernet0
1.4.7.13          1   FULL/DR         00:00:31    165.92.116.202  Ethernet1
205.156.59.145    1   FULL/  -        00:01:47    205.156.62.129  Serial0.1
```

5.1.2 **NCF -** Verify connectivity to the site's secondary RFC.

router2-site> **show ip ospf neighbor**

As above, the result of the "**show ip ospf neighbor**" command should be similar to one of the following examples (where the ip address to the left of *Serial1/1/0.1* or *Serial0.1* is the ip address of the directly connected RFC):

For National Centers:

```
router2-spcr> show ip ospf neighbor

Neighbor ID     Pri   State           Dead Time   Address         Interface
1.4.7.49          1   FULL/BDR        00:00:31    165.92.115.201  Ethernet0/0/1
1.4.7.49          1   FULL/DR         00:00:31    165.92.114.71   FDDI0/1/0
1.4.7.49          1   FULL/DR         00:00:31    165.92.115.72   FDDI1/0/0
205.156.59.145    1   FULL/  -        00:01:47    205.156.62.181  Serial1/1/0.1
```

For all other sites:

```
router2-ama> show ip ospf neighbor

Neighbor ID     Pri   State           Dead Time   Address         Interface
1.4.7.9           1   FULL/DR         00:00:31    165.92.116.71   Ethernet0
1.4.7.9           1   FULL/BDR        00:00:33    165.92.116.201  Ethernet1
205.156.59.141    1   FULL/  -        00:01:49    205.156.62.161  Serial0.1
```

5.1.3 **NCF -** If the result of either "**show ip ospf neighbor**" in Step 5.1.1 or Step 5.1.2 do not match the appropriate example , then something is wrong on either the WAN circuits or on the router. Work with the ESA to correct the problem.

5.1.4 **NCF -** Using the AS1 “rlogin” session from Stage 3, verify that switch modules 9, 10 and 14 were removed and that the remote switching function is operational.

as1-site:ncfuser:$ cu -l /dev/vir /* access VIR control module */

```
Connected
,☺,☺,☺,☺,☺,☺,☺,☺,☺,☺,☺

[Press the ‘enter’ key to display the menu]

ITM-24/35/53 SWITCH PATCH CONTROL SYSTEM Ver. 7.70 Copyright (c) VIR Inc. 1996

Command        Description
A   - Alarm/Switch Status Display, Enable, Disable
B   - A/B Switch Control
[output cut]...
ESC  - Redisplay this menu
H   - HELP with commands

< I00 > b                                /* NCF, press the ‘b’ key */
A/B Switch Sets
[output cut]...
.....
Current positions: (Any position marked with * is Patched, I is Interlocked.)
Line #:  01  02  03  04  05  06  07  08  09  10  11  12  13  14  15  16
          A   A  ...  A   A  ...  A  ... ... ... ... ... ... ... ... ...

< I00 > ~.                 /* get out of the VIR control module */
Closed connection.
```

5.1.5 **NCF -** Exit from all telnet and rlogin sessions and thank the ESA for the assistance.

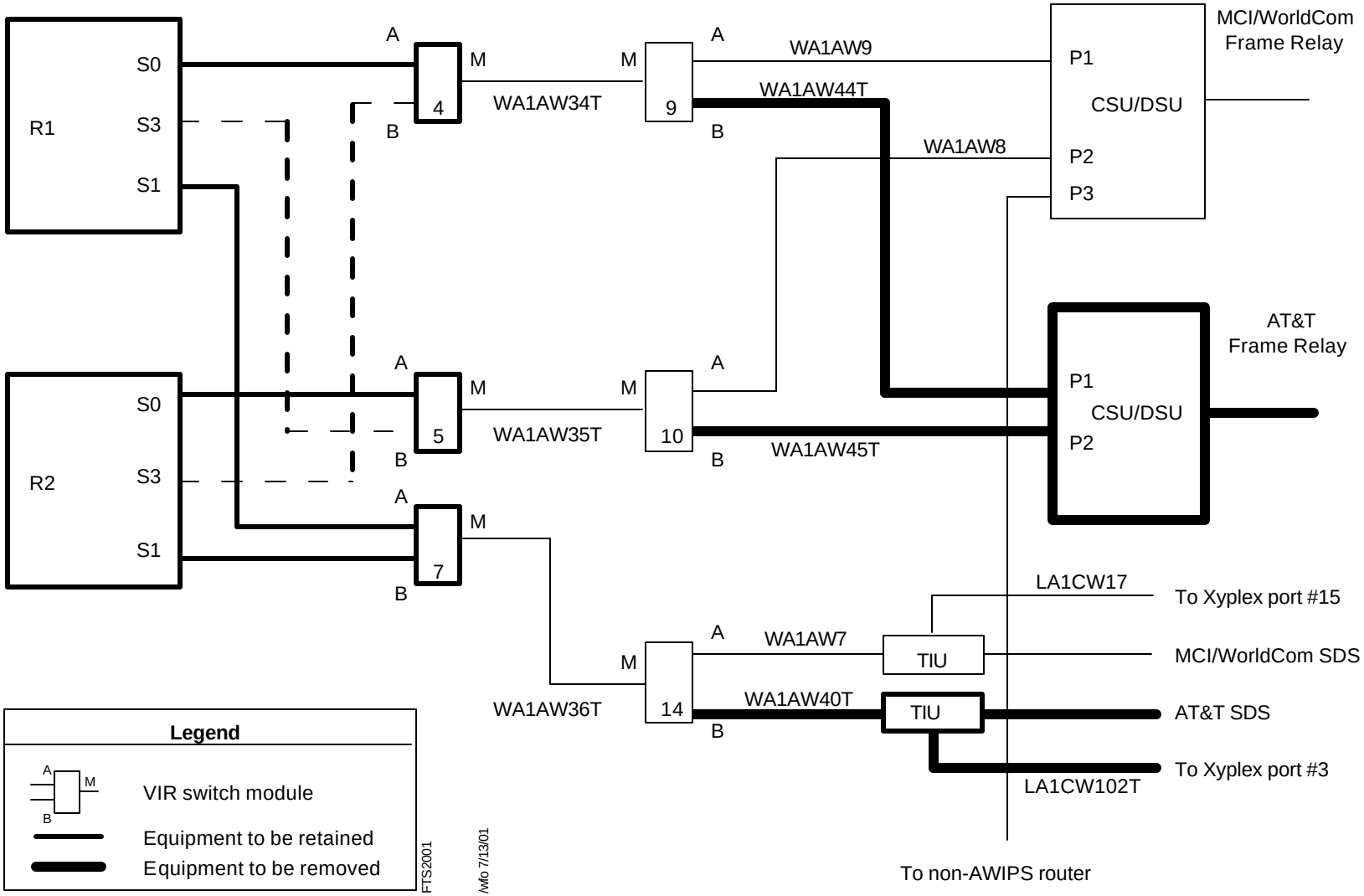

Exhibit 1. WFO to Frame Relay and SDS Transition Interface

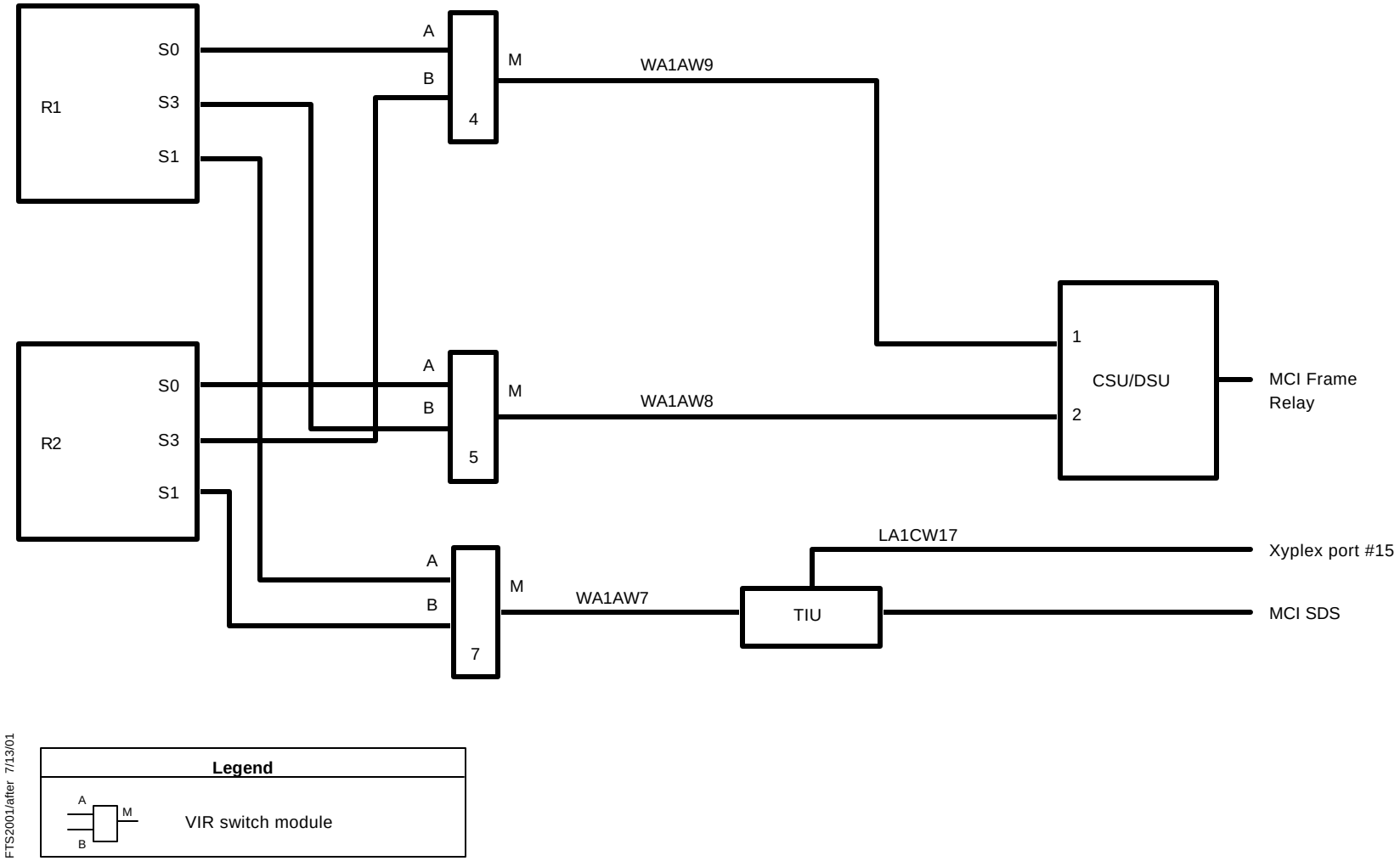

Exhibit 2. FTS2001 Frame Relay and SDS Interface after Transition Equipment Removal

ATTACHMENT C

AWIPS
. . . Advanced Weather Interactive Processing System

Operations and Maintenance Phase

De-installation Procedures for the FTS2001 Transition Equipment at the San Juan Weather Forecast Office (SJU)

16 July 2001

Contract No. 50-SPNA-3-00001
ECP-008

Doc. ID No. AWP.PRO.DEINS.ECP8.SJU-01.00

Prepared for
AWIPS Systems Acquisition Office
National Oceanic and Atmospheric Administration
U.S. Department of Commerce

This data, furnished in connection with Contract Number 50-SPNA-3-00001, shall not be duplicated, used, or disclosed outside the Government in whole or in part for any purpose other than to the extent provided in the contract. This restriction does not limit the Government's right to use information contained in the data if it is obtained from another source, to furnish data to the Government support contractors with whom PRC Inc. has signed a written nondisclosure agreement, or to comply with the provisions of the Freedom of Information Act.

1500 PRC Drive
McLean, Virginia 22102

De-installation Procedures for the FTS2001 Transition Equipment at the San Juan Weather Forecast Office (SJU)

Stage 0.0 Prepare for de-install

0.1 **ESA -** Telephone the NCF at (301) 713-3501 to notify them that you are ready to de-install the FTS2001 transition equipment.

0.2 **ESA -** Verify that all Switch Panel # 1's (VIR1) switch module are in the "A" position.

0.3 **NCF -** Establish a telnet session with router 1.

0.4 **ESA -** Verify SDS connectivity to the NCF from the Adtran front panel.

Note: If the Adtran is not displaying the main menu, as shown below, press the "**cancel**" key on the front panel to reach the main menu

```
1=STATUS       2=TEST
3=CONFIG       4=DIAL

Select option #4=Dial – press Enter

1= DIAL STORED #
2= ENTER DIAL #

Select option #2=Enter Dial # - press enter

Enter 7008990070 or 7008990069           /* NCF's Adtran #1 or #3 */
```

Display shows # being dialed and should display "**Data Mode - loop is normal**" when the connection is established.

0.5 **NCF -** Verify that the Adtran is connected to the NCF.

router1-sju> **show interface s1**

```
router1-sju> show interface s1

Serial1 is up, line protocol is down
 [output cut]...
 Description: SDS #1 interface, area backup
 [output cut]...
 DCD=up  DSR=up  DTR=up  RTS=up  CTS=up
```

0.6 **ESA -** Disconnect the SDS circuit.

Press the "#" key on the Adtran front panel key pad.
The LCD will show
1 = HANG UP
2 = STAY ON LINE
Press the "1" key and then the "ENTER" key on the Adtran front panel keypad.

0.7 **NCF -** Verify that the SDS connection is down.

```
router1-sju> show interface s1
Serial1 is down, line protocol is down
[output cut]...
description: SDS #1 interface, area backup
[output cut]...
CD=down DSR=up DTR=up  RTS=up  CTS=down
```

Stage 1.0 De-install the transition equipment associated with the Switched 56K circuit.

1.1 Relocate the SDS circuit cabling.

1.1.1 **ESA -** Remove the WA1AW36T cable between switch module 7 Modem port and switch module 14 Modem port.

1.1.2 **ESA -** Disconnect the WA1AW7 cable from switch module 14 Port A, re-label it with the new WA1AW7 labels and reconnect it to switch module 7 Modem port (The other end of this cable should stay connected to the Adtran CSU/DSU, V.35 port).

1.1.3 **NCF –** Rlogin to the site's AS1 server and establish a telnet session with Xyplex port 15 (the Adtran CSU/DSU control port).

```
as1-site:ncfuser:147$ telnet xyplex1 2000
Trying...
Connected to xyplex1.
Escape character is '^]'.

#access                                          /* enter access */

                         Welcome to AWIPS


Enter username> awips
Xyplex> c xyplex1:3500                           /* xyplex port# 15 */
Xyplex -010- Session 1 to XYPLEX1:3500 established
```

[Press the enter key several times to display the menu]

> **Note:** If you do not see the following menu, have the ESA check the cable between Xyplex port# 15 and the Adtran CSU/DSU control port (verifying the cable orientation is correct and the connectors are firmly seated) and the power on the Adtran CSU/DSU.

```
DSU IV ESP TERMINAL MENU

1 STATUS
2 LOCAL CONFIG
3 REMOTE CONFIG
4 LOCAL TEST
5 REMOTE TEST
6 DIAL SW56

-------------------------
-------------------------
ESC = EXIT          ENTER SELECTION ->

             Select 6            /* NCF, press '6' and then 'enter' key */

****  next screen is  *****************


DSU IV ESP DIALING MENU

1 DIAL STORED NUMBER
2 MANUAL DIAL ENTRY
```

```
              Select 2            /* NCF, press '2' and then 'enter' key */

****  next screen is  *****************

DSU IV ESP MANUAL DIALING

------------------------
------------------------
              ENTER NUMBER TO DIAL -> 7009980865  OR 7009980864
                                                     /* NCF Adtran #2 or #4 */
```

Note: If it shows remote busy, then try to dial the other 700 number. If the screen shows remote answered then proceed to the next step.

1.1.4 **NCF -** Verify that the Adtran is connected to the NCF.

```
router1-site> show interface s1

Serial1 is up, line protocol is down
 [output cut]...
 Description: SDS #1 interface, area backup
 [output cut]...
 DCD=up  DSR=up  DTR=up  RTS=up  CTS=up
```

1.1.5 **NCF -** Disconnect the SDS connection.

Enter "ESC" key to exit.	/* returns to Main Menu*/
Enter 6	/* 6 = Dial SW56 */
Enter 1 to hang up	/* 1 = Hang up line */
Enter "ESC" key to exit	
Enter ~ <cr>	

```
xyplex> set priv system
xyplex>> lo po 15
xyplex>> quit
```

1.1.6 **NCF -** Verify that the SDS connection is down.

```
router1-sju> show interface s1

Serial1 is down, line protocol is down
[output cut]...
description: SDS #1 interface, area backup
[output cut]...
CD=down DSR=up DTR=up  RTS=up  CTS=down
```

Stage 2.0 Complete the de-installation

2.1 Remove the excess cables and switch modules.

2.1.1 **ESA -** Remove the WA1AW40T cable between switch module 14 port B and the CM-1056 V.35 port.

2.1.2 **ESA -** Remove the V.35 adapter modules from the “A”, “B” and Modem connectors of switch module 14.

2.1.3 **ESA -** Disconnect the power to SwPnl 1.

2.1.4 **ESA -** Remove the V.35 switch module from SwPnl1 slot 14.

2.1.5 **ESA -** Reinstall the switch module blank panel, removed during installation, over SwPnl1 slot 14.

2.1.6 **ESA -** Reconnect the power to SwPnl 1.

2.1.7 **ESA -** Disconnect the M&C cable from the dial port of the CM-1056

2.1.8 **ESA -** At the Monitor and Control Terminal Server (Xyplex), disconnect cable LA1CW102T from port 3.

2.1.9 **ESA -** Remove the CM-1056 M&C cable from the system. This cable is of no further use, so it is up to each site’s discretion the method used to de-install the cable.

2.1.10 **ESA -** Notify the NCF that the de-install process is complete.

2.1.11 **NCF -** Using the AS1 “rlogin” session from Stage1, verify that switch module 14 was removed and that the remote switching function is operational.

as1-site:ncfuser:$ cu -l /dev/vir /* access VIR control module */

```
Connected
,☺,☺,☺,☺,☺,☺,☺,☺,☺,☺,☺

[Press the ‘enter’ key to display the menu]

ITM-24/35/53 SWITCH PATCH CONTROL SYSTEM Ver. 7.70 Copyright (c) VIR Inc. 1996

Command        Description
A   - Alarm/Switch Status Display, Enable, Disable
B   - A/B Switch Control
[output cut]...
ESC  - Redisplay this menu
H   - HELP with commands

< I00 > b                                /* NCF, press the ‘b’ key */
A/B Switch Sets
[output cut]...
.....
Current positions: (Any position marked with * is Patched, I is Interlocked.)
Line #:  01  02  03  04  05  06  07  08  09  10  11  12  13  14  15  16
          A   A  ...  A   A  ...  A  ... ... ... ... ... ... ... ... ...

< I00 > ~.                 /* get out of the VIR control module */
Closed connection.
```

2.1.12 **NCF -** Exit from all telnet and rlogin sessions and thank the ESA for the assistance.

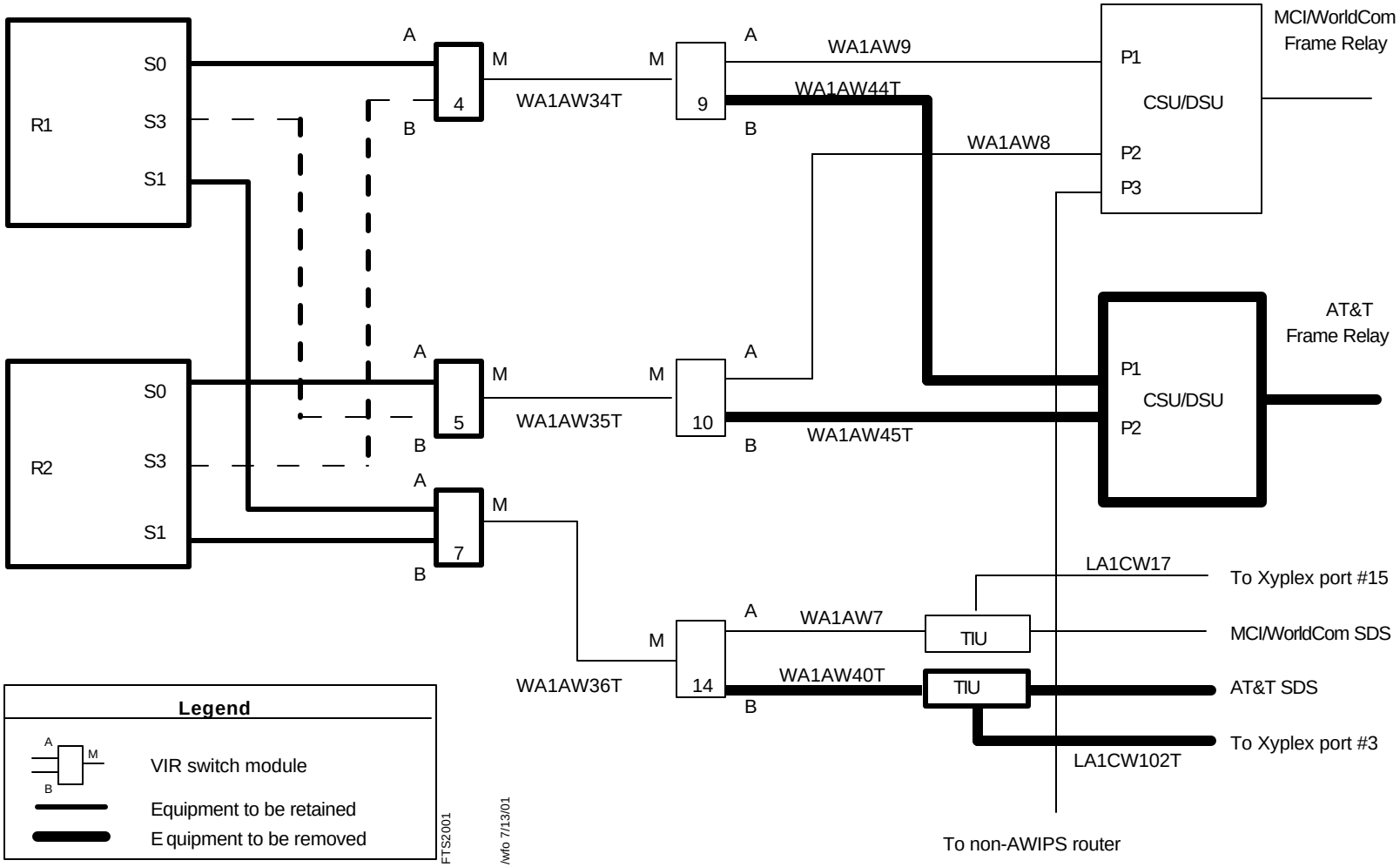

Exhibit 1. WFO to Frame Relay and SDS Transition Interface

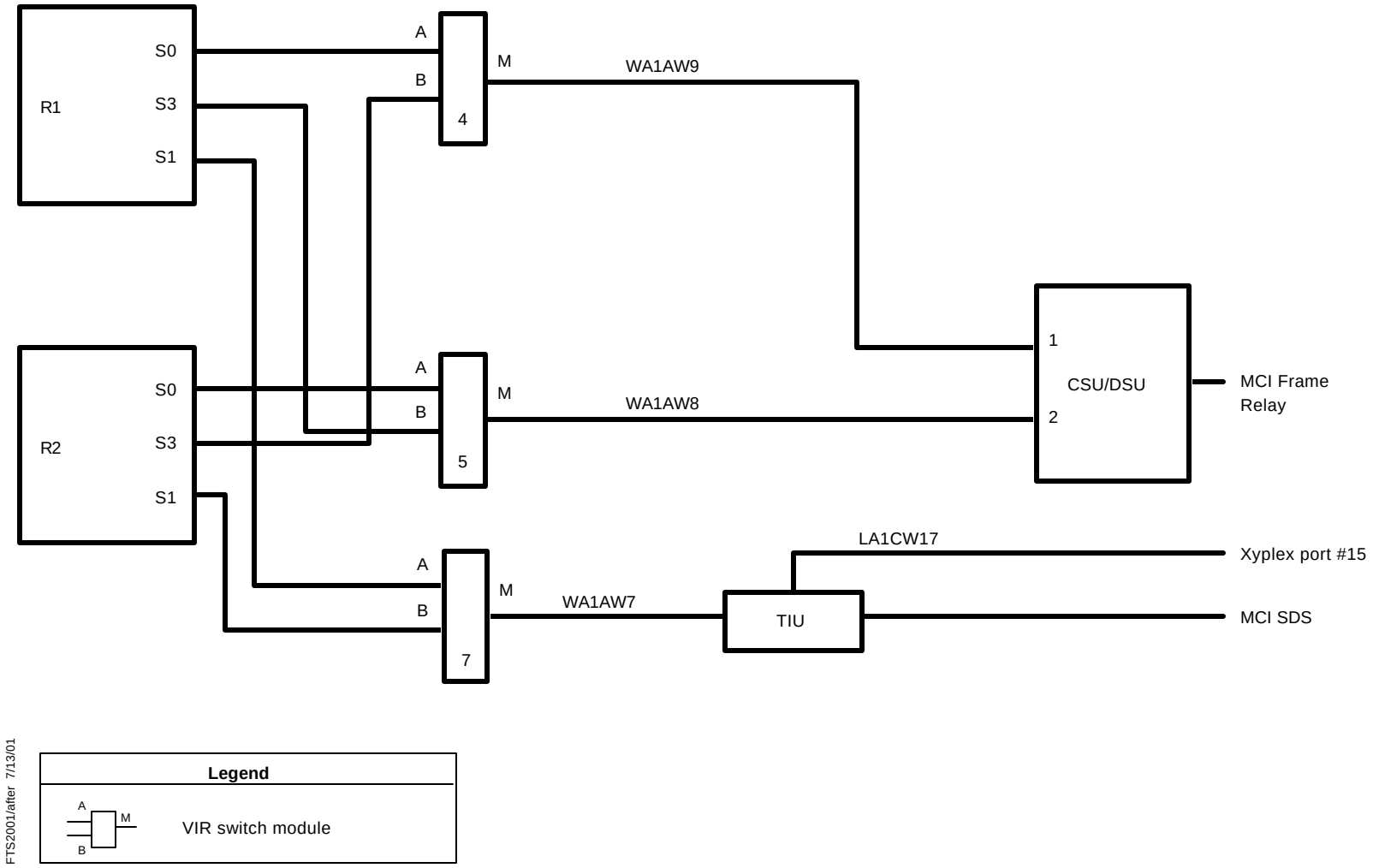

Exhibit 2. FTS2001 Frame Relay and SDS Interface after Transition Equipment Removal

ATTACHMENT D

AWIPS
. . . Advanced Weather Interactive Processing System

Operations and Maintenance Phase

De-installation Procedures for the FTS2001 Transition Equipment at the Alaska Weather Forecast Offices and Regional Headquarters

16 July 2001

Contract No. 50-SPNA-3-00001
ECP-008

Doc. ID No. AWP.PRO.DEINS.ECP8.AK-01.00

Prepared for
AWIPS System Acquisition Office
National Oceanic and Atmospheric Administration
U.S. Department of Commerce

This data, furnished in connection with Contract Number 50-SPNA-3-00001, shall not be duplicated, used, or disclosed outside the Government in whole or in part for any purpose other than to the extent provided in the contract. This restriction does not limit the Government's right to use information contained in the data if it is obtained from another source, to furnish data to the Government support contractors with whom PRC Inc. has signed a written nondisclosure agreement, or to comply with the provisions of the Freedom of Information Act.

1500 PRC Drive
McLean, Virginia 22102

De-installation Procedures for the FTS2001 Transition Equipment at the Alaska Weather Forecast Offices and Regional Headquarters

Stage 0.0 Prepare for De-install.

0.1 **ESA -** Telephone the NCF at (301) 713-3501 to notify them that you are ready to de-install the FTS2001 transition equipment.

0.2 **ESA -** Verify that all Switch Panel # 1's (VIR1) switch module are in the "A" position.

0.3 **NCF -** Establish a telnet session with router 1.

0.4 **NCF -** Verify that Frame Relay A is up.

router1-site> **show interface s0**

```
router1-site> show interface s0

Serial0 is up, line protocol is up
[output cut]...
Description: interface to EPSS port A
[output cut]...
DCD=up  DSR=up  DTR=up  RTS=up  CTS=up
```

0.5 **ESA -** Establish an SDS connection to ACR using the Adtran front panel.

> **Note:** If the Adtran is not displaying the main menu, as shown below, press the "**cancel**" key on the front panel to reach the main menu

```
1=STATUS       2=TEST
3=CONFIG       4=DIAL

Select option #4=Dial – press Enter

1= DIAL STORED #
2= ENTER DIAL #

Select option #2=Enter Dial # - press enter

Enter 7008993082 or 7008993084           /* ACR's Adtran #2 or #4 */
```

Display shows # being dialed and should display **"Data Mode - loop is normal"** when the connection is established.

0.6 **NCF -** Verify that the Adtran is connected to ACR.

```
router1-site> show interface s1

Serial1 is up, line protocol is up
 [output cut]...
 Description: SDS #1 interface, area backup
 [output cut]...
 DCD=up  DSR=up  DTR=up  RTS=up  CTS=up
```

Stage 1.0 De-install the transition equipment associated with the Frame Relay "A" circuit.

1.1 This stage will break the Frame Relay Port A connection to the WAN.

1.1.1 **NCF -** Continue to monitor router 1's serial 1 interface while the ESA completes Step 1.1.2 and Step 1.1.3.

1.1.2 **ESA -** Remove the WA1AW34T cable between switch module 4 Modem port and switch module 9 Modem port.

1.1.3 **ESA -** Disconnect the WA1AW9 cable from switch module 9 Port A, re-label it with the new WA1AW9 labels and reconnect it to switch module 4 Modem port (The other end of this cable should stay connected to the Larscom CSU/DSU, port 1).

1.1.4 **NCF -** Verify that Frame Relay A is back up.

router1-site> **show interface s0**

```
router1-site> show interface s0

Serial0 is up, line protocol is up
[output cut]...
Description: interface to EPSS port A
[output cut]...
DCD=up  DSR=up  DTR=up  RTS=up  CTS=up
```

Note: If you do not see the correct status of the serial 0 interface, have the ESA verify that the proper cables have been moved and that the WA1AW9 cable is connected to the correct port on the Switch Panel.

1.2 Disconnect the SDS circuit and verify that the frame relay circuit reestablishes.

1.2.1 **ESA -** Disconnect the SDS circuit.

Press the "#" key on the Adtran front panel key pad.
The LCD will show
1 = HANG UP
2 = STAY ON LINE
Press the "1" key and then the "ENTER" key on the Adtran front panel keypad.

1.2.2 **NCF -** Verify that the SDS connection is down.

```
router1-site> show interface s1

Serial1 is down, line protocol is down
[output cut]...
description: SDS #1 interface, area backup
[output cut]...
CD=down DSR=up DTR=up  RTS=up  CTS=down
```

1.2.3 **NCF -** Allow approximately 5-minutes for the routing table to converge and issue the "**show ip ospf neighbor**" command to verify that the frame relay circuit has been restored.

router1-site> **show ip ospf neighbor**

The result of the "**show ip ospf neighbor**" command should be similar to the following example (where the ip address to the left of *Serial0.1* is the ip address of ACR):

```
router1-afg> show ip ospf neighbor

Neighbor ID     Pri   State           Dead Time   Address         Interface
1.5.9.21          1   FULL/BDR        00:00:39    165.92.147.72   Ethernet0
1.5.9.21          1   FULL/DR         00:00:39    165.92.147.202  Ethernet1
205.156.59.201    1   FULL/  -        00:01:55    165.92.153.131  Serial0.1
```

Stage 2.0 De-install the transition equipment associated with the Switched 56K circuit.

2.1 Relocate the SDS circuit cabling.

2.1.1 **ESA -** Remove the WA1AW36T cable between switch module 7 Modem port and switch module 14 Modem port.

2.1.2 **ESA -** Disconnect the WA1AW7 cable from switch module 14 Port A, re-label it with the new WA1AW7 labels and reconnect it to switch module 7 Modem port (The other end of this cable should stay connected to the Adtran CSU/DSU, V.35 port).

2.1.3 **NCF –** Rlogin to the site's AS1 server and establish a telnet session with Xyplex port 15 (the Adtran CSU/DSU control port).

```
as1-site:ncfuser:147$ telnet xyplex1 2000
Trying...
Connected to xyplex1.
Escape character is '^]'.

#access                                          /* enter access */
                          Welcome to AWIPS


Enter username> awips
Xyplex> c xyplex1:3500                           /* xyplex port# 15 */
Xyplex -010- Session 1 to XYPLEX1:3500 established

[Press the enter key several times to display the menu]
```

Note: If you do not see the following menu, have the ESA check the cable between Xyplex port# 15 and the Adtran CSU/DSU control port (verifying the cable orientation is correct and the connectors are firmly seated) and the power on the Adtran CSU/DSU.

```
DSU IV ESP TERMINAL MENU

1 STATUS
2 LOCAL CONFIG
3 REMOTE CONFIG
4 LOCAL TEST
5 REMOTE TEST
6 DIAL SW56
```

```
-------------------------
-------------------------
ESC = EXIT          ENTER SELECTION ->

             Select 6            /* NCF, press '6' and then 'enter' key */

****  next screen is  ******************


DSU IV ESP DIALING MENU

1 DIAL STORED NUMBER
2 MANUAL DIAL ENTRY

             Select 2            /* NCF, press '2' and then 'enter' key */

****  next screen is  ******************

DSU IV ESP MANUAL DIALING

------------------------
------------------------
             ENTER NUMBER TO DIAL -> 7009980865  OR 7009980864
                                                     /* NCF Adtran #2 or #4 */
```

Note: If it shows remote busy, then try to dial the other 700 number. If the screen shows remote answered then proceed to the next step.

2.1.4 **NCF -** Verify that the Adtran is connected to the NCF.

```
router1-site> show interface s1

Serial1 is up, line protocol is down
 [output cut]...
 Description: SDS #1 interface, area backup
 [output cut]...
 DCD=up  DSR=up  DTR=up  RTS=up  CTS=up
```

2.1.5 **NCF -** Disconnect the SDS connection.

Enter "ESC" key to exit.	/* returns to Main Menu*/
Enter 6	/* 6 = Dial SW56 */
Enter 1 to hang up	/* 1 = Hang up line */
Enter "ESC" key to exit	
Enter ~ <cr>	

```
xyplex> set priv system
xyplex>> lo po 15
xyplex>> quit
```

2.1.6 **NCF -** Verify that the SDS connection is down.

```
router1-site> show interface s1

Serial1 is down, line protocol is down
[output cut]...
description: SDS #1 interface, area backup
[output cut]...
CD=down DSR=up DTR=up  RTS=up  CTS=down
```

Stage 3.0 Complete the de-installation

3.1 Remove the excess cables and switch modules.

3.1.1 **ESA -** Remove the WA1AW44T cable between switch module 9 port B and the Paradyne CSU/DSU port 1.

3.1.2 **ESA -** Remove the WA1AW40T cable between switch module 14 port B and the CM-1056 V.35 port.

3.1.3 **ESA -** Remove the V.35 adapter modules from the "A", "B" and Modem connectors of switch module 14.

3.1.4 **ESA -** Disconnect the power to SwPnl 1.

3.1.5 **ESA -** Remove the RS-530 switch module from SwPnl1 slot 9. Retain this module for possible future use.

3.1.6 **ESA -** Remove the V.35 switch module from SwPnl1 slot 14.

3.1.7 **ESA -** Reinstall the switch module blank panels, removed during installation, over SwPnl1 slots 9 and 14.

3.1.8 **ESA -** Reconnect the power to SwPnl 1.

3.1.9 **ESA -** Disconnect the M&C cable from the dial port of the CM-1056

3.1.10 **ESA -** At the Monitor and Control Terminal Server (Xyplex), disconnect cable LA1CW102T from port 3.

3.1.11 **ESA -** Remove the CM-1056 M&C cable from the system. This cable is of no further use, so it is up to each site's discretion the method used to de-install the cable.

3.1.12 **ESA -** Notify the NCF that the de-install process is complete.

Stage 4.0 Verify that the site's WAN connectivity has been fully restored.

4.1 Determine the status of the Permanent Virtual Circuit (PVC) to ACR.

4.1.1 **NCF -** Verify connectivity to ACR;

router1-site> **show ip ospf neighbor**

As in Stage 1.0, the result of the "**show ip ospf neighbor**" command should be similar to the following example (where the ip address to the left of *Serial0.1* is the ip address of ACR):

```
router1-afg> show ip ospf neighbor

Neighbor ID     Pri   State           Dead Time   Address         Interface
1.5.9.21          1   FULL/BDR        00:00:39    165.92.147.72   Ethernet0
1.5.9.21          1   FULL/DR         00:00:39    165.92.147.202  Ethernet1
205.156.59.201    1   FULL/  -        00:01:55    165.92.153.131  Serial0.1
```

4.1.2 **NCF -** If the result of the "**show ip ospf neighbor**" in Step 4.1.1 does not match the example, then something is wrong with the WAN circuits or the router. Work with the ESA to correct the problem.

4.1.3 **NCF -** Using the AS1 “rlogin” session from Stage 2, verify that switch modules 9 and 14 were removed and that the remote switching function is operational.

as1-site:ncfuser:$ cu -l /dev/vir /* access VIR control module */

```
Connected
,☺,☺,☺,☺,☺,☺,☺,☺,☺,☺,☺

[Press the ‘enter’ key to display the menu]

ITM-24/35/53 SWITCH PATCH CONTROL SYSTEM Ver. 7.70 Copyright (c) VIR Inc. 1996

Command        Description
A   - Alarm/Switch Status Display, Enable, Disable
B   - A/B Switch Control
[output cut]...
ESC  - Redisplay this menu
H   - HELP with commands

< I00 > b                                /* NCF, press the ‘b’ key */
A/B Switch Sets
[output cut]...
.....
Current positions: (Any position marked with * is Patched, I is Interlocked.)
Line #:  01  02  03  04  05  06  07  08  09  10  11  12  13  14  15  16
          A   A  ...  A   A  ...  A  ... ... ... ... ... ... ... ... ...

< I00 > ~.                 /* get out of the VIR control module */
Closed connection.
```

4.1.4 **NCF -** Exit from all telnet and rlogin sessions and thank the ESA for the assistance.

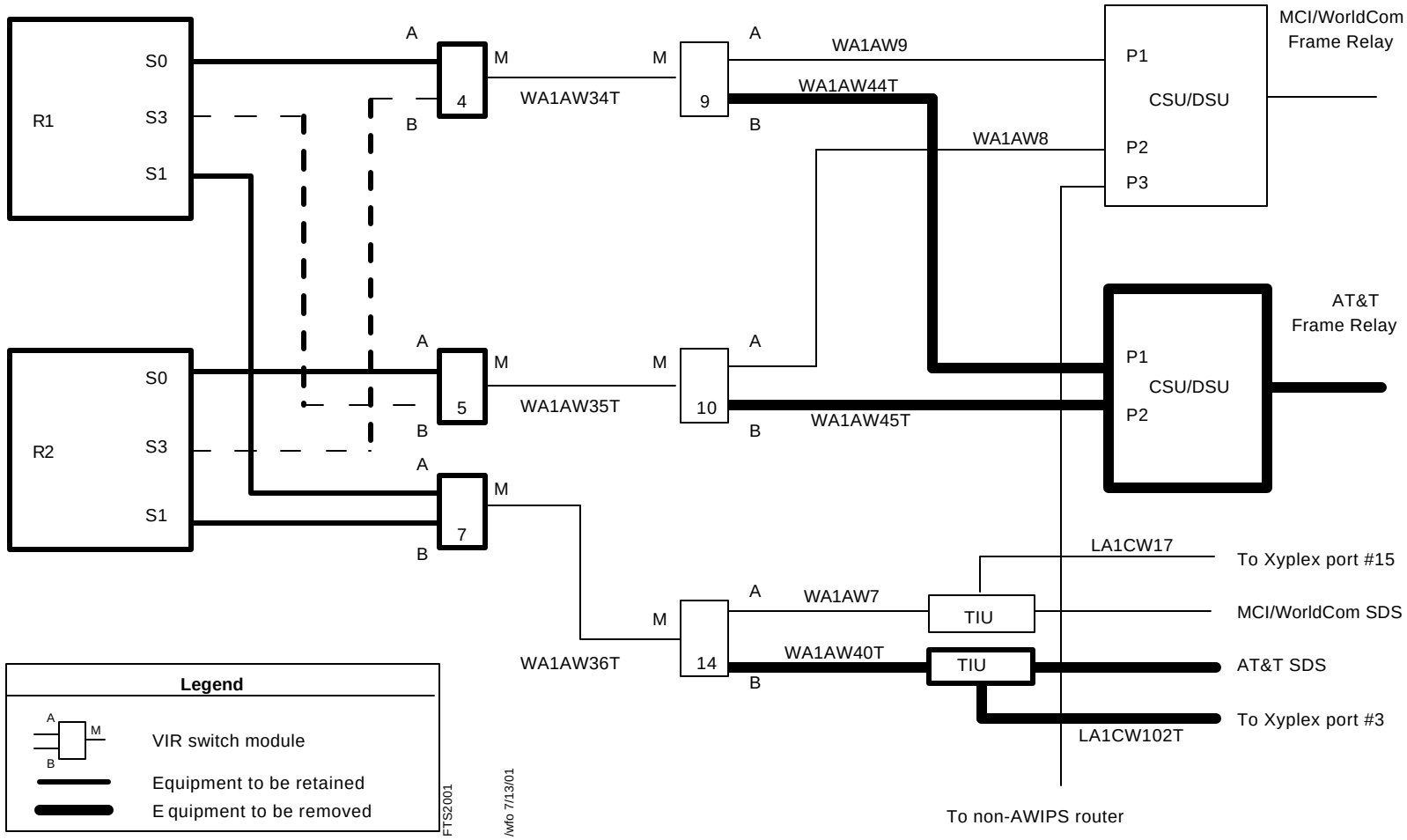

Exhibit 1. WFO to Frame Relay and SDS Transition Interface

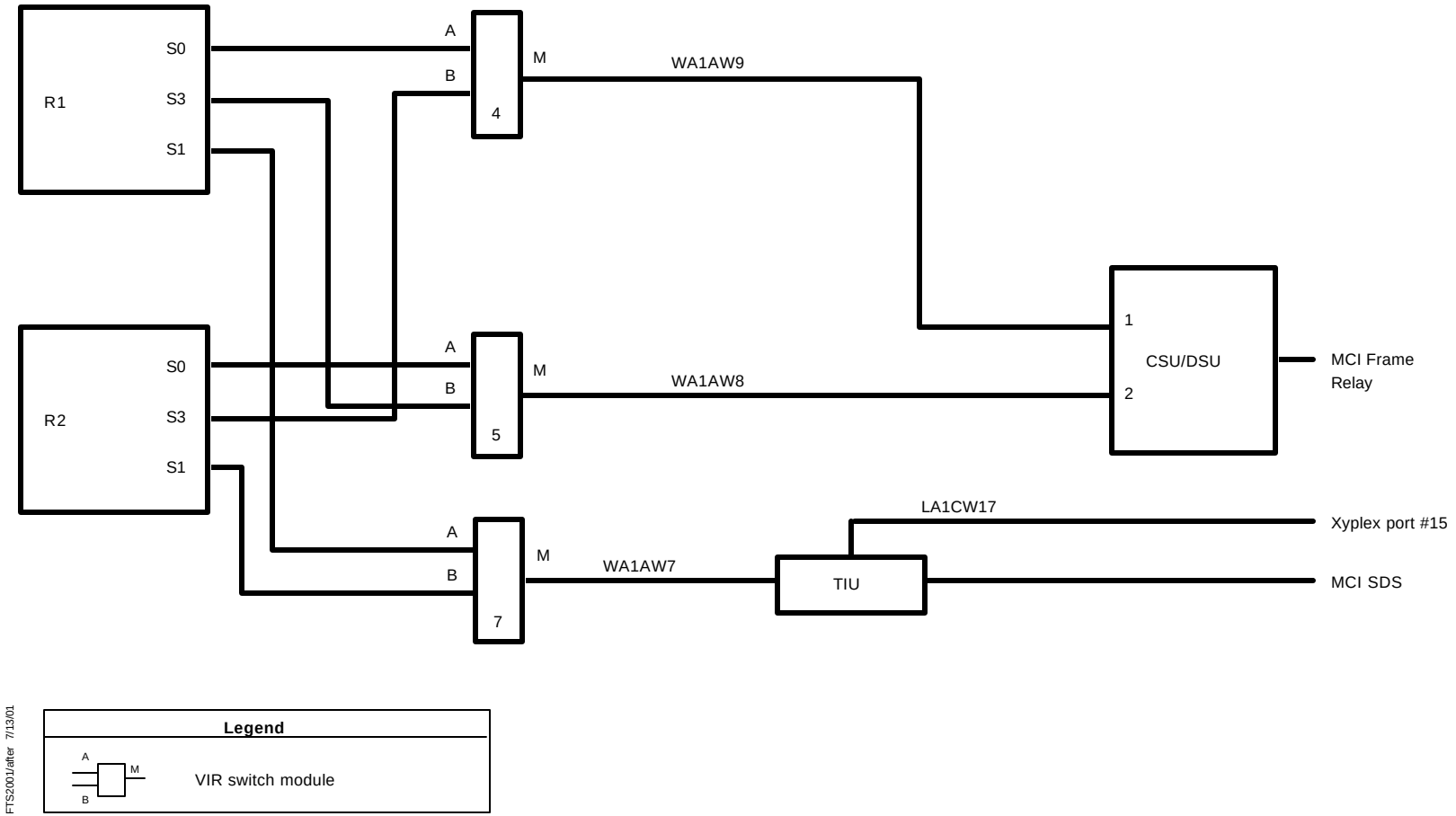

Exhibit 2. FTS2001 Frame Relay and SDS Interface after Transition Equipment Removal

ATTACHMENT E

AWIPS
. . . Advanced Weather Interactive Processing System

Operations and Maintenance Phase

De-installation Procedures for the FTS2001 Transition Equipment at the Guam Weather Forecast Office (GUM)

16 July 2001

Contract No. 50-SPNA-3-00001
ECP-008

Doc. ID No. AWP.PRO.DEINS.ECP8.GUM-01.00

Prepared for
AWIPS Systems Acquisition Office
National Oceanic and Atmospheric Administration
U.S. Department of Commerce

This data, furnished in connection with Contract Number 50-SPNA-3-00001, shall not be duplicated, used, or disclosed outside the Government in whole or in part for any purpose other than to the extent provided in the contract. This restriction does not limit the Government's right to use information contained in the data if it is obtained from another source, to furnish data to the Government support contractors with whom PRC Inc. has signed a written nondisclosure agreement, or to comply with the provisions of the Freedom of Information Act.

1500 PRC Drive
McLean, Virginia 22102

De-installation Procedures for the FTS2001 Transition Equipment at the Guam Weather Forecast Office (GUM)

Stage 0.0 Prepare for De-install.

0.1 **ESA -** Telephone the NCF at (301) 713-3501 to notify them that you are ready to de-install the FTS2001 transition equipment.

0.2 **ESA -** Verify that all Switch Panel # 1's (VIR1) switch module are in the "A" position.

0.3 **NCF -** Establish a telnet session with the site's routers.

0.4 **ESA -** Verify SDS connectivity to the NCF using the Adtran front panel.

> **Note:** If the Adtran is not displaying the main menu, as shown below, press the "**cancel**" key on the front panel to reach the main menu

```
1=STATUS       2=TEST
3=CONFIG       4=DIAL

Select option #4=Dial – press Enter

1= DIAL STORED #
2= ENTER DIAL #

Select option #2=Enter Dial # - press enter

Enter 7008990070 or 7008990069           /* NCF's Adtran #1 or #3 */
```

Display shows # being dialed and should display "**Data Mode - loop is normal**" when the connection is established.

0.5 **NCF -** Verify that the Adtran is connected to the NCF.

router1-gum> **show interface s1**

```
router1-gum> show interface s1

Serial1 is up, line protocol is down
[output cut]...
Description: SDS #1 interface, area backup
[output cut]...
DCD=up  DSR=up  DTR=up  RTS=up  CTS=up
```

0.6 **ESA -** Disconnect the SDS circuit.

Press the "#" key on the Adtran front panel key pad.
The LCD will show
1 = HANG UP
2 = STAY ON LINE
Press the "1" key and then the "ENTER" key on the Adtran front panel keypad.

0.7 **NCF -** Verify that the SDS connection is down.

```
router1-site> show interface s1

Serial1 is down, line protocol is down
[output cut]...
description: SDS #1 interface, area backup
[output cut]...
CD=down DSR=up DTR=up  RTS=up  CTS=down
```

0.8 **NCF -** Verify the site's WAN access status.

Using the telnet session with router 2, verify the DTS FT1 circuit to HFO.

router2-gum> **show ip ospf neighbor**

The result of the "**show ip ospf neighbor**" command should be similar to the following example:

```
router2-gum> show ip ospf neighbor

Neighbor ID     Pri   State           Dead Time   Address         Interface
1.5.10.89         1   FULL/BDR        00:00:37    165.92.172.71   Ethernet0
1.5.10.89         1   FULL/BDR        00:00:37    165.92.172.201  Ethernet1
1.5.10.77         1   FULL/  -        00:01:42    205.156.58.165  Serial0
```

Using the telnet session with router 1, verify the DTS T1 circuit to PTWC

router1-gum> **show ip ospf neighbor**

The result of the "**show ip ospf neighbor**" command should be similar to the following example:

```
router1-gum> show ip ospf neighbor

Neighbor ID     Pri   State           Dead Time   Address         Interface
1.5.10.93         1   FULL/DR         00:00:36    165.92.172.72   Ethernet0
1.5.10.93         1   FULL/DR         00:00:36    165.92.172.202  Ethernet1
1.5.10.97         1   FULL/  -        00:01:48    205.156.58.229  Serial0
```

Stage 1.0 De-install the transition equipment associated with the DTS FT1 circuit to HFO.

1.1 This stage will break the DTS FT1 connection to HFO.

1.1.1 **NCF -** Verify that the DTS connection to the satellite downlink site is up.

router1-gum> **show interface s0**

```
router1-gum> show interface s0

Serial0 is up, line protocol is up
[output cut]...
Description: DTS T1 to Tsunami Warning Center RFC port A
[output cut]...
DCD=up  DSR=up  DTR=up  RTS=up  CTS=up
```

1.1.2 **NCF -** Continue to monitor router 1's serial 0 interface while the ESA completes Step 1.1.3 and Step 1.1.4.

1.1.3 **ESA -** Remove the WA1AW35T cable between switch module 5 Modem port and switch module 10 Modem port.

1.1.4 **ESA -** Disconnect the WA1AW8 cable from switch module 10 Port A, re-label it with the new WA1AW8 labels and reconnect it to switch module 5 Modem port (The other end of this cable should stay connected to the Larscom CSU/DSU #2).

1.1.5 **NCF -** Verify that the DTS FT1 circuit to HFO is back up.

router2-gum> **show interface s0**

```
router2-gum> show interface s0

Serial0 is up, line protocol is up
[output cut]...
Description: DTS 128K to Honolulu, HI HFO WFO
[output cut]...
DCD=up  DSR=up  DTR=up  RTS=up  CTS=up
```

Note: If you do not see the correct status of router 2's serial 0 interface, have the ESA verify that the proper cables were moved and that the WA1AW8 cable is connected to the correct port on the Switch Panel.

Stage 2.0 De-install the transition equipment associated with the DTS T1 circuit to PTWC.

2.1 This stage will break the DTS connection to the satellite downlink site.

2.1.1 **NCF -** Verify that the DTS FT1 circuit to HFO is still up.

router2-gum> **show interface s0**

```
router2-gum> show interface s0

Serial0 is up, line protocol is up
[output cut]...
Description: DTS 128K to Honolulu, HI HFO WFO
[output cut]...
DCD=up  DSR=up  DTR=up  RTS=up  CTS=up
```

2.1.2 **NCF -** Continue to monitor router 2's serial 0 interface while the ESA completes Step 2.1.3 and Step 2.1.4.

2.1.3 **ESA -** Remove the WA1AW34T cable between switch module 4 Modem port and switch module 9 Modem port.

2.1.4 **ESA -** Disconnect the WA1AW9 cable from switch module 9 Port A, re-label it with the new WA1AW9 labels and reconnect it to switch module 4 Modem port (The other end of this cable should stay connected to the Larscom CSU/DSU #1).

2.1.5 **NCF -** Verify that the DTS connection to the satellite downlink site is back up.

router1-gum> **show interface s0**

```
router1-gum> show interface s0

Serial0 is up, line protocol is up
[output cut]...
Description: DTS T1 to Tsunami Warning Center RFC port A
[output cut]...
DCD=up  DSR=up  DTR=up  RTS=up  CTS=up
```

Note: If you do not see the correct status of router 1's serial 0 interface, have the ESA verify that the proper cables were moved and that the WA1AW9 cable is connected to the correct port on the Switch Panel..

Stage 3.0 De-install the transition equipment associated with the Switched 56K circuit.

3.1 Relocate the SDS circuit cabling.

3.1.1 **ESA -** Remove the WA1AW36T cable between switch module 7 Modem port and switch module 14 Modem port.

3.1.2 **ESA -** Disconnect the WA1AW7 cable from switch module 14 Port A, re-label it with the new WA1AW7 labels and reconnect it to switch module 7 Modem port (The other end of this cable should stay connected to the Adtran CSU/DSU, V.35 port).

3.1.3 **NCF –** Rlogin to the site's AS1 server and establish a telnet session with Xyplex port 15 (the Adtran CSU/DSU control port).

```
as1-site:ncfuser:147$ telnet xyplex1 2000
Trying...
Connected to xyplex1.
Escape character is '^]'.


#access                                    /* enter access */

                         Welcome to AWIPS


Enter username> awips
Xyplex> c xyplex1:3500                     /* xyplex port# 15 */
Xyplex -010- Session 1 to XYPLEX1:3500 established

[Press the enter key several times to display the menu]
```

Note: If you do not see the following menu, have the ESA check the cable between Xyplex port# 15 and the Adtran CSU/DSU control port (verifying the cable orientation is correct and the connectors are firmly seated) and the power on the Adtran CSU/DSU.

```
DSU IV ESP TERMINAL MENU

1 STATUS
2 LOCAL CONFIG
3 REMOTE CONFIG
4 LOCAL TEST
5 REMOTE TEST
6 DIAL SW56

-------------------------
-------------------------
ESC = EXIT          ENTER SELECTION ->

             Select 6            /* NCF, press '6' and then 'enter' key */

****  next screen is  ******************


DSU IV ESP DIALING MENU

1 DIAL STORED NUMBER
2 MANUAL DIAL ENTRY
```

```
                Select 2            /* NCF, press '2' and then 'enter' key */

****  next screen is  *****************

DSU IV ESP MANUAL DIALING

------------------------
------------------------
                ENTER NUMBER TO DIAL -> 7009980865  OR 7009980864
                                                  /* NCF Adtran #2 or #4 */
```

Note: If it shows remote busy, then try to dial the other 700 number. If the screen shows remote answered then proceed to the next step.

3.1.4 **NCF -** Verify that the Adtran is connected to the NCF.

```
router1-site> show interface s1

Serial1 is up, line protocol is down
 [output cut]...
 Description: SDS #1 interface, area backup
 [output cut]...
 DCD=up  DSR=up  DTR=up  RTS=up  CTS=up
```

3.1.5 **NCF -** Disconnect the SDS connection.

Enter "ESC" key to exit.	/* returns to Main Menu*/
Enter 6	/* 6 = Dial SW56 */
Enter 1 to hang up	/* 1 = Hang up line */
Enter "ESC" key to exit	
Enter ~ <cr>	

```
xyplex> set priv system
xyplex>> lo po 15
xyplex>> quit
```

3.1.6 **NCF -** Verify that the SDS connection is down.

```
router1-gum> show interface s1

Serial1 is down, line protocol is down
[output cut]...
description: SDS #1 interface, area backup
[output cut]...
CD=down DSR=up DTR=up  RTS=up  CTS=down
```

Stage 4.0 Complete the de-installation

4.1 Remove the excess cables and switch modules.

4.1.1 **ESA -** Remove the WA1AW44T cable between switch module 9 port B and the Paradyne CSU/DSU #1.

4.1.2 **ESA -** Remove the WA1AW45T cable between switch module 10 port B and the Paradyne CSU/DSU #2.

4.1.3 **ESA -** Remove the WA1AW40T cable between switch module 14 port B and the CM-1056 V.35 port.

4.1.4 **ESA -** Remove the V.35 adapter modules from the “A”, “B” and Modem connectors of switch module 14.

4.1.5 **ESA -** Disconnect the power to SwPnl 1.

4.1.6 **ESA -** Remove the RS-530 switch modules from SwPnl1 slots 9 and 10. Retain these module for possible future use.

4.1.7 **ESA -** Remove the V.35 switch module from SwPnl1 slot 14.

4.1.8 **ESA -** Reinstall the switch module blank panels, removed during installation, over SwPnl1 slots 9, 10 and 14.

4.1.9 **ESA -** Reconnect the power to SwPnl 1.

4.1.10 **ESA -** Disconnect the M&C cable from the dial port of the CM-1056

4.1.11 **ESA -** At the Monitor and Control Terminal Server (Xyplex), disconnect cable LA1CW102T from port 3.

4.1.12 **ESA -** Remove the CM-1056 M&C cable from the system. This cable is of no further use, so it is up to each site's discretion the method used to de-install the cable.

4.1.13 **ESA -** Notify the NCF that the de-install process is complete.

Stage 5.0 Verify that the site's connectivity has been fully restored.

5.1 Determine the status of the DTS circuits to Hawaii.

5.1.1 **NCF -** Verify connectivity to the satellite downlink site.

router1-gum> **show ip ospf neighbor**

The result of the "**show ip ospf neighbor**" command should be similar to the following example.

```
router1-gum> show ip ospf neighbor

Neighbor ID     Pri   State           Dead Time   Address         Interface
1.5.10.93         1   FULL/DR         00:00:36    165.92.172.72   Ethernet0
1.5.10.93         1   FULL/DR         00:00:36    165.92.172.202  Ethernet1
1.5.10.97         1   FULL/  -        00:01:48    205.156.58.229  Serial0
```

5.1.2 **NCF -** Verify connectivity to HFO.

router2-gum> **show ip ospf neighbor**

As above, the result of the "**show ip ospf neighbor**" command should be similar to the following example.

```
router2-gum> show ip ospf neighbor

Neighbor ID     Pri   State           Dead Time   Address         Interface
1.5.10.89         1   FULL/BDR        00:00:37    165.92.172.71   Ethernet0
1.5.10.89         1   FULL/BDR        00:00:37    165.92.172.201  Ethernet1
1.5.10.77         1   FULL/  -        00:01:42    205.156.58.165  Serial0
```

5.1.3 **NCF -** If the result of either "**show ip ospf neighbor**" in Step 5.1.1 or Step 5.1.2 do not match the appropriate example , then something is wrong on either one of the circuits or the router. Work with the ESA to correct the problem.

5.1.4 **NCF -** Using the AS1 "rlogin" session from Stage 3, verify that switch modules 9, 10 and 14 were removed and that the remote switching function is operational.

as1-site:ncfuser:$ cu -l /dev/vir /* access VIR control module */

```
Connected
☺☺☺☺☺☺☺☺☺☺☺☺

[Press the 'enter' key to display the menu]

ITM-24/35/53 SWITCH PATCH CONTROL SYSTEM Ver. 7.70 Copyright (c) VIR Inc. 1996

Command        Description
A   - Alarm/Switch Status Display, Enable, Disable
B   - A/B Switch Control
[output cut]...
ESC  - Redisplay this menu
H   - HELP with commands

< I00 > b                                /* NCF, press the 'b' key */
A/B Switch Sets
[output cut]...
.....
Current positions: (Any position marked with * is Patched, I is Interlocked.)
Line #:  01  02  03  04  05  06  07  08  09  10  11  12  13  14  15  16
          A   A  ...  A   A  ...  A  ... ... ... ... ... ... ... ... ...

< I00 > ~.                  /* get out of the VIR control module */
Closed connection.
```

5.1.5 **NCF -** Exit from all telnet and rlogin sessions and thank the ESA for the assistance.

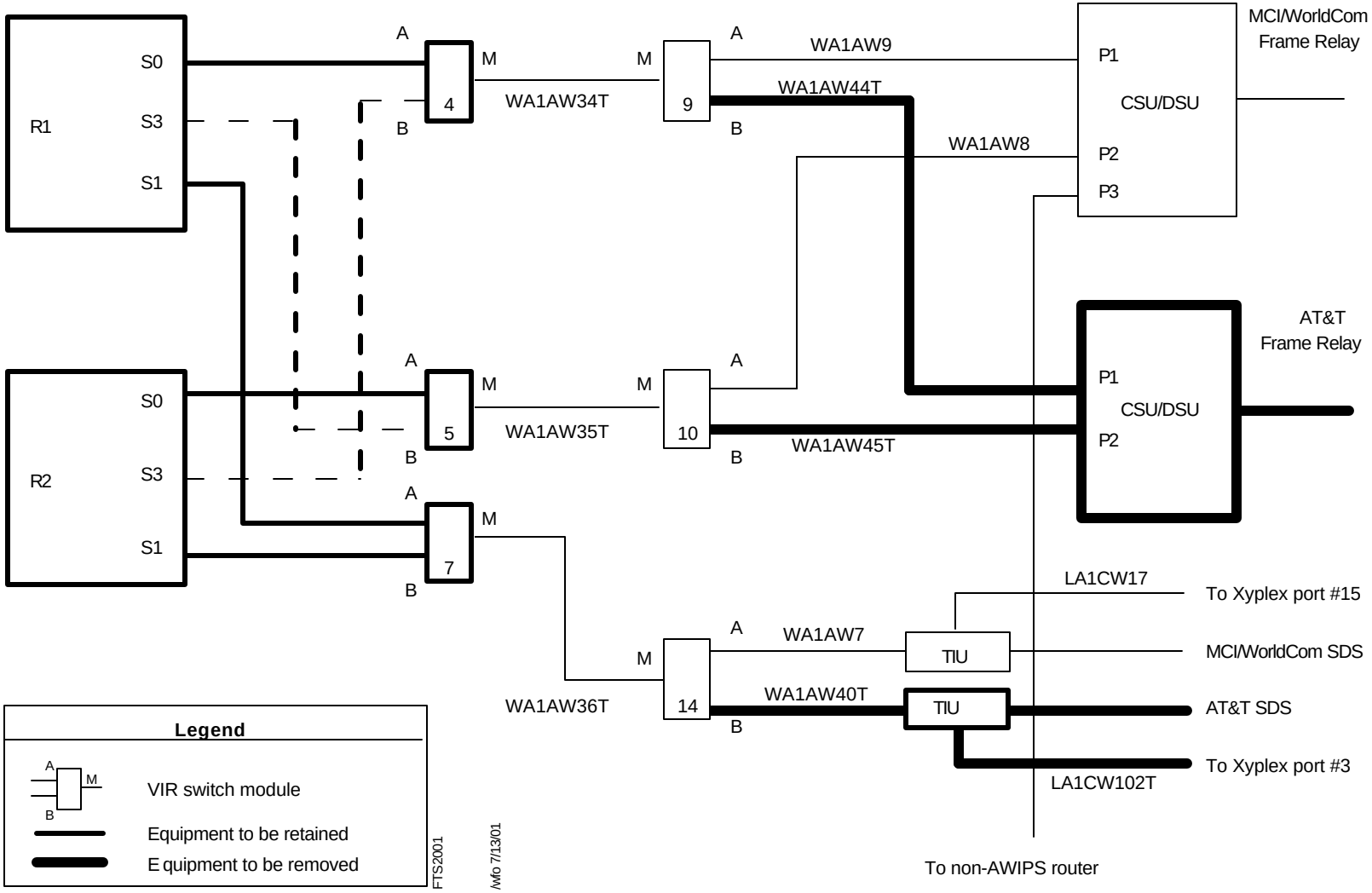

Exhibit 1. WFO to Frame Relay and SDS Transition Interface

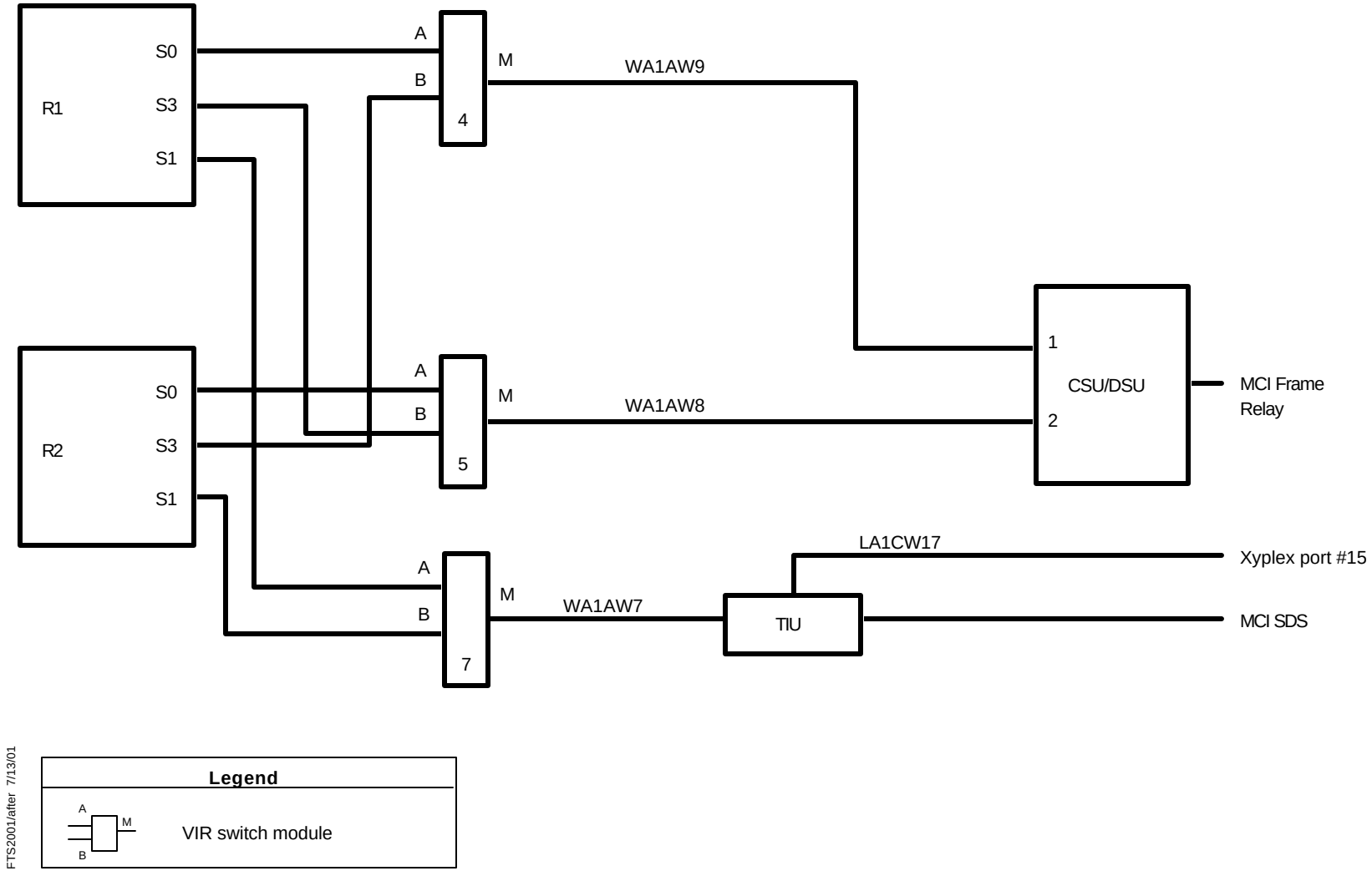

FTS2001/after 7/13/01

Exhibit 2. FTS2001 Frame Relay and SDS Interface after Transition Equipment Removal