CHAPTER 11

FREEZING RAIN SENSOR

SECTION I. DESCRIPTION AND LEADING PARAMETERS

11.1.1 INTRODUCTION

The ASOS freezing rain sensor is manufactured by Rosemount Aerospace, Inc. of Burnsville, Minnesota, uses an ultrasonically vibrating probe to detect the presence of icing conditions. The vibrating frequency of the probe decreases with the accumulation of ice. The sensor communicates with the data collection package (DCP) via a fiberoptic serial data link. The DCP polls the sensor for status once every 60 seconds, and the sensor responds with the current operating frequency of its probe. The DCP, in turn, passes the frequency data to the acquisition control unit (ACU). When the ACU receives a frequency from the freezing rain sensor indicating ice formation, the ACU confirms that the present weather sensor (also known as a light emitting diode weather indicator (LEDWI)) is indicating precipitation. The indications from these two sensors confirm ice formation on the freezing rain sensor probe. In addition to probe frequency data, the freezing rain sensor provides built in-test (BIT) results that are interpreted by the ASOS continuous self-test (CST) to detect sensor failures.

11.1.2 PHYSICAL DESCRIPTION

The freezing rain sensor (figure 11.1.1) consists of Electronics Enclosure 2MT3A1 installed on a mounting pole. The mounting pole itself is considered to be part of the supporting structure for the sensor and does not have a reference designator. The electronics enclosure (figure 11.1.2) contains all of the sensor field replaceable units (FRU's), which include Probe Assembly A1A1, Electronics Processor Board A1A2, and the Fiberoptic Module A1A2A1.

11.1.2.1 **Probe Assembly and Heat Sink**. Probe Assembly A1A1 is mounted to a heat sink made of 4.5 pounds of anodized aluminum, which, in turn, is mounted to the electronics enclosure. Heaters are built into the tip of the probe assembly and strut. After ice has accumulated on the probe to a predetermined thickness, ASOS instructs the sensor to turn on the probe assembly heaters to deice the probe. During deicing, maximum heater power is 400 watts. The deicing system is capable of completely melting approximately 3.8mm of ice on the probe and strut within 30 seconds at -20 degrees Celsius (°C). The heat sink dissipates the heat from the probe assembly following a deice cycle. The heat sink provides a recovery time (i.e., the time required for the sensor to revert to ambient temperature) of 10 minutes following a deice cycle. The heat sink also thermally isolates the probe assembly from the electronics, which allows accurate measurement at temperatures at or close to 0°C (32°F).

11.1.2.2 **Electronics Processor Board**. Electronics Processor Board A1A2 is the central controller for the freezing rain sensor. The electronics processor board is a microcontroller-based device with its controller program stored as firmware on an erasable programmable read only memory (EPROM) chip. The primary functions of the Electronics Processor board are to stimulate and read the probe assembly, control the probe assembly heaters, communicate with the DCP via the fiberoptic module, and perform sensor calibration when commanded. The Electronics Processor board also performs BIT on itself and the probe assembly and performs sensor calibration when commanded by the technician. The results of BIT are reported to the DCP and are ultimately displayed to the technician on the freezing rain page at the operator interface device (OID). The technician uses the laptop computer to issue calibration and other freezing rain sensor commands.

11.1.2.3 **Fiberoptic Module**. Fiberoptic Module A1A2A1 enables communication between the DCP and the electronics processor board. The fiberoptic module is identical to the one used in the DCP and other ASOS sensors. It converts DCP fiberoptic data signals to RS-232 format for the Electronics Processor board and vice versa.

11.1.3 FREEZING RAIN SENSOR CONFIGURATIONS

There are two configurations of the freezing rain sensor; the 0872C2 and 0872C3. The 0872C2 model freezing rain sensor uses a floating ground which requires a ground fault check (paragraph 11.5.2.1) prior to initial power-on and all maintenance activities. The 0872C3model uses a chassis ground and does not require a ground fault check.

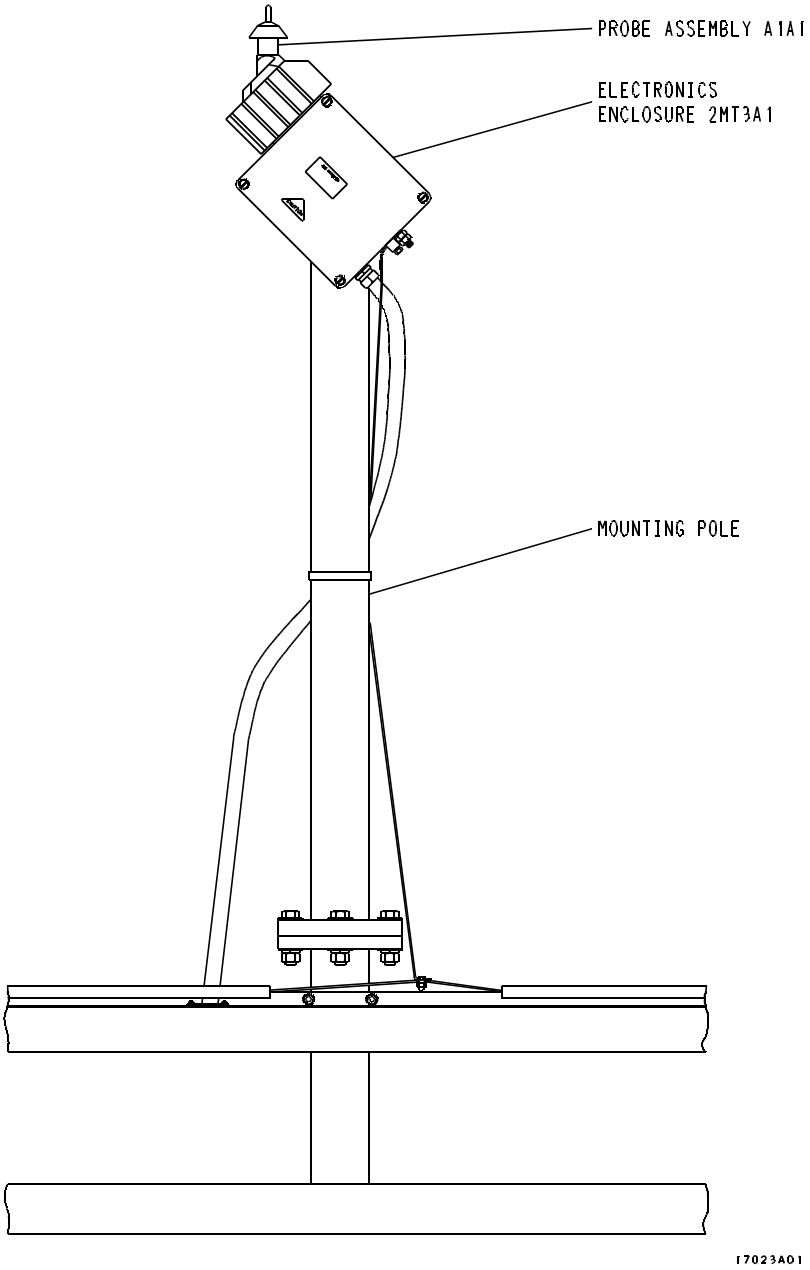

Figure 11.1.1. Freezing Rain Sensor

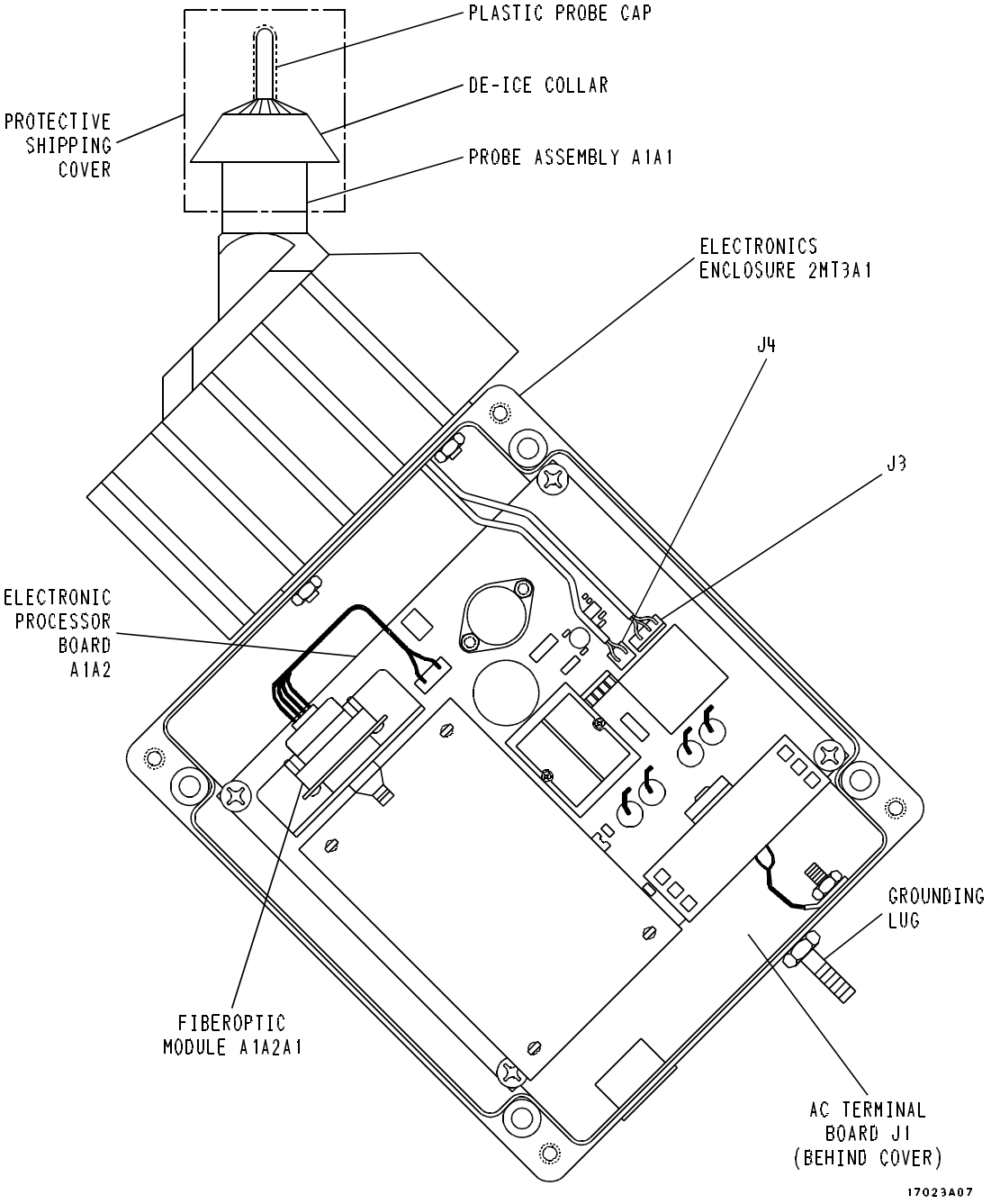

Figure 11.1.2. Electronics Enclosure