U.S. DEPARTMENT OF COMMERCE
National Oceanic and Atmospheric Administration
NATIONAL WEATHER SERVICE
Silver Spring, Md. 20910

MEMORANDUM FOR: All NWS Regional Headquarters, Regional Maintenance Specialists, Electronic Systems Analysts, and Electronics Technicians (Engineering Handbook (EHB)-13, Series II distribution)

FROM: W/OSO3 - John McNulty

SUBJECT: Transmittal Memorandum for EHB-13, Series II, Issuance 00-12

1. Material Transmitted:

Advanced Interactive Processing System (AWIPS), Section 4.0, AWIPS Contractor Interface Note 7: New Channel Service Unit/Data Service Units (CSU/DSU) Cable Connection Procedure.

2. Summary:

AWIPS Contractor Interface Note 7 provides instructions to nine River Forecast Center (RFC) sites on connecting cables to the new FTS2000 CSU/DSU.

3. Effect on Other Instructions:

None.

AWIPS CONTRACTOR INTERFACE NOTE 7 (for Electronics Systems Analysts)
Engineering Division
W/OSO321: FJZ

SUBJECT : New Channel Service Unit/ Data Service Unit (CSU/DSU) Cable Connection Procedures

PURPOSE : To provide instructions to nine River Forecast Center (RFC) sites on connecting cables to the new FTS2000 CSU/DSU.

SECURITY LEVEL : N/A

EQUIPMENT AFFECTED : New FTS2000 CSU/DSUs at nine RFC sites.

SITES AFFECTED : See attachment A.

REQUIRED ITEMS : Wide area network (WAN) upgrade kit consisting of circuit labels, and cables provided by PRC to each of the nine RFC sites.

TOOLS AND TEST EQUIPMENT REQUIRED : Small flat blade screwdriver

TIME REQUIRED : Approximately ½ hour

EFFECT ON OTHER INSTRUCTIONS : None

VERIFICATION STATEMENT : This CSU/DSU cable connection procedure was successfully completed and validated at the National Weather Service River Forecast Center (RFC) Cincinnati, OH (TIR); Minneapolis, MN (MSR); and Sacramento, CA (RSA).

BACKGROUND

AT&T technicians will install the Paradyne 3160 CSU/DSU, switched phone circuits, RJ-11 receptacle, cable, and plug at nine RFCs. Table 1 depicts the sites and the number of FTS2000 Enhanced Packet-Switched Service (EPSS) ports available at each site. Kansas City and the Tulsa RFC will receive two new EPSS ports; the remaining seven RFCs will receive one.

PRC has taken a cable inventory of each of the sites listed in table 1 and will send a WAN upgrade kit to sites requiring additional cables. All sites will receive a set of circuit labels.

NOTE: Electronic Systems Analysts are encouraged to be present during the installation of the new CSU/DSU. Notify the AT&T technician of the correct location for the new CSU/DSU.

PROCEDURE

A. Voice Circuit to Paradyne CSU/DSU Modem Port Connection

1. The new CSU/DSU should be installed in Rack 1 (SB Rack) on the shelf above the VIR switch (figure 1).

2. Connect the voice circuit RJ-11 plug to the corresponding CSU/DSU's modem port. Refer to the voice circuit and its corresponding CSU/DSU circuit ID listing in table 1. For RJ-11 receptacle location, refer to figures 2 and 3.

B. VIR Switch Module's M-port cable to the CSU/DSU's port 1 Connection

1. In table 1, locate your RFC and find the corresponding VIR module number in the "VIR Mod No." column. In the same table, locate the corresponding EPSS circuit ID number in the "EPSS Circuit ID" column.

2. In the back of the SB Rack, locate the VIR module from part B step 1. A DB25 cable should be connected to the M-port of the module.

3. Locate the other end of the cable, and connect it to port 1 of the CSU/DSU (figures 2 and 3) with EPSS circuit ID number from part B step 1.

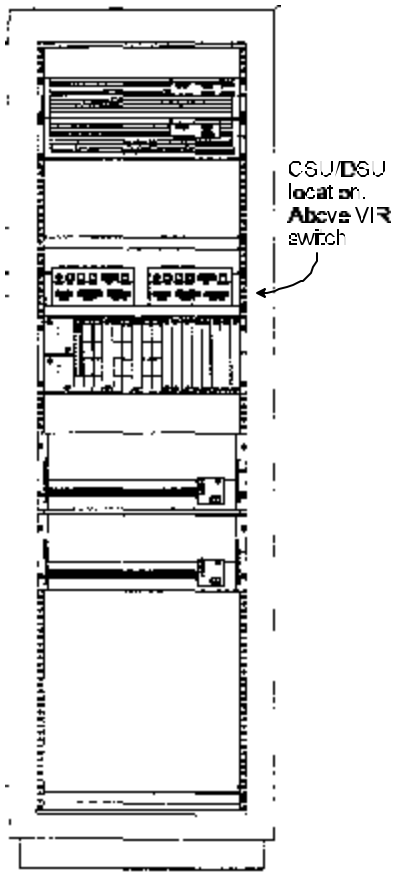

Figure 1

NOTE: The AB switch on the VIR module's front panel must be in the "A" position.

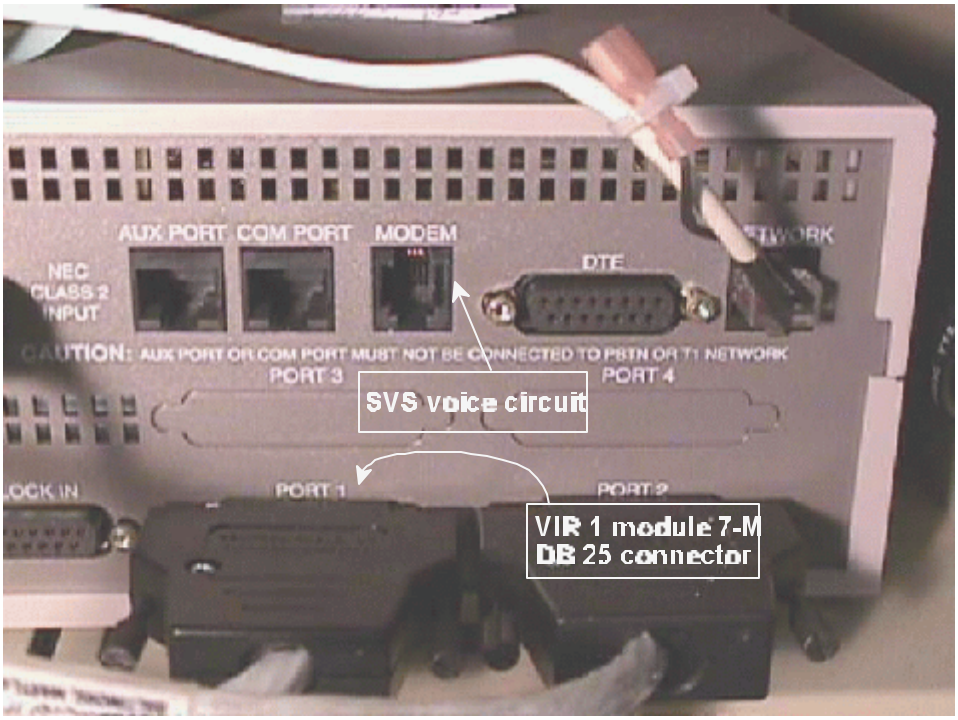

Figure 5**: EPSS Port C and F**

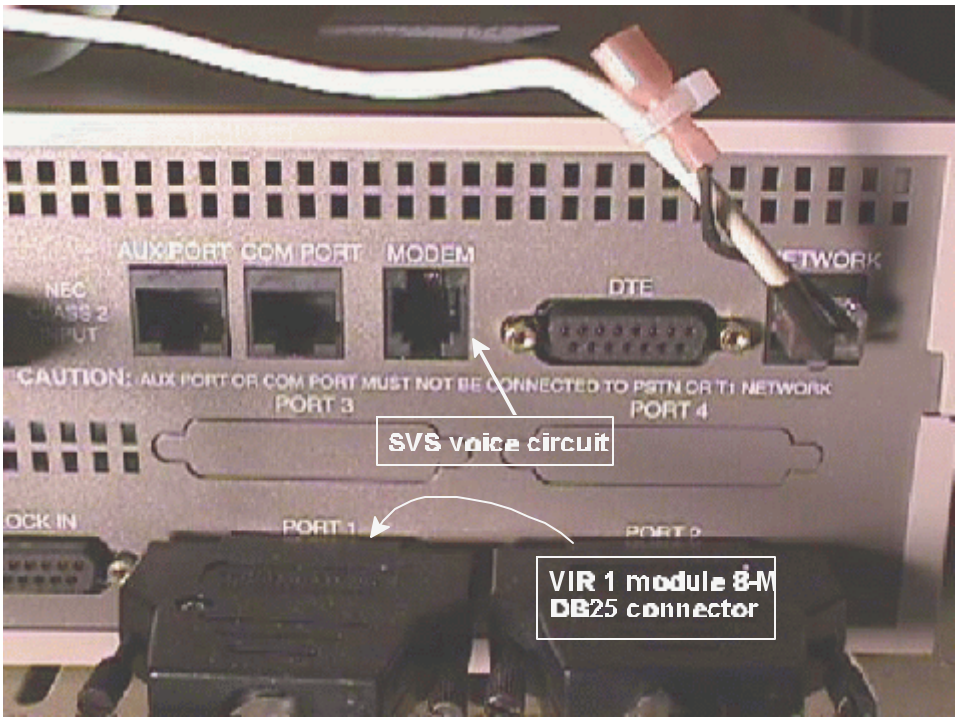

Figure 6**: EPSS Port D and E**

C. VIR Module Cable Swap Procedure (Kansas City and Tulsa RFC only)

1. Kansas City RFC. Locate VIR switch module #8 and switch the cables on port A and B (figure 8).

2. Tulsa RFC. Locate VIR switch module #7, and switch the cables on port A and B (figure 10).

D. Cable Label Procedure

1. Each WAN upgrade kit contains a set of labels. Attach the appropriate label to each end of the cable connected in part B step 3 (VIR module 7/8-M to CSU/DSU port 1).

2. Kansas City and Tulsa RFCs must relabel the switched cables.

E. WFO/RFC Router Port Assignments

The following descriptions and attached figures show the EPSS port assignments of the affected RFCs:

Figure #	RFC	EPSS Connection
4/5	Cincinnati, OH	Port D
6/7	Minneapolis, MN	Port C
8/9	Kansas City, MO	Port C and E, VIR switch module #8 cable swap
10/11	Tulsa, OK	Port D and F, VIR switch module #7 cable swap
12/13	Sacramento, CA	Port C
14/15	Salt Lake City, UT	Port D
16/17	Ft. Worth, TX	Port C
18/19	New Orleans, LA	Port D
20/21	Atlanta, GA	Port C

F. Acceptance Test Procedure

To test cable connections and CSU/DSU operation, call the NCF at 301-713-1284. Ask for Karl Baetcke or James Washington

Table 1
RFC Cable Connection

RFC	EPSS Port	Refer to Figure No.	Router/Port	EPSS Circuit ID	Voice Circuit ID	VIR Mod No.	Perform VIR M port to CSU/DSU Connection	Swap VIR A, B port cables
TIR (Cincinnati)	D	4/5	R2/S4	DLCI 772 DHEM904551 DHEM904551 (CT1)	937-655-8162	8	yes	no
MSR (Minneapolis)	C	6/7	R1/S4	DLCI 682 DHEM904552 DHEM904552 (CT1)	612-361-3584	7	yes	no
KRF (Kansas City)	C	8/9	R1/S4	DLCI 607 DTEM904554 DHEM904554 (CT1)	816-987-6170	7	yes	no
KRF (Kansas City)	E	8/9	R1/S5	DLCI 608 DTEM904555 DHEM904557 (CT1)	816-987-6175	8	yes	yes
TUA (Tulsa)	D	10/11	R2/S4	DLCI 622 DHEM904562 DHEM904562 (CT1)	918-838-2852	8	yes	no
TUA (Tulsa)	F	10/11	R2/S5	DLCI 623 DTEM904564 DHEM904565 (CT1)	918-838-2811	7	yes	yes
RSA (Sacramento)	C	12/13	R1/S4	DLCI 902 DTEM904674 DHEM904678 (CT1)	916-974-7567	7	yes	no
STR (Salt Lake C)	D	14/15	R2/S4	DLCI 612 DTEM904679 DHEM904680 (CT1)	801-363-2025	8	yes	no
FWR (Ft. Worth)	C	16/17	R1/S4	DLCI 727 DTEM904676 DHEM904677 (CT1)	817-834-8475	7	yes	no
STET (New Orleans)	D	18/19	R2/S4	DLCI 722 DHEM904685 DHEM904685 (CT1)	504-643-8658	8	yes	no
ALR (Atlanta)	C	20/21	R1/S4	DLCI 802 DHEM904683 DHEM904683 (CT1)	770-632-7167	7	yes	no

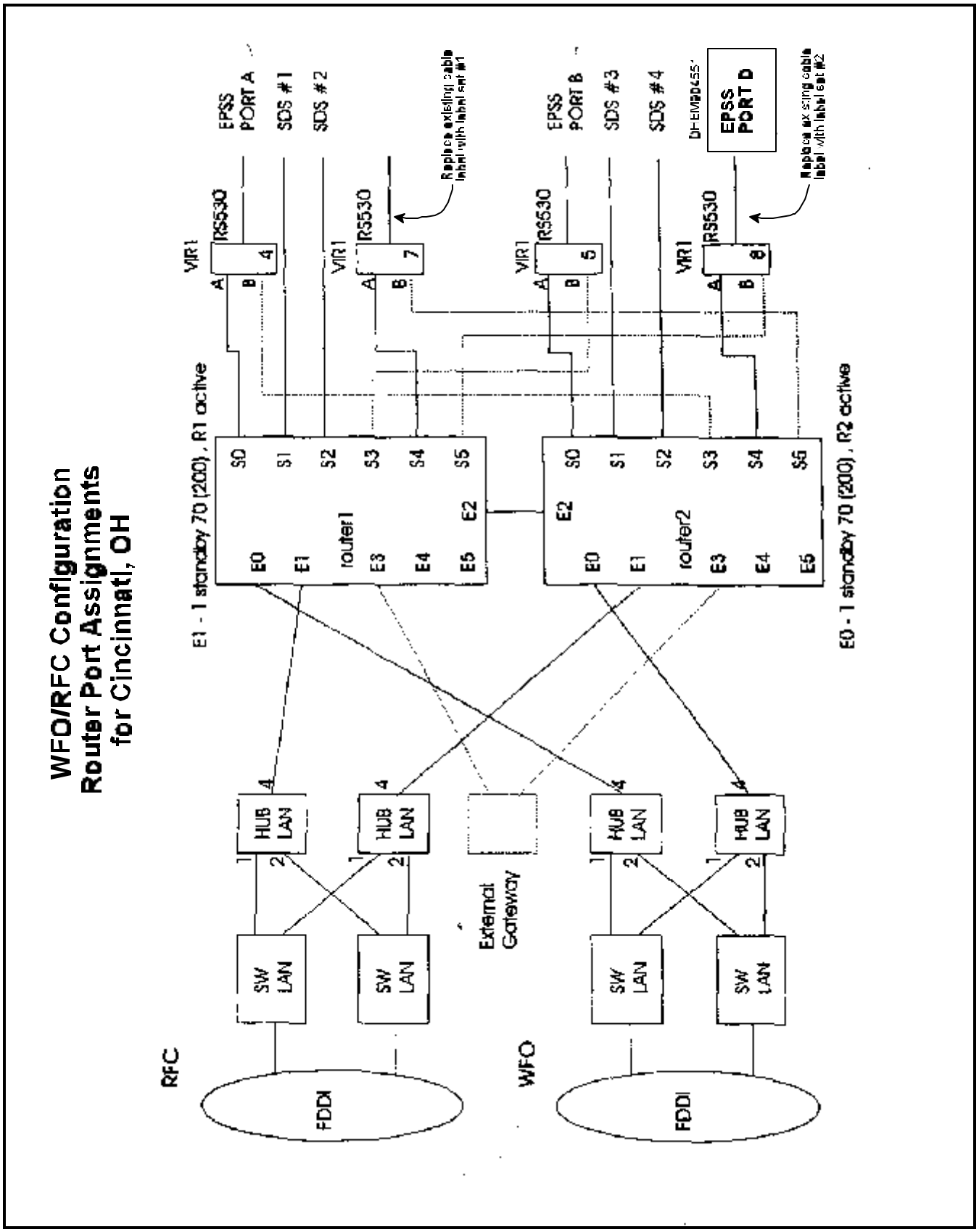
WFO/RFC Configuration
Router Port Assignments
for Cincinnati, OH
E1 - 1 standby 70 (200), R1 active
E0 - 1 standby 70 (200), R2 active
router1
router2
S0
S1
S2
S3
S4
S5
E0
E1
E2
E3
E4
E5
VIR1
RS530
A
B
4
5
7
8
EPSS PORT A
SDS #1
SDS #2
EPSS PORT B
SDS #3
SDS #4
EPSS PORT D
Replace existing cable label with label set #1
Replace existing cable label with label set #2
HUB LAN
SW LAN
External Gateway
RFC
WFO
FDDI
FDDI

Figure 4

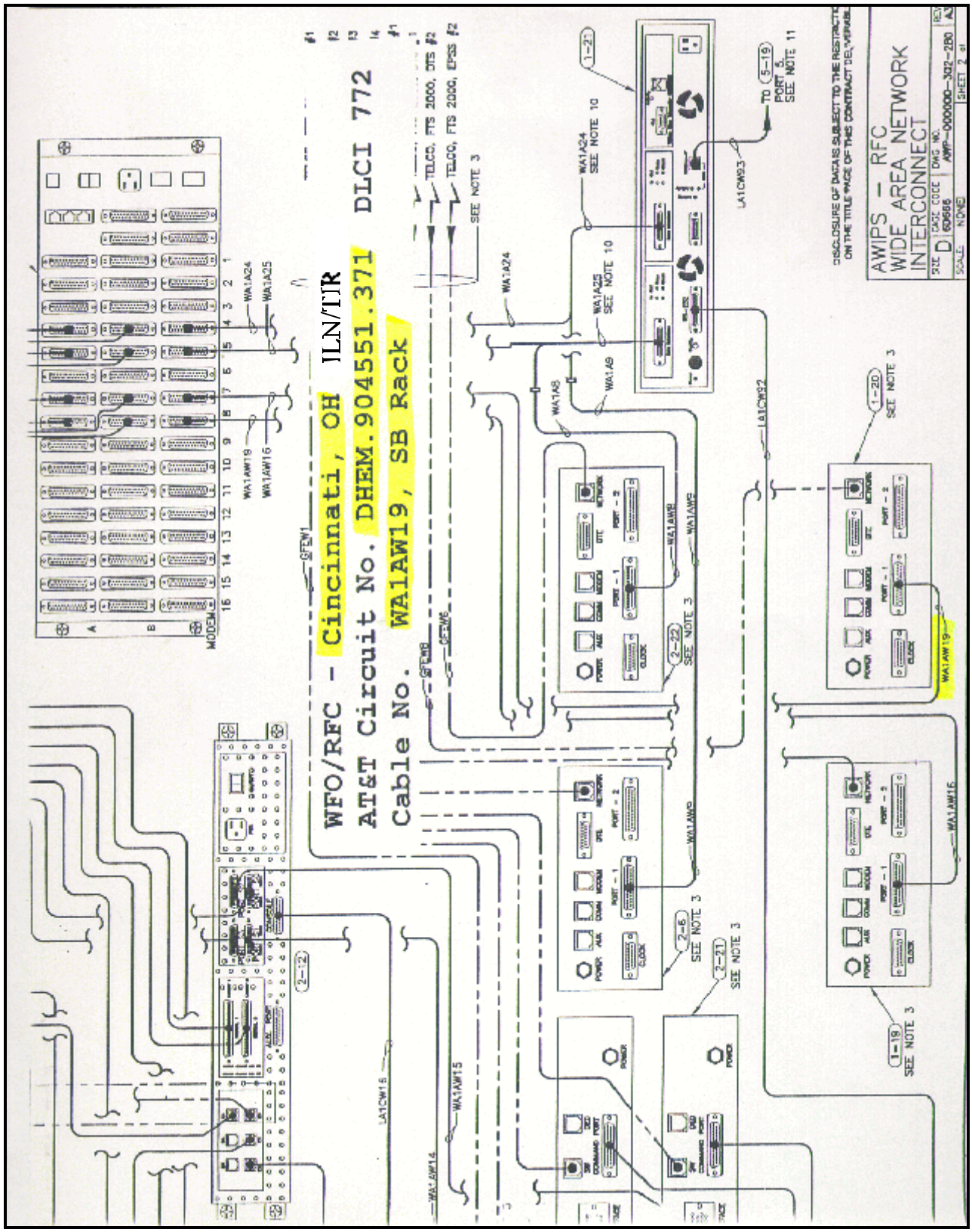
WFO/RFC - Cincinnati, OH ILN/TR
AT&T Circuit No. DHEM.904551.371 DLCI 772
Cable No. WA1AW19, SB Rack
AWIPS - RFC
WIDE AREA NETWORK
INTERCONNECT

Figure 8

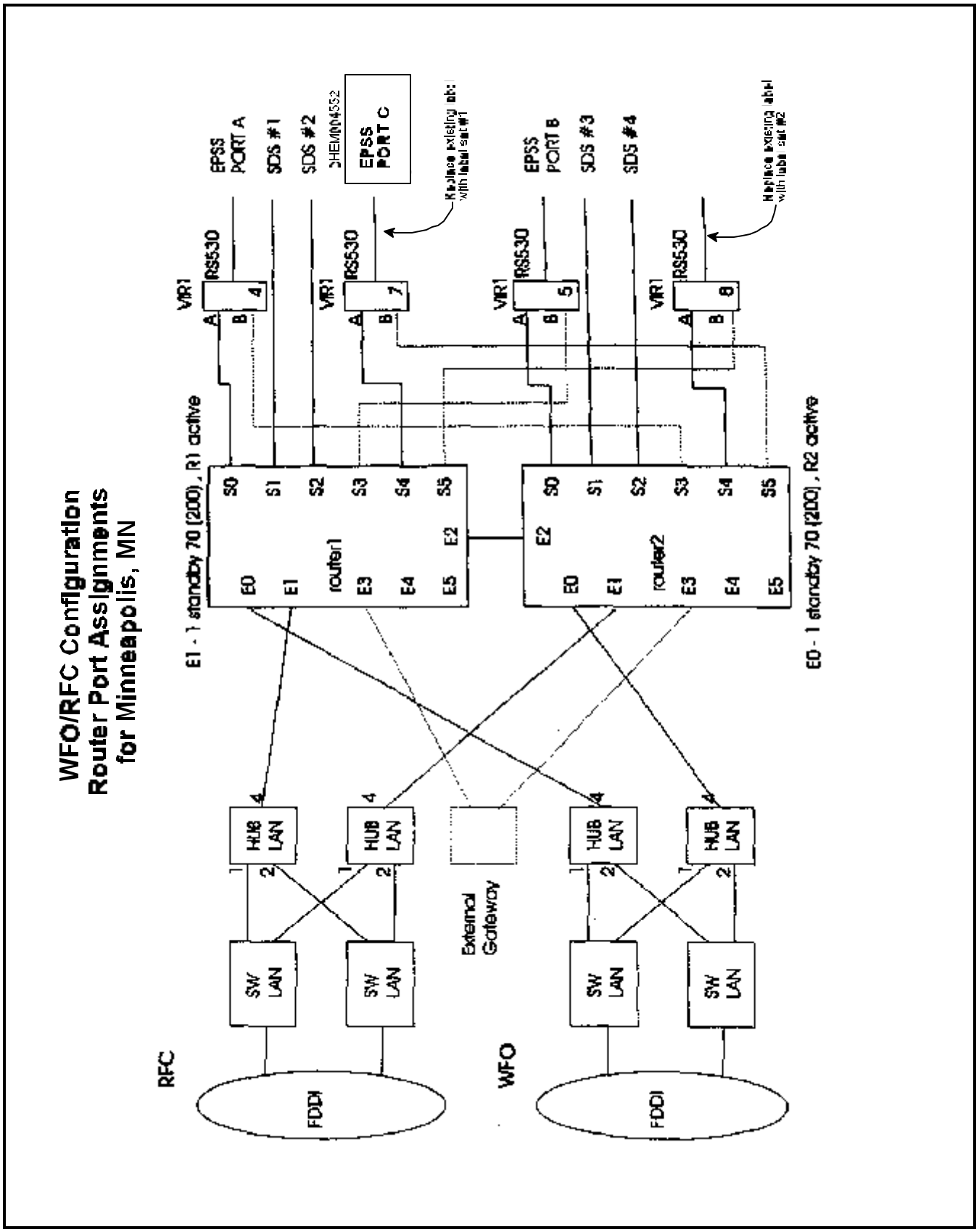
WFO/RFC Configuration
Router Port Assignments
for Minneapolis, MN
EPSS PORT A
SDS #1
SDS #2
EPSS PORT C
EPSS PORT B
SDS #3
SDS #4
VIR1
RS530
router1
router2
E1 - 1 standby 70 (200), R1 active
E0 - 1 standby 70 (200), R2 active
HUB LAN
SW LAN
External Gateway
RFC
WFO
FDDI

Figure 6

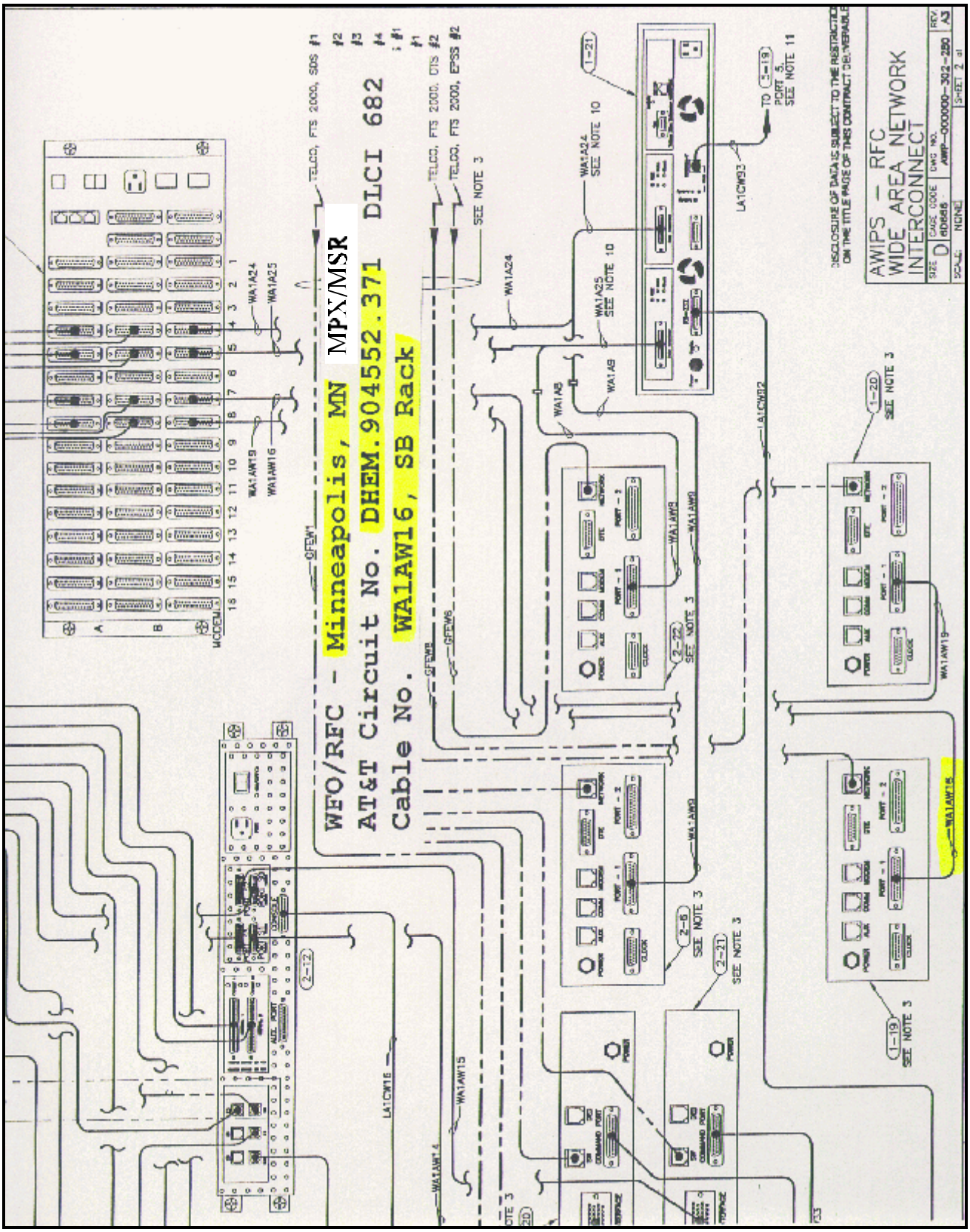
WFO/RFC - Minneapolis, MN MPX/MSR
AT&T Circuit No. DHEM.904552.371 DLCI 682
Cable No. WA1AW16, SB Rack
AWIPS - RFC
WIDE AREA NETWORK
INTERCONNECT

Figure 10

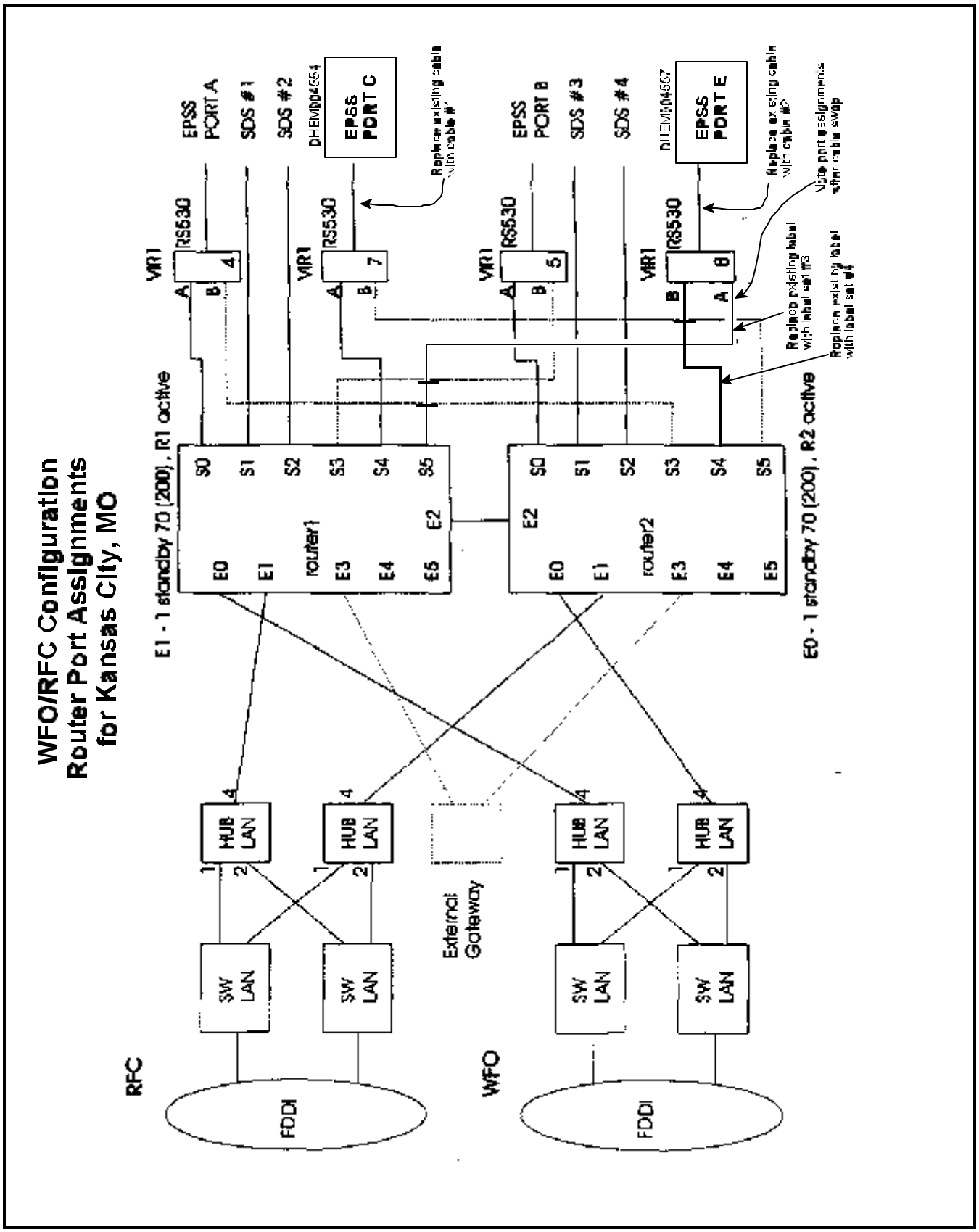
WFO/RFC Configuration
Router Port Assignments
for Kansas City, MO
E1 - 1 standby 70 (200), R1 active
E0 - 1 standby 70 (200), R2 active
router1
router2
EPSS PORT A
SDS #1
SDS #2
EPSS PORT C
EPSS PORT B
SDS #3
SDS #4
EPSS PORT E
RS530
VIR1
Replace existing cable with cable #7
Replace existing cable with cable #5
Note port assignments when cable swap
Replace existing label with label set #3
Replace existing label with label set #4
HUB LAN
SW LAN
External Gateway
FDDI
RFC
WFO

Figure 8

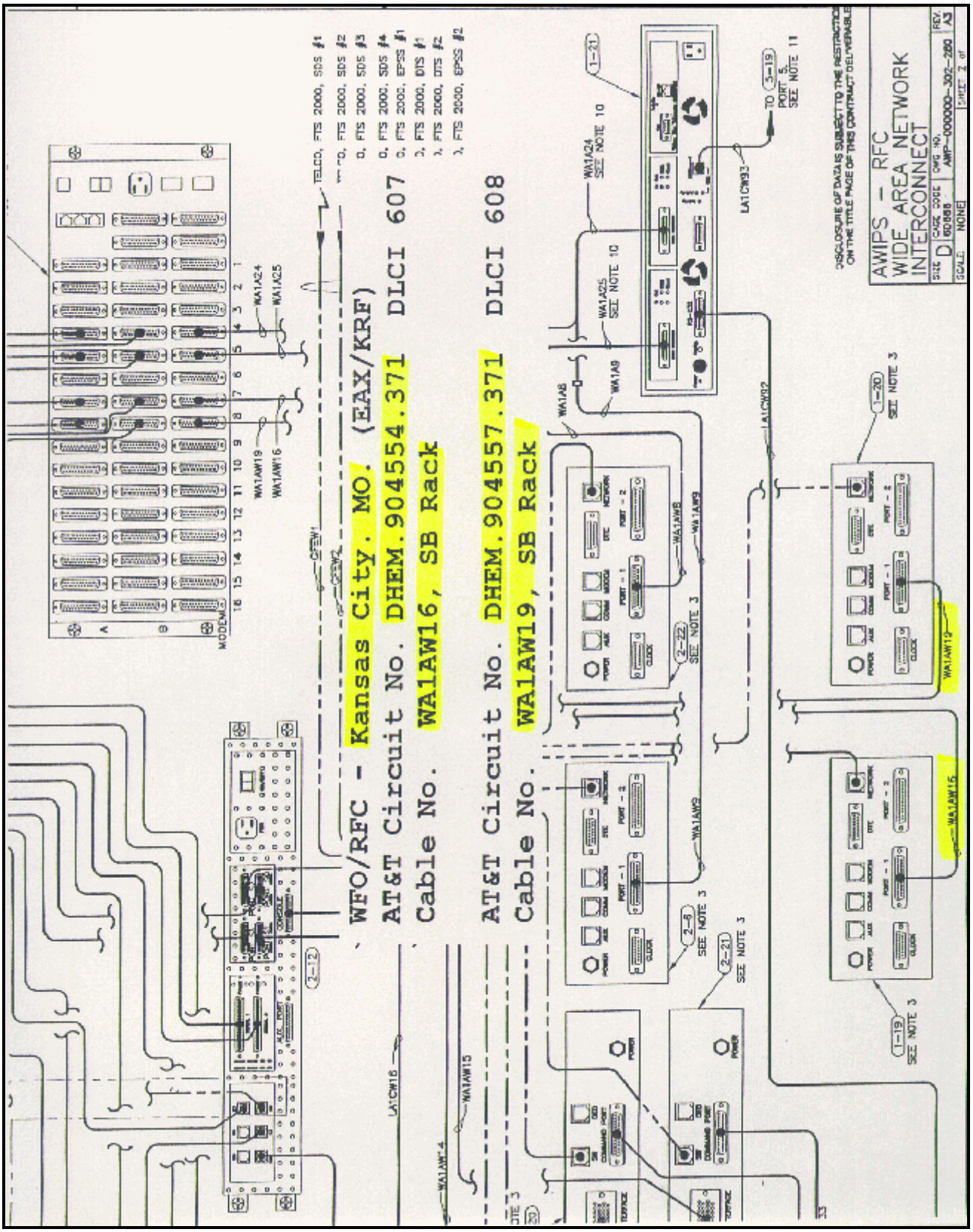
WFO/RFC - Kansas City, MO. (EAX/KRF)
AT&T Circuit No. DHEM.904554.371 DLCI 607
Cable No. WA1AW16, SB Rack
AT&T Circuit No. DHEM.904557.371 DLCI 608
Cable No. WA1AW19, SB Rack
AWIPS - RFC
WIDE AREA NETWORK
INTERCONNECT

Figure 12

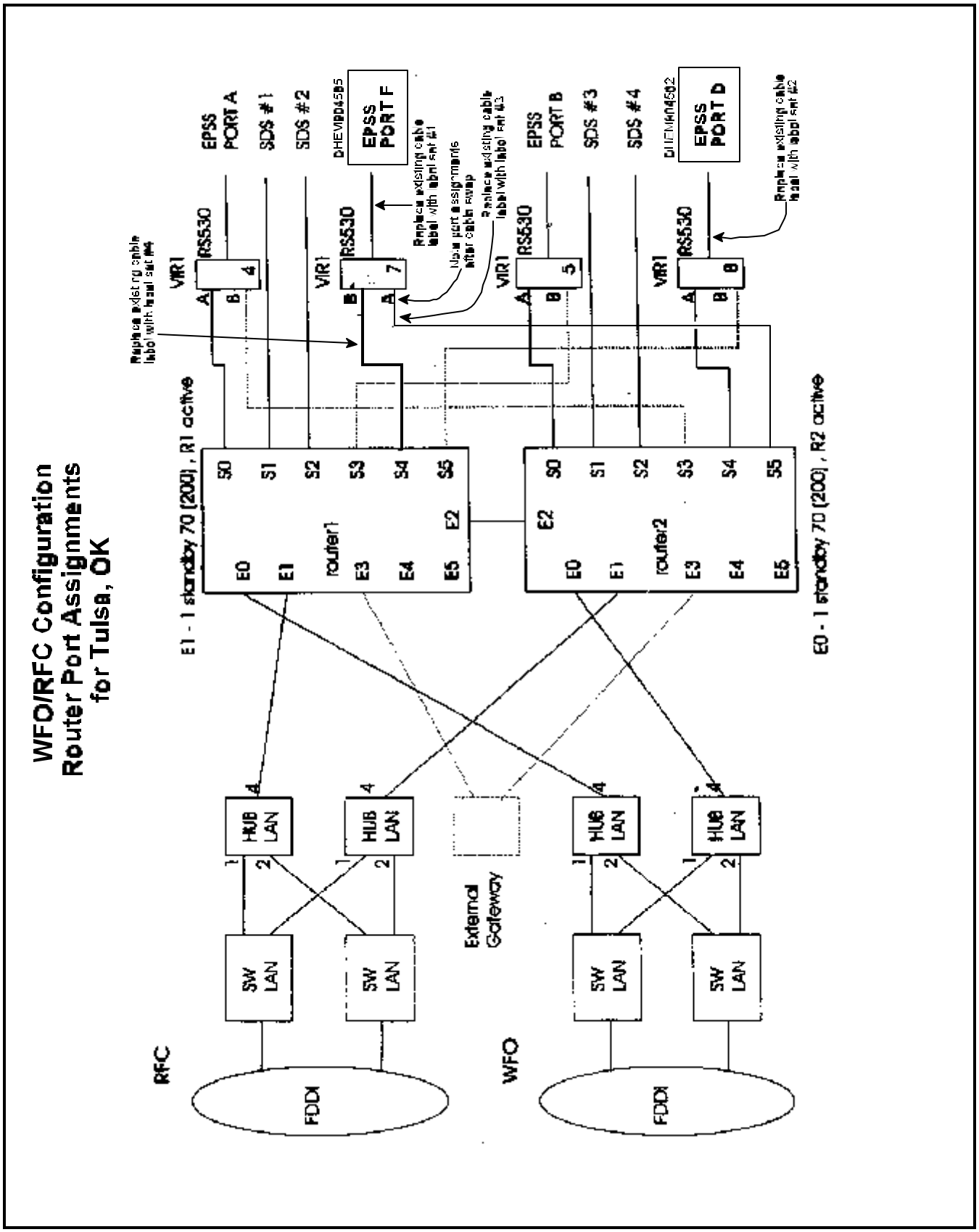
WFO/RFC Configuration
Router Port Assignments
for Tulsa, OK
E1 - 1 standby 70 (200) , R1 active
E0 - 1 standby 70 (200) , R2 active
router1
router2
RFC
WFO
FDDI
FDDI
SW LAN
SW LAN
SW LAN
SW LAN
HUB LAN
HUB LAN
HUB LAN
HUB LAN
External Gateway
RS530
EPSS PORT A
SDS #1
SDS #2
EPSS PORT F
EPSS PORT B
SDS #3
SDS #4
EPSS PORT D

Figure 10

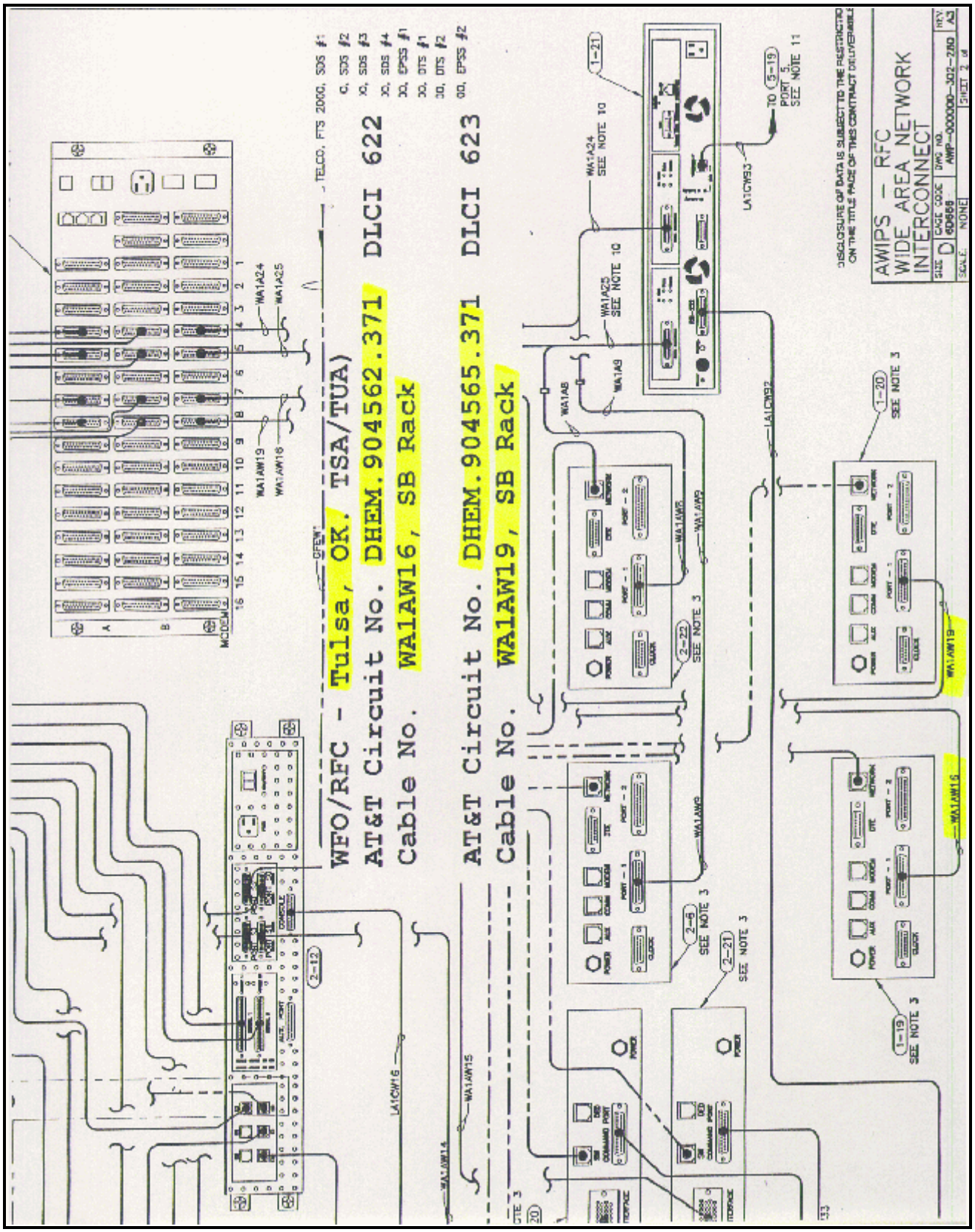
WFO/RFC - Tulsa, OK. TSA/TUA)
AT&T Circuit No. DHEM.904562.371 DLCI 622
Cable No. WA1AW16, SB Rack
AT&T Circuit No. DHEM.904565.371 DLCI 623
Cable No. WA1AW19, SB Rack
AWIPS - RFC
WIDE AREA NETWORK
INTERCONNECT

Figure 14

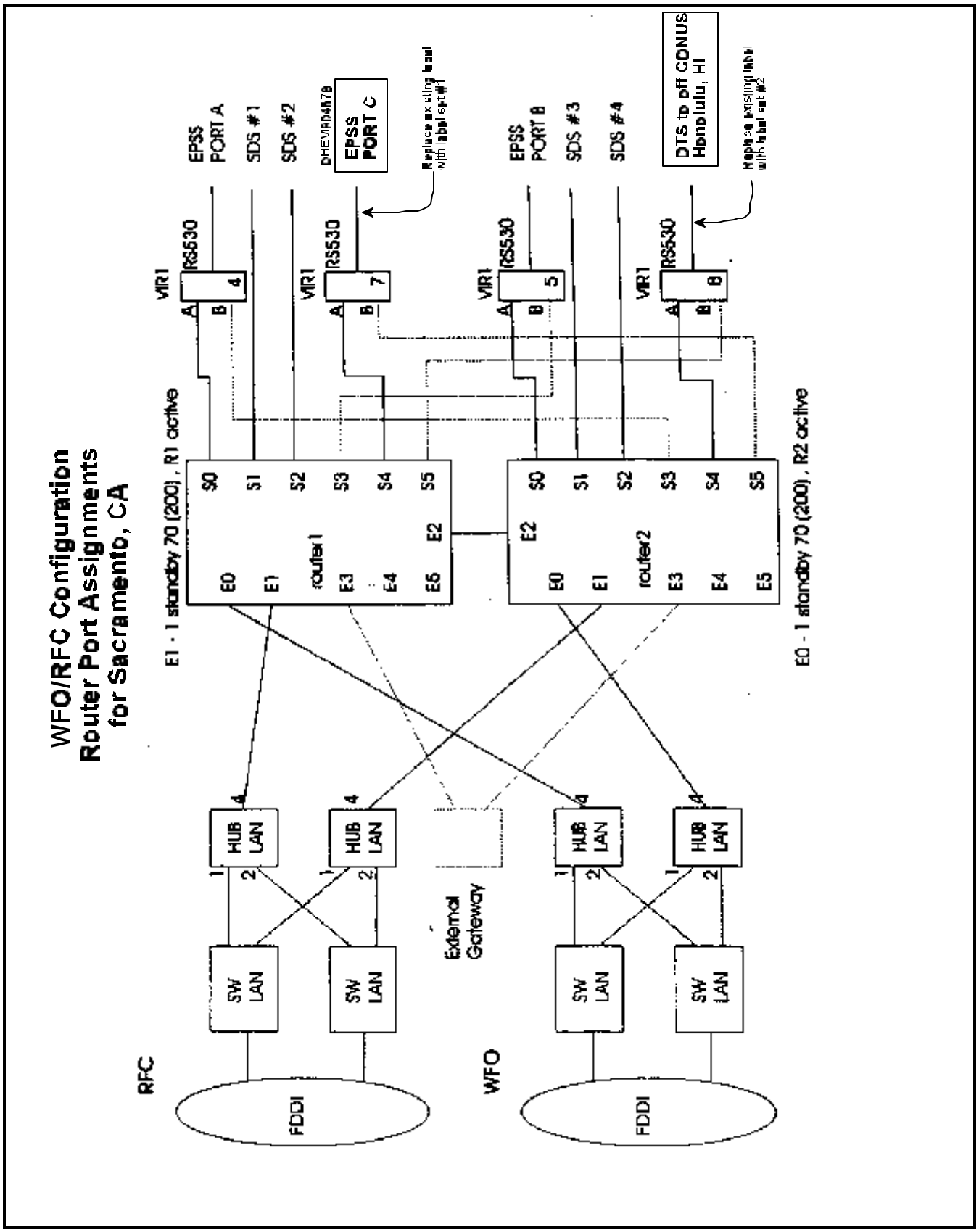
WFO/RFC Configuration
Router Port Assignments
for Sacramento, CA
EPSS PORT A
SDS #1
SDS #2
EPSS PORT C
EPSS PORT B
SDS #3
SDS #4
DTS to off CONUS Honolulu, HI
VIR1
RS530
E1 - 1 standby 70 (200), R1 active
E0 - 1 standby 70 (200), R2 active
router1
router2
S0
S1
S2
S3
S4
S5
E0
E1
E2
E3
E4
E5
HUB LAN
SW LAN
External Gateway
RFC
WFO
FDDI

Figure 12

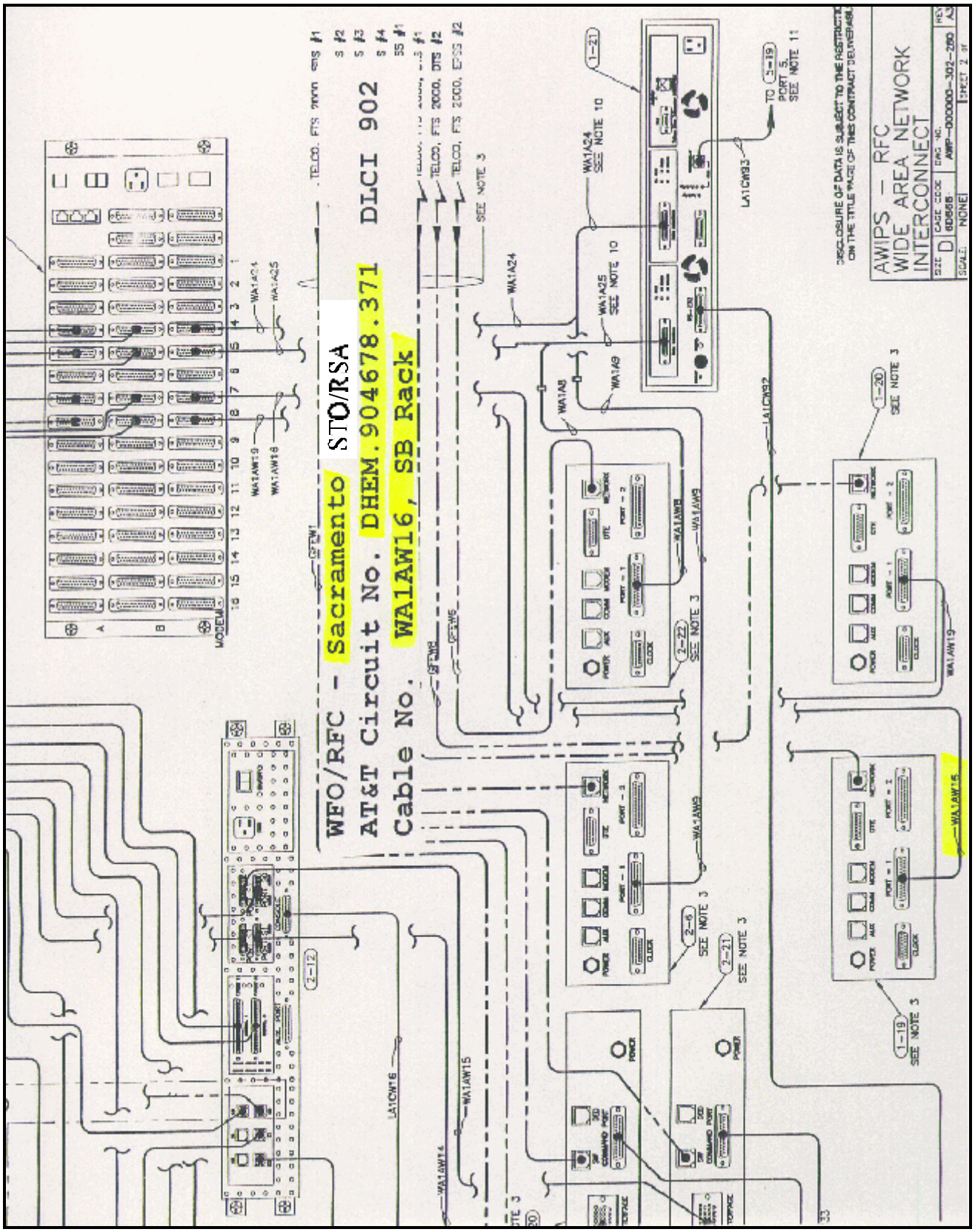
WFO/RFC - Sacramento STO/RSA
AT&T Circuit No. DHEM.904678.371 DLCI 902
Cable No. WA1AW16, SB Rack
AWIPS - RFC
WIDE AREA NETWORK
INTERCONNECT

Figure 16

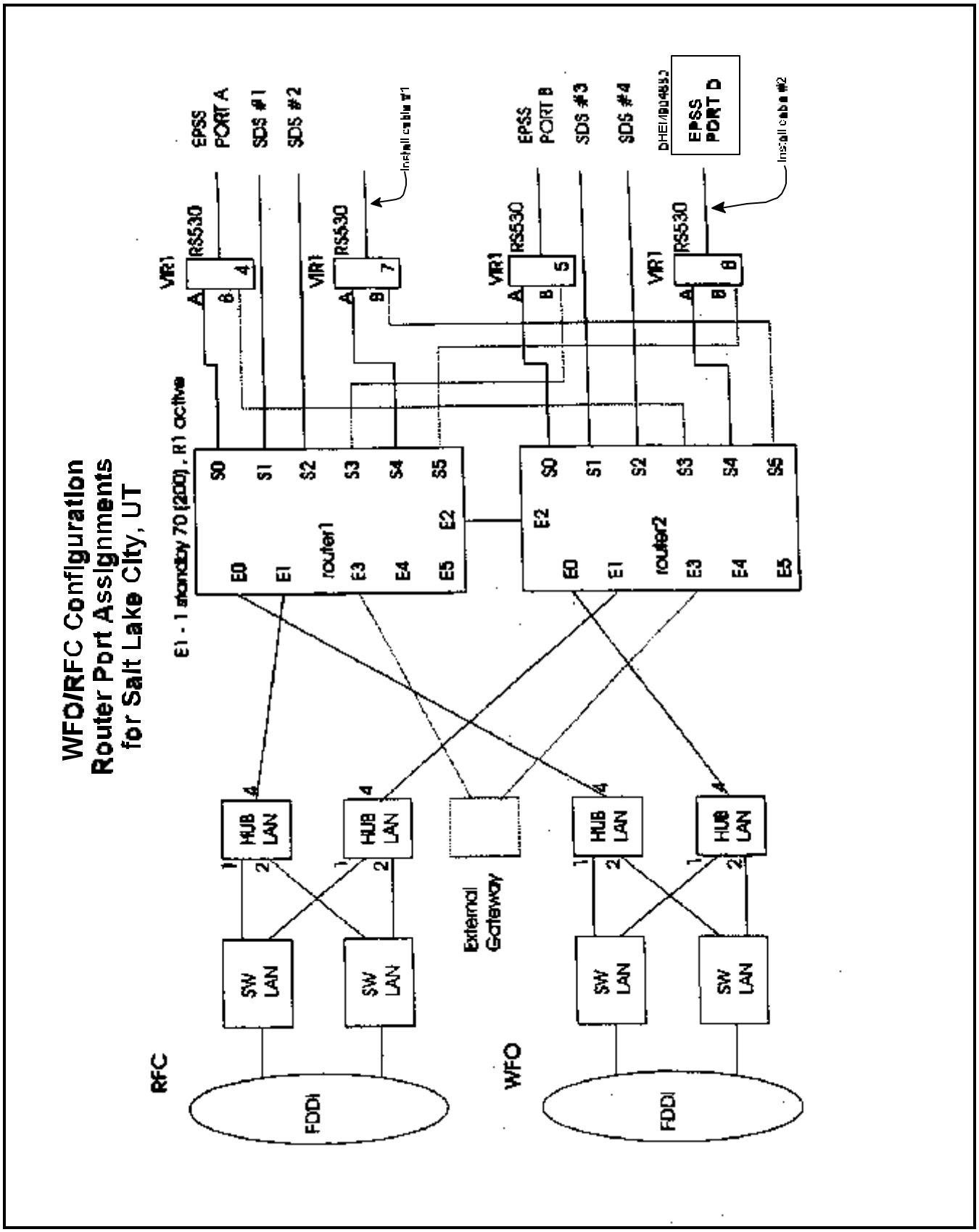
WFO/RFC Configuration
Router Port Assignments
for Salt Lake City, UT
E1 - 1 standby 70 (200), R1 active
router1
router2
S0
S1
S2
S3
S4
S5
E0
E1
E2
E3
E4
E5
VIR1
RS530
EPSS PORT A
SDS #1
SDS #2
EPSS PORT B
SDS #3
SDS #4
EPSS PORT D
HUB LAN
SW LAN
External Gateway
FDDI
RFC
WFO

Figure 14

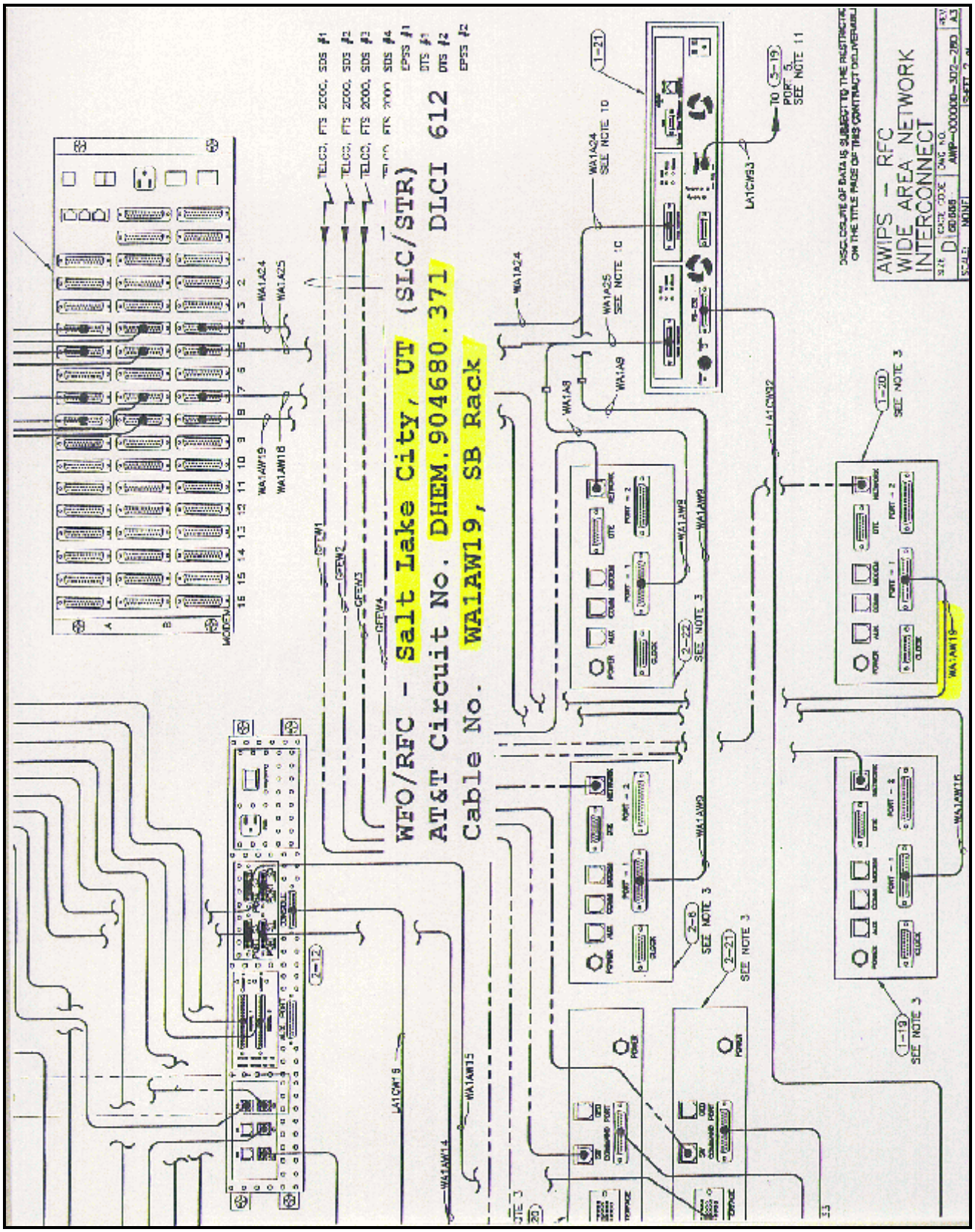
WFO/RFC - Salt Lake City, UT (SLC/STR)
AT&T Circuit No. DHEM.904680.371 DLCI 612
Cable No. WA1AW19, SB Rack
AWIPS - RFC
WIDE AREA NETWORK
INTERCONNECT

Figure 18

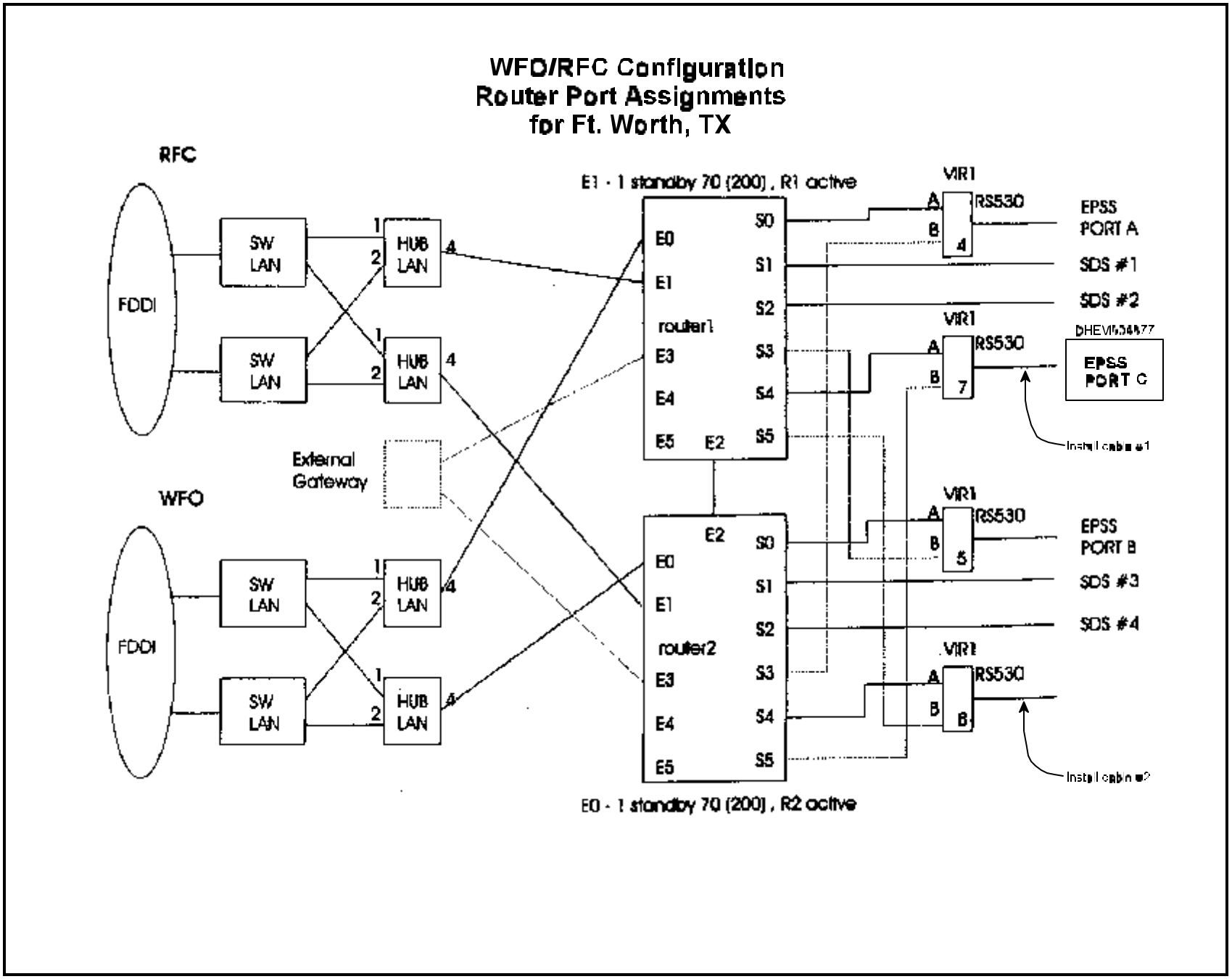
WFO/RFC Configuration
Router Port Assignments
for Ft. Worth, TX
RFC
FDDI
SW LAN
SW LAN
HUB LAN
HUB LAN
External Gateway
WFO
FDDI
SW LAN
SW LAN
HUB LAN
HUB LAN
E1 - 1 standby 70 (200), R1 active
E0
E1
router1
E3
E4
E5
E2
S0
S1
S2
S3
S4
S5
E2
E0
E1
router2
E3
E4
E5
S0
S1
S2
S3
S4
S5
E0 - 1 standby 70 (200), R2 active
VIR1
RS530
EPSS PORT A
SDS #1
SDS #2
EPSS PORT C
EPSS PORT B
SDS #3
SDS #4

Figure 16

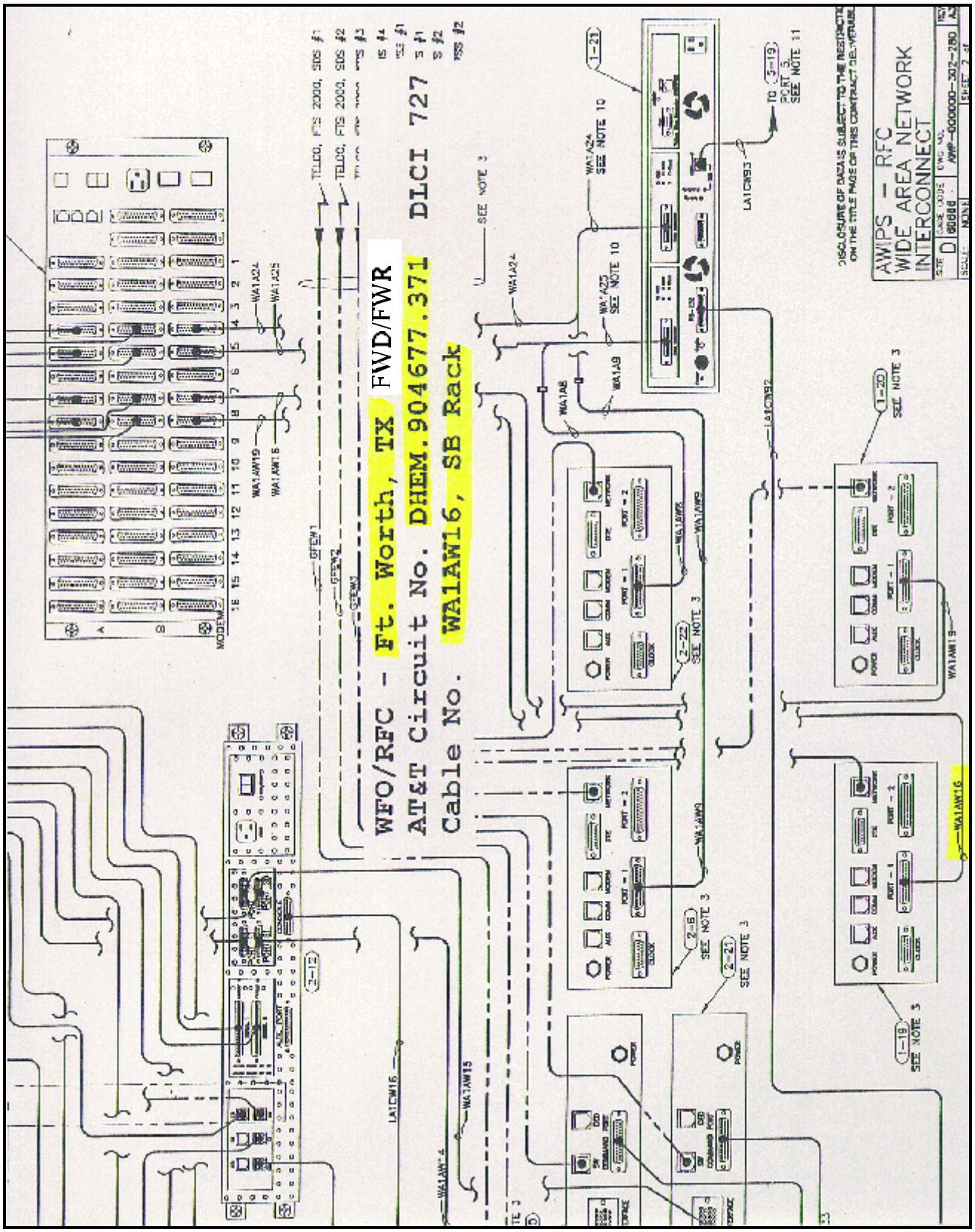
WFO/RFC - Ft. Worth, TX FWD/FWR
AT&T Circuit No. DHEM.904677.371 DLCI 727
Cable No. WA1AW16, SB Rack
AWIPS - RFC
WIDE AREA NETWORK
INTERCONNECT

Figure 20

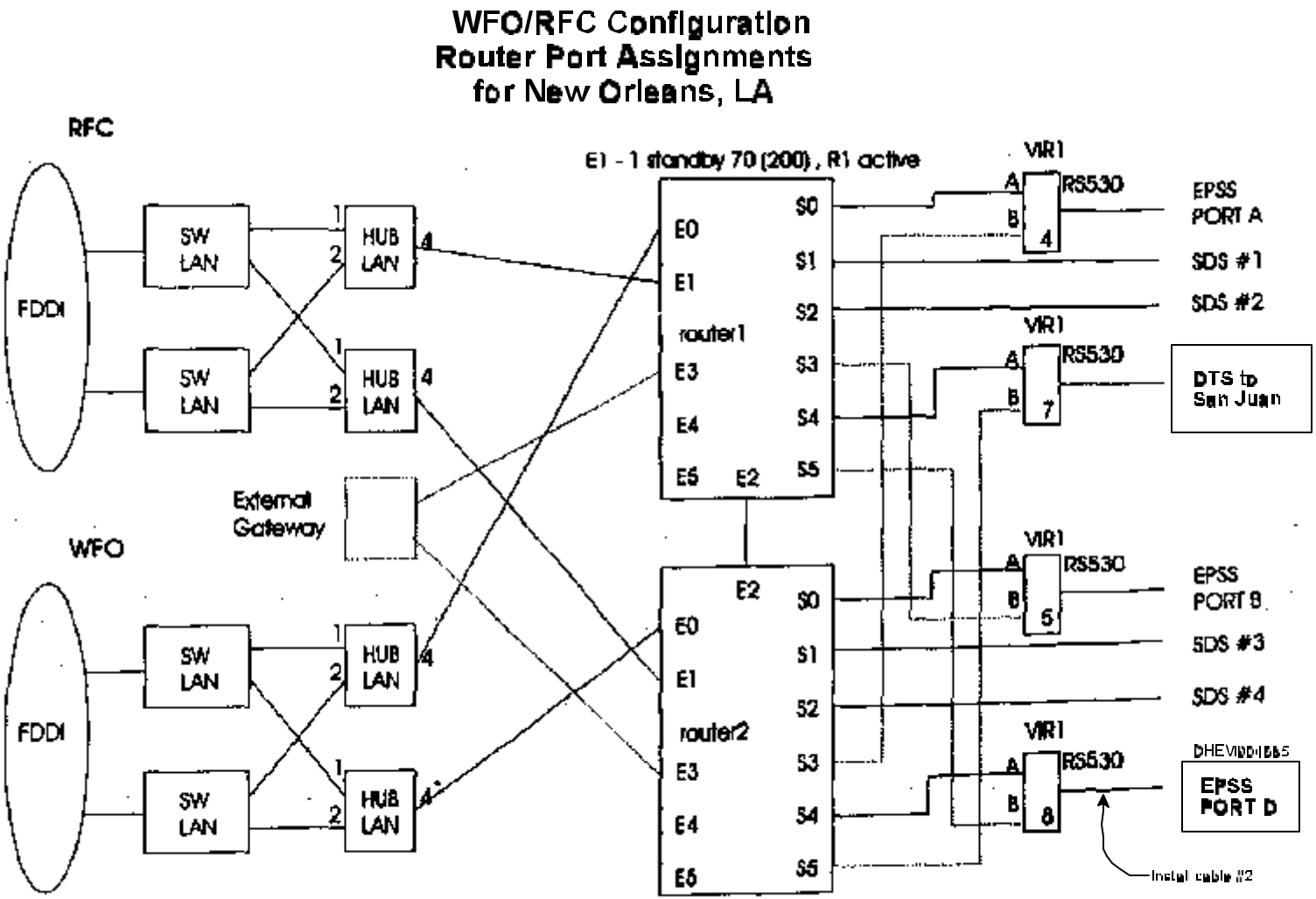
WFO/RFC Configuration
Router Port Assignments
for New Orleans, LA
RFC
WFO
FDDI
FDDI
SW LAN
SW LAN
SW LAN
SW LAN
HUB LAN
HUB LAN
HUB LAN
HUB LAN
External Gateway
E1 - 1 standby 70 (200), R1 active
router1
router2
E0
E1
E2
E3
E4
E5
S0
S1
S2
S3
S4
S5
VIR1
RS530
EPSS PORT A
SDS #1
SDS #2
DTS to San Juan
EPSS PORT B
SDS #3
SDS #4
EPSS PORT D
Install cable #2

Figure 21

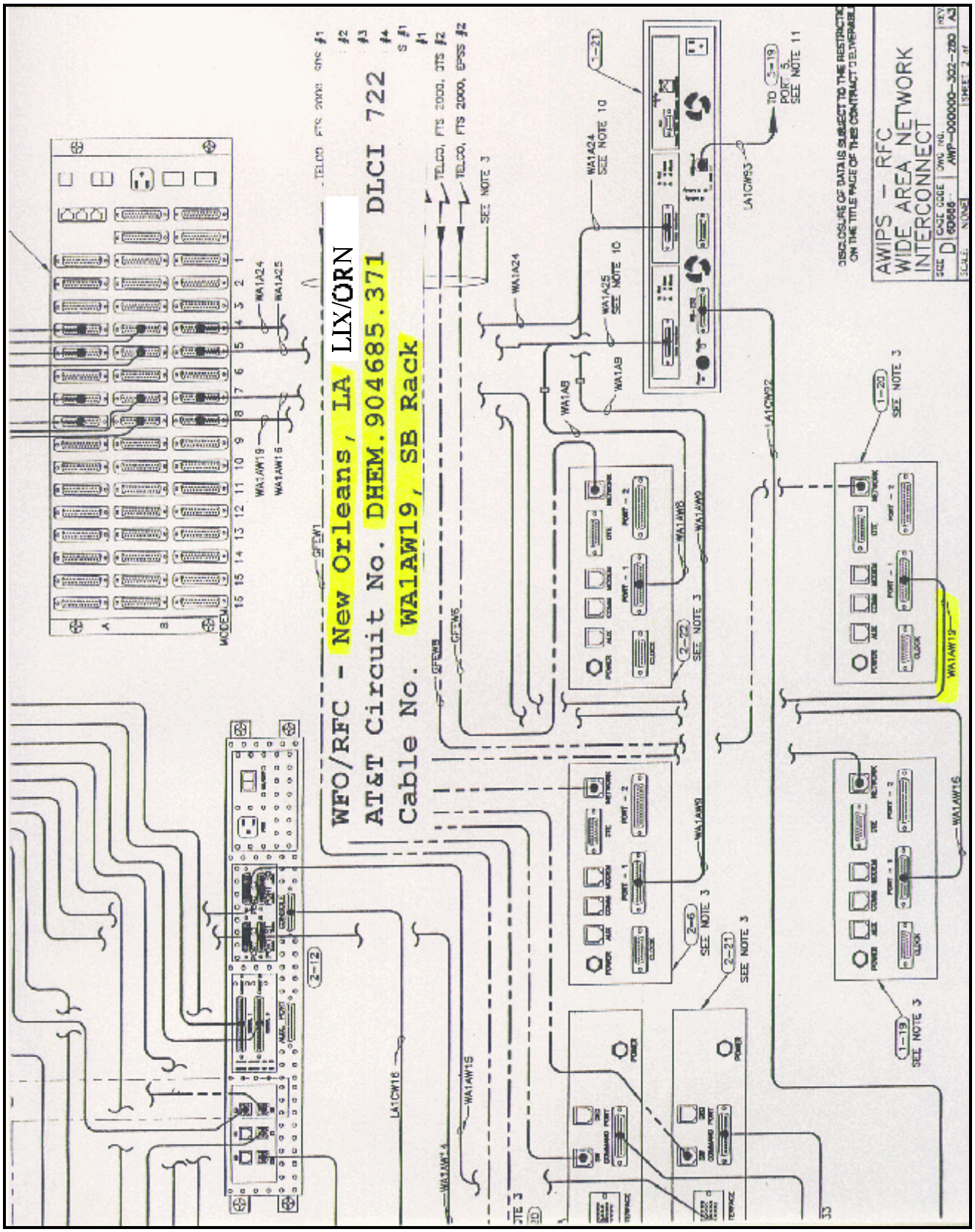
WFO/RFC - New Orleans, LA LIX/ORN
AT&T Circuit No. DHEM.904685.371 DLCI 722
Cable No. WA1AW19, SB Rack
AWIPS - RFC
WIDE AREA NETWORK
INTERCONNECT

Figure 22

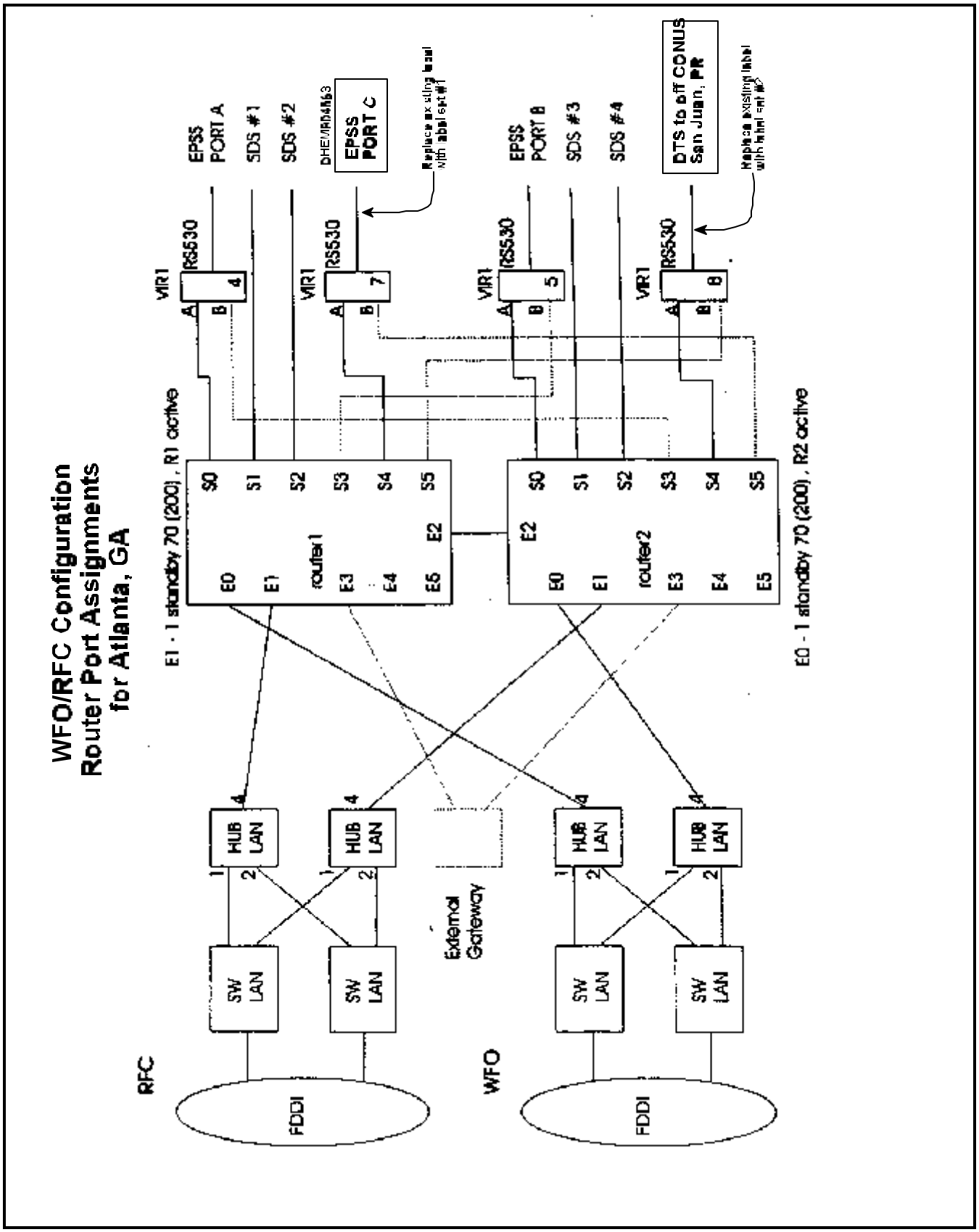
WFO/RFC Configuration
Router Port Assignments
for Atlanta, GA
E1 - 1 standby 70 (200), R1 active
E0 - 1 standby 70 (200), R2 active
router1
router2
S0
S1
S2
S3
S4
S5
E0
E1
E2
E3
E4
E5
VIR1
RS530
EPSS PORT A
SDS #1
SDS #2
DHE/IRD4563
EPSS PORT C
EPSS PORT B
SDS #3
SDS #4
DTS to off CONUS San Juan, PR
HUB LAN
SW LAN
FDDI
External Gateway
RFC
WFO

Figure 20

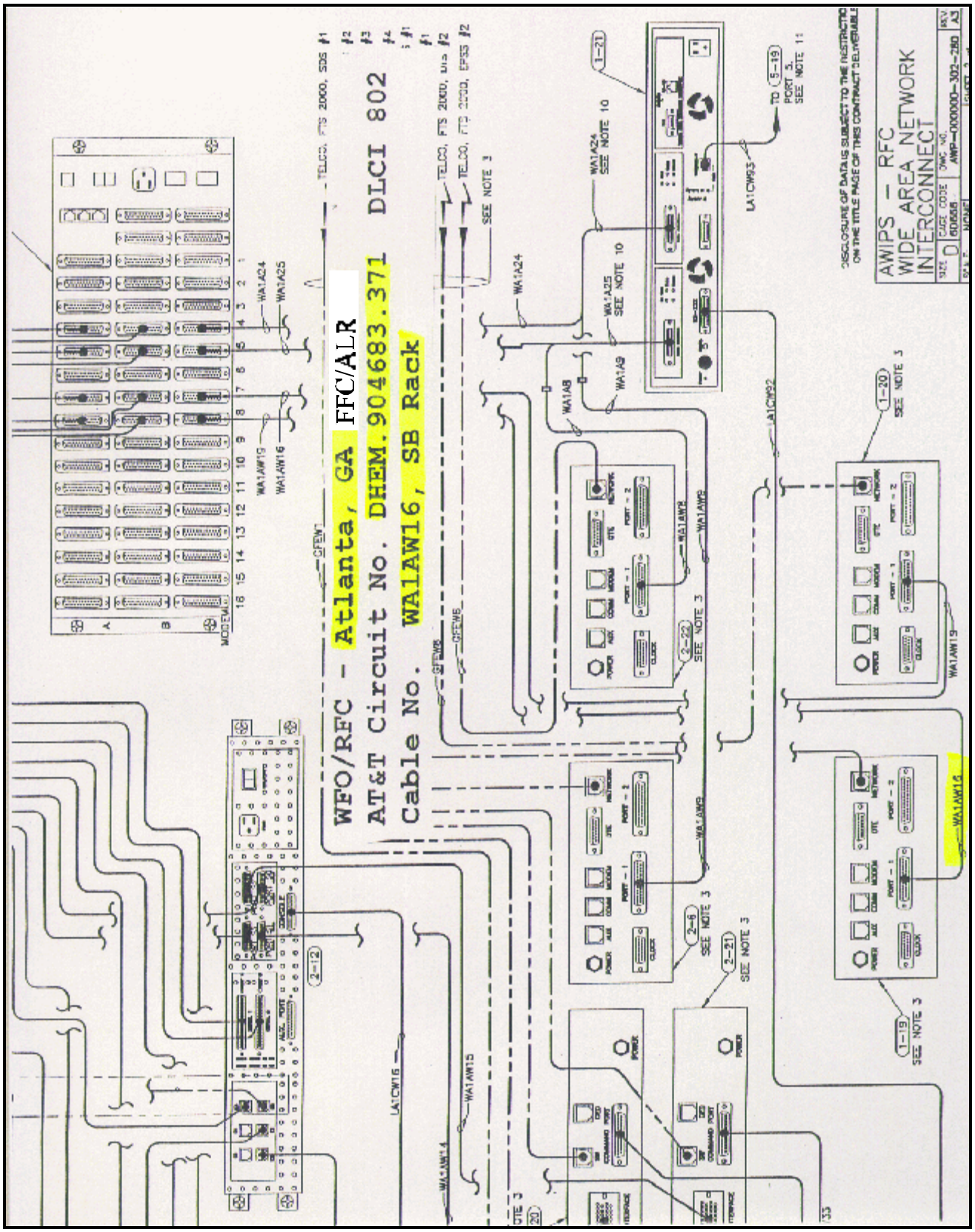
WFO/RFC - Atlanta, GA FFC/ALR
AT&T Circuit No. DHEM.904683.371 DLCI 802
Cable No. WA1AW16, SB Rack
AWIPS - RFC
WIDE AREA NETWORK
INTERCONNECT

Figure 24

REPORT MODIFICATION

Report the completed modification on a WS Form A-26 according to instructions in Engineering Handbook 4 (EHB-4), Part 2, and in EHB-4, Appendix H. A sample A-26 form is provided as Attachment B. As an additional guide, refer to table 2.

Table 2

Block #	Block Type	Information
5	Description	Perform modification I.A.W. AWIPS Contractor Interface Note 7
7	Equipment Code	AWIPS
8	Serial Number	001
15	Comments	Connected CSU/DSU Cables to new FTS2000 CSU/DSU I.A.W. AWIPS Contractor Interface Note 7
17a	Mod. No.	C7

TECHNICAL ASSISTANCE

For questions or problems regarding the installation call:

- NCF, Karl Baetcke or James Washington at 301-713-1284
- PRC, Inc., Hoi Chong at 703-883-8567

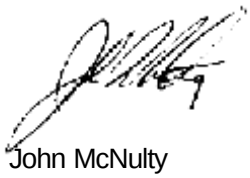

John McNulty
Chief, Engineering Division

Attachments

ATTACHMENT A

List of Affected RFC Sites for WAN Upgrade

RFC Site Location	Site ID
Cincinnati, OH	TIR
Minneapolis, MN	MSR
Kansas City. MO	KRF
Tulsa, OK.	TUA
Sacramento, CA	RSA
Salt Lake City, UT	STR
Ft. Worth, TX	FWR
New Orleans, LA	ORN
Atlanta, GA	ALR

ATTACHMENT B

WS FORM A-26 (4/94)

WS FORM A-26 (4/94)

U.S. DEPARTMENT OF COMMERCE
NATIONAL OCEANIC AND ATMOSPHERIC ADMINISTRATION
NATIONAL WEATHER SERVICE

ENGINEERING MANAGEMENT REPORTING SYSTEM
MAINTENANCE RECORD

Document Number: **G 49978**

General Information	1. Open Date	Time	2. Initials	3. Response Priority (check one)	4. Close Date	Time
	7 / 24 / 00	0900	JMM	○ Immediate ○ Low ○ Routine ☒ Not Applicable	7 / 24 / 00	1000

5. Description

PERFORM MODIFICATION I.A.W. AWIPS CONTRACTOR INTERFACE NOTE 7

Equipment Information	6. Station ID	7. Equipment Code	8. Serial Number	9. TM	10. AT	11. How Mal.
	CTP	AWIPS	001	M	M	999

12. ***EQUIPMENT OPERATIONAL STATUS TIMES***	a. **Fully Operational**	b. Logistics Delay	**Partly Operational**	c. All Other	d. Logistics Delay	**Not Operational**	e. All Other

13. *Parts Failure Information*

Block #	a. ASN	b. NSN	c. TM	d. AT	e. How Mal.	f. Qty.	g. Maint. Hrs.
1							
2							
3							
4							
5							

14. *Work Load Information*

Type	Staff Hrs.
a. Routine	
b. Non-routine	
c. Travel	
d. Misc.	1:00
e. Overtime	

Miscellaneous Information	15. Maintenance Comments	16. Initials
	Connected CSU/DSU cables to new FTS2000 CSU/DSU I.A.W. AWIPS Contractor Interface Note 7.	JMM

17. ***SPECIAL PURPOSE REPORTING***	a. Mod. No.	b. Mod./Act./Deact.Date	c.	d.	e.
	C7	7/24/00			

18. ***CONFIGURATION MGMT. REPORTING*** *(use as directed)*	ASN	Vendor Part Number (New Part)	Serial Number (Old Part)	Serial Number (New Part)

Sample